Panasonic®

PC Programming Manual

Hybrid IP-PBX

Model No. KX-NS300CN

Thank you for purchasing this Panasonic product.
Please read this manual carefully before using this product and save this manual for future use.
In particular, be sure to read "1.1.1 For Your Safety (Page 14)" before using this product.

KX-NS300: PFMPR Software File Version 001.05000 or later

Introduction

About this Programming Manual

The PC Programming Manual is designed to serve as a system programming reference for the Panasonic IP-PBX. It explains how to programme this PBX using Web Maintenance Console.
The PC Programming Manual is divided into the following sections:

Section 1, Overview

Provides an overview of programming the PBX.

Section 2, Introduction of Web Maintenance Console

Explains the layout and menus of Web Maintenance Console.

Sections 3 – 27, Web Maintenance Console Operating Instructions

Serves as reference operating instructions when using Web Maintenance Console to programme the PBX.

Feature Programming References

Provides a list of all related programming items for each feature.

References Found in the PC Programming Manual

PC Programming Manual References

Related sections of the PC Programming Manual are listed for your reference.

Feature Guide References

The Feature Guide explains what the PBX can do, as well as how to obtain the most of its many features and facilities. Sections from the Feature Guide are listed throughout this manual for your reference.

Installation Manual References

The Installation Manual provides instructions detailing the installation and maintenance of the PBX. Sections from the Installation Manual are listed throughout this manual for your reference.

Links to Other Pages and Manuals

If you are viewing this manual with a PC, certain items are linked to different sections of this and other PBX manuals. Click on a link to jump to that section.
Linked items include:

- Installation Manual References
- PC Programming Manual References
- Feature Guide References

Trademarks

- Microsoft, Outlook, Internet Explorer, Windows and Windows Vista are either registered trademarks or trademarks of Microsoft Corporation in the United States and/or other countries.
- Intel and Intel Core are trademarks of Intel Corporation in the U.S. and other countries.
- Mozilla and Firefox are registered trademarks of the Mozilla Foundation.
- All other trademarks identified herein are the property of their respective owners.
- Microsoft product screen shot(s) reprinted with permission from Microsoft Corporation.

Notice

- During a long programming session, it is highly recommended that you periodically save the system data to the System Memory. If the PBX undergoes a sudden power failure or if the system is reset for some reason, all the system data in RAM will be lost. However, if system data has been saved to the System Memory, it can be easily reloaded.
- To save the system data to the System Memory, (1) click the 💾 button on the Home screen of Web Maintenance Console before resetting the PBX or turning off the power, or (2) logout from Web Maintenance Console so that the PBX automatically saves the system data.

NOTES

- The contents of this manual apply to PBXs with a certain software version, as indicated on the cover of this manual. To confirm the software version of your PBX, see **How do I confirm the software version of the PBX or installed cards?** in **Maintenance Console Software** in **2.3 Frequently Asked Questions (FAQ)**.
- Some optional hardware, software, and features are not available in some countries/areas, or for some PBX models. Please consult your certified Panasonic dealer for more information.
- Product specifications, including text displayed by the software, are subject to change without notice.
- In this manual, the suffix of each model number (e.g., KX-NS300**CN**) is omitted unless necessary.

Table of Contents

1 Overview 13

1.1 Introduction 14
1.1.1 For Your Safety 14
1.1.2 Introduction 16
1.1.3 Entering Characters 17
1.2 PC Programming 21
1.2.1 Starting Web Maintenance Console 21
1.2.2 PC Programming Using Off-line Mode 24
1.2.2.1 Editing and Printing Terminal Labels in Off-line Mode 29

2 Introduction of Web Maintenance Console 31

2.1 Introduction 32
2.1.1 Web Maintenance Console Accounts 32
2.1.2 Access Levels 34
2.1.3 Logging in to Web Maintenance Console 37
2.1.4 Easy Setup Wizard 38
2.1.5 Card Status 39
2.1.6 Extension Number Setting 40
2.2 Logout 41
2.3 Frequently Asked Questions (FAQ) 42

3 Web Maintenance Console Home Screen 51

3.1 Home Screen 52

4 Status 57

4.1 Status—Equipment Status 58
4.1.1 Status—Equipment Status—UPS 58
4.1.2 Status—Equipment Status—CS Information 59
4.1.3 Status—Equipment Status—PS Information 60
4.1.4 Status—Equipment Status—UM Port status 61
4.1.5 Status—Equipment Status—USB 62

5 System Control 63

5.1 System Control—Program Update 64
5.1.1 System Control—Program Update—Download Program File 65
5.1.2 System Control—Program Update—Update Program File 67
5.1.3 System Control—Program Update—Plug and Update 68
5.2 System Control—MOH 69
5.2.1 System Control—MOH—Install 69
5.2.2 System Control—MOH—Delete 70
5.2.3 System Control—MOH—Status / Backup 71
5.3 System Control—System Reset 72
5.4 System Control—System Shutdown 73

6 Tool 75

6.1 Tool—System Data Backup 76
6.1.1 Tool—System Data Backup—Backup to USB 76
6.1.2 Tool—System Data Backup—Backup to NAS 77
6.2 Tool—NDSS Link Data Clear 78
6.3 Tool—Call Pickup for My Group 79
6.4 Tool—Extension List View 80
6.5 Tool—Import 81

6.6 Tool—Export 86
6.7 Tool—Screen Customise 87
6.8 Tool—UM Data Backup 88
6.8.1 Tool—UM Data Backup—Manual Backup 89
6.8.2 Tool—UM Data Backup—Scheduled Backup 90
6.9 Tool—UM Data Restore 91
6.10 Tool—UM Backup History 93
6.11 Tool—DXDP All OUS 94
6.12 Tool—Contact information 95
6.13 Tool—UT Option Setting 96
6.14 Tool—URL Information 97
6.15 Tool—SVM (Simplified Voice Message) 98
6.15.1 Tool—SVM (Simplified Voice Message)—Delete All Recording 98
6.15.2 Tool—SVM (Simplified Voice Message)—Check Current Usage 98

7 Utility 99

7.1 Utility—Diagnosis 100
7.1.1 Utility—Diagnosis—Card Diagnosis 100
7.1.2 Utility—Diagnosis—Ping 101
7.2 Utility—File 102
7.2.1 Utility—File—File Transfer PC to PBX 102
7.2.2 Utility—File—File Transfer PBX to PC 103
7.2.3 Utility—File—File View 104
7.2.4 Utility—File—File Delete 105
7.2.5 Utility—File—Message File Transfer PC to PBX 106
7.2.6 Utility—File—Message File Transfer PBX to PC 107
7.3 Utility—Log 108
7.3.1 Utility—Log—Error Log 108
7.3.2 Utility—Log—Syslog 110
7.3.3 Utility—Log—Web-MC Event Log 111
7.3.4 Utility—Log—UM System Log 112
7.3.5 Utility—Log—Call Control Log 113
7.4 Utility—Monitor/Trace 114
7.4.1 Utility—Monitor/Trace—ISDN/QSIG Protocol Trace 114
7.4.2 Utility—Monitor/Trace—V-IPGW Protocol Trace 115
7.4.3 Utility—Monitor/Trace—V-SIPGW Protocol Trace 116
7.4.4 Utility—Monitor/Trace—CS Status Monitor 117
7.4.5 Utility—Monitor/Trace—UM System Trace (Internal) 118
7.4.6 Utility—Monitor/Trace—E1 Signalling Bit Monitor 119
7.4.7 Utility—Monitor/Trace—E1 Line Trace 120
7.5 Utility—Report 121
7.5.1 Utility—Report—Digital Trunk Error Report 121
7.5.2 Utility—Report—IP Extension Statistical Information 122
7.5.3 Utility—Report—UM View Reports 123
7.5.4 Utility—Report—E-mail Report 126
7.6 Utility—Activation Key Installation 127
7.7 Utility—Email Notification 128
7.7.1 Utility—Email Notification—Alert 128
7.7.2 Utility—Email Notification—System Analysis 129
7.7.3 Utility—Email Notification—Test Email 130
7.8 Utility—Command 131
7.8.1 Utility—Command—UM Command 131
7.9 Utility—UM – System Prompts Customisation 132
7.10 Utility—Automatic Two-way Recording 134
7.10.1 Utility—Automatic Two-way Recording—Supervisor Setting 134

7.10.2 Utility—Automatic Two-way Recording—Extension Setting 135
7.10.3 Utility—Automatic Two-way Recording—Extension Setting List 136
7.10.4 Utility—Automatic Two-way Recording—Maintenance 139
7.11 Utility—UM - System Maintenance 140

8 Users 141

8.1 Users—User Profiles 142
8.1.1 Users—User Profiles—Advanced setting 144
8.2 Users—Add User 148
8.2.1 Users—Add User—Single User 148
8.2.2 Users—Add User—Multiple Users 152
8.3 Users—Automatic Two-way Recording 153
8.3.1 Users—Automatic Two-way Recording—Edit a Recording 153
8.3.2 Users—Automatic Two-way Recording—Record List 154
8.4 Users—ICDG Management 155
8.4.1 Users—ICDG Management—Group Monitor 155
8.4.2 Users—ICDG Management—ACD Report 157

9 PBX Configuration—[1] Configuration 165

9.1 PBX Configuration—[1-1] Configuration—Slot 166
9.2 PBX Configuration—[1-1] Configuration—Slot—System Property 172
9.2.1 PBX Configuration—[1-1] Configuration—Slot—System Property—Main 172
9.2.2 PBX Configuration—[1-1] Configuration—Slot—System Property—Site 180
9.2.3 PBX Configuration—[1-1] Configuration—Slot—System Property—Slot Summary 200
9.2.4 PBX Configuration—[1-1] Configuration—Slot—System Property—NSVM 202
9.3 PBX Configuration—[1-1] Configuration—Slot—Activation Key Status 206
9.4 PBX Configuration—[1-1] Configuration—Slot—VoIP Property 208
9.4.1 PBX Configuration—[1-1] Configuration—Slot—VoIP Property—VoIP (Ext) Setting 208
9.4.2 PBX Configuration—[1-1] Configuration—Slot—VoIP Property—VoIP (Trunk) Setting 210
9.5 PBX Configuration—[1-1] Configuration—Slot—UM Card Property 213
9.6 PBX Configuration—[1-1] Configuration—Slot—UM Port Property 215
9.7 PBX Configuration—[1-1] Configuration—Slot—Port Property—Port Type View 216
9.8 PBX Configuration—[1-1] Configuration—Slot—V-SIPGW—Shelf Property 217
9.9 PBX Configuration—[1-1] Configuration—Slot—V-SIPGW—Card Property 221
9.10 PBX Configuration—[1-1] Configuration—Slot—V-SIPGW—Port Property 222
9.11 PBX Configuration—[1-1] Configuration—Slot—V-IPGW—Shelf Property 242
9.11.1 PBX Configuration—[1-1] Configuration—Slot—V-IPGW—Shelf Property—GK Settings 251
9.11.2 PBX Configuration—[1-1] Configuration—Slot—V-IPGW—Shelf Property—Hunt Pattern 252
9.12 PBX Configuration—[1-1] Configuration—Slot—V-IPGW—Port Property 253
9.13 PBX Configuration—[1-1] Configuration—Slot—V-IPEXT—Card Property 255
9.14 PBX Configuration—[1-1] Configuration—Slot—V-IPEXT—Port Property 259
9.15 PBX Configuration—[1-1] Configuration—Slot—V-SIPEXT—Card Property 268
9.16 PBX Configuration—[1-1] Configuration—Slot—V-SIPEXT—Port Property 270
9.17 PBX Configuration—[1-1] Configuration—Slot—V-IPCS—Card Property 278
9.18 PBX Configuration—[1-1] Configuration—Slot—V-IPCS—Port Property 281
9.19 PBX Configuration—[1-1] Configuration—Slot—V-UTEXT—Card Property 285
9.20 PBX Configuration—[1-1] Configuration—Slot—V-UTEXT—Port Property 287
9.21 PBX Configuration—[1-1] Configuration—Slot—Extension—Card Property 295
9.22 PBX Configuration—[1-1] Configuration—Slot—Extension—Port Property 298

9.23 PBX Configuration—[1-1] Configuration—Slot—Card Property - LCO type 302
9.24 PBX Configuration—[1-1] Configuration—Slot—Port Property - LCO Port 308
9.25 PBX Configuration—[1-1] Configuration—Slot—Card Property - PRI type 311
9.26 PBX Configuration—[1-1] Configuration—Slot—Port Property - PRI Port 317
9.27 PBX Configuration—[1-1] Configuration—Slot—Card Property—E1 type 326
9.28 PBX Configuration—[1-1] Configuration—Slot—Card Property—E1 type Line Signal Setting 328
9.29 PBX Configuration—[1-1] Configuration—Slot—Card Property—E1 type MFC-R2 Setting 1 331
9.30 PBX Configuration—[1-1] Configuration—Slot—Card Property—E1 type MFC-R2 Setting 2 334
9.31 PBX Configuration—[1-1] Configuration—Slot—Port Property—E1 Port 337
9.32 PBX Configuration—[1-1] Configuration—Slot—Expansion Unit1/Expansion Unit2/ Expansion Unit3 341
9.33 PBX Configuration—[1-1] Configuration—Slot—DOORPHONE Card—Card Property 343
9.34 PBX Configuration—[1-2] Configuration—Portable Station 344
9.35 PBX Configuration—[1-3] Configuration—Option 346
9.36 PBX Configuration—[1-4] Configuration—Clock Priority 347
9.37 PBX Configuration—[1-5] Configuration—DSP Resource 348
9.37.1 PBX Configuration—[1-5-1] Configuration—DSP Resource—Setting 348
9.37.1.1 PBX Configuration—[1-5-1] Configuration—DSP Resource—Setting—DSP Resource Advisor 351
9.37.2 PBX Configuration—[1-5-2] Configuration—DSP Resource—Usage 352

10 PBX Configuration—[2] System 353

10.1 PBX Configuration—[2-1] System—Date & Time 354
10.1.1 PBX Configuration—[2-1-1] System—Date & Time—Date & Time Setting 354
10.1.2 PBX Configuration—[2-1-2] System—Date & Time—SNTP / Daylight Saving 355
10.1.2.1 PBX Configuration—[2-1-2] System—Date & Time—SNTP / Daylight Saving—Daylight Saving 357
10.2 PBX Configuration—[2-2] System—Operator & BGM 359
10.3 PBX Configuration—[2-3] System—Timers & Counters 360
10.4 PBX Configuration—[2-4] System—Week Table 375
10.4.1 PBX Configuration—[2-4] System—Week Table—Time Setting 375
10.5 PBX Configuration—[2-5] System—Holiday Table 377
10.6 PBX Configuration—[2-6] System—Numbering Plan 379
10.6.1 PBX Configuration—[2-6-1] System—Numbering Plan—Main 379
10.6.2 PBX Configuration—[2-6-2] System—Numbering Plan—Quick Dial 401
10.6.3 PBX Configuration—[2-6-3] System—Numbering Plan—B/NA DND Call Feature 402
10.7 PBX Configuration—[2-7] System—Class of Service 405
10.7.1 PBX Configuration—[2-7-1] System—Class of Service—COS Settings 405
10.7.2 PBX Configuration—[2-7-2] System—Class of Service—External Call Block 418
10.7.3 PBX Configuration—[2-7-3] System—Class of Service—Internal Call Block 419
10.8 PBX Configuration—[2-8] System—Ring Tone Patterns 420
10.8.1 PBX Configuration—[2-8-1] System—Ring Tone Patterns—Call from CO 420
10.8.2 PBX Configuration—[2-8-2] System—Ring Tone Patterns—Call from DOORPHONE 421
10.8.3 PBX Configuration—[2-8-3] System—Ring Tone Patterns—Call from Others 422
10.9 PBX Configuration—[2-9] System—System Options 424
10.10 PBX Configuration—[2-10] System—Extension CID Settings 447
10.11 PBX Configuration—[2-11] System—Audio Gain 450
10.11.1 PBX Configuration—[2-11-1] System—Audio Gain—Paging/MOH 450
10.11.2 PBX Configuration—[2-11-2] System—Audio Gain—Card 452

11 PBX Configuration—[3] Group 453

11.1 PBX Configuration—[3-1] Group—Trunk Group 454
11.1.1 PBX Configuration—[3-1-1] Group—Trunk Group—TRG Settings 454
11.1.2 PBX Configuration—[3-1-2] Group—Trunk Group—Local Access Priority 460
11.1.3 PBX Configuration—[3-1-3] Group—Trunk Group—Caller ID Modification 461
11.1.4 PBX Configuration—[3-1-4] Group—Trunk Group—Dialling Plan 465
11.1.4.1 PBX Configuration—[3-1-4] Group—Trunk Group—Dialling Plan—Auto Assign 467
11.1.5 PBX Configuration—[3-1-5] Group—Trunk Group—Charge Rate 468
11.2 PBX Configuration—[3-2] Group—User Group 469
11.3 PBX Configuration—[3-3] Group—Call Pickup Group 470
11.3.1 PBX Configuration—[3-3] Group—Call Pickup Group—All Setting 471
11.4 PBX Configuration—[3-4] Group—Paging Group 472
11.4.1 PBX Configuration—[3-4] Group—Paging Group—All Setting 473
11.4.2 PBX Configuration—[3-4] Group—Paging Group—External Pager 474
11.5 PBX Configuration—[3-5] Group—Incoming Call Distribution Group 475
11.5.1 PBX Configuration—[3-5-1] Group—Incoming Call Distribution Group—Group Settings 475
11.5.1.1 PBX Configuration—[3-5-1] Group—Incoming Call Distribution Group—Group Settings—Member List 484
11.5.2 PBX Configuration—[3-5-2] Group—Incoming Call Distribution Group—Queuing Time Table 486
11.5.3 PBX Configuration—[3-5-3] Group—Incoming Call Distribution Group—Miscellaneous 487
11.5.4 PBX Configuration–[3-5-4] Group—Incoming Call Distribution Group—ACD Supervisor 491
11.6 PBX Configuration—[3-6] Group—Extension Hunting Group 492
11.6.1 PBX Configuration—[3-6] Group—Extension Hunting Group—Member List 493
11.7 PBX Configuration—[3-7] Group—UM Group 494
11.7.1 PBX Configuration—[3-7-1] Group—UM Group—System Settings 494
11.7.2 PBX Configuration—[3-7-2] Group—UM Group—Unit Settings 496
11.7.2.1 PBX Configuration—[3-7-2] Group—UM Group—Unit Settings—Member List 497
11.8 PBX Configuration—[3-8] Group—PS Ring Group 498
11.8.1 PBX Configuration—[3-8] Group—PS Ring Group—Member List 499
11.9 PBX Configuration—[3-9] Group—Conference Group 500
11.9.1 PBX Configuration—[3-9] Group—Conference Group—Member List 502
11.10 PBX Configuration—[3-10] Group—P2P Group 503
11.11 PBX Configuration—[3-11] Group—VM(DPT) Group 504
11.11.1 PBX Configuration—[3-11-1] Group—VM(DPT) Group—System Settings 504
11.11.2 PBX Configuration—[3-11-2] Group—VM(DPT) Group—Unit Settings 506
11.11.2.1 PBX Configuration—[3-11-2] Group—VM(DPT) Group—Unit Settings—Member List 508
11.12 PBX Configuration—[3-12] Group—VM(DTMF) Group 511
11.12.1 PBX Configuration—[3-12-1] Group—VM(DTMF) Group—System Settings 511
11.12.2 PBX Configuration—[3-12-2] Group—VM(DTMF) Group—Group Settings 515
11.12.2.1 PBX Configuration—[3-12-2] Group—VM(DTMF) Group—Group Settings—Member List 516

12 PBX Configuration—[4] Extension 517

12.1 PBX Configuration—[4-1] Extension—Wired Extension 518
12.1.1 PBX Configuration—[4-1-1] Extension—Wired Extension—Extension Settings 518
12.1.1.1 PBX Configuration—[4-1-1] Extension—Wired Extension—Extension Settings—CLIP Generate 540
12.1.2 PBX Configuration—[4-1-2] Extension—Wired Extension—FWD/DND 542

12.1.3 PBX Configuration—[4-1-3] Extension—Wired Extension—Speed Dial 543
12.1.4 PBX Configuration—[4-1-4] Extension—Wired Extension—Flexible Button 544
12.1.4.1 PBX Configuration—[4-1-4] Extension—Wired Extension—Flexible Button—Flexible button data copy 552
12.1.5 PBX Configuration—[4-1-5] Extension—Wired Extension—PF Button 553
12.1.6 PBX Configuration—[4-1-6] Extension—Wired Extension—NDSS Link Data - Send 554
12.1.7 PBX Configuration—[4-1-7] Extension—Wired Extension—CLIP ID Table 555
12.1.8 PBX Configuration-[4-1-8] Extension-Wired Extension-Simplified Voice Message 556
12.2 PBX Configuration—[4-2] Extension—Portable Station 558
12.2.1 PBX Configuration—[4-2-1] Extension—Portable Station—Extension Settings 558
12.2.1.1 PBX Configuration—[4-2-1] Extension—Portable Station—Extension Settings—CLIP Generate 579
12.2.2 PBX Configuration—[4-2-2] Extension—Portable Station—FWD/DND 581
12.2.3 PBX Configuration—[4-2-3] Extension—Portable Station—Flexible Button 582
12.2.3.1 PBX Configuration—[4-2-3] Extension—Portable Station—Flexible Button—Flexible button data copy 589
12.2.4 PBX Configuration—[4-2-4] Extension—Portable Station—NDSS Link Data - Send 590
12.2.5 PBX Configuration—[4-2-5] Extension—Portable Station—CLIP ID Table 591
12.2.6 PBX Configuration-[4-2-6] Extension—Portable Station—Simplified Voice Message 592
12.3 PBX Configuration—[4-3] Extension—DSS Console 594
12.3.1 PBX Configuration—[4-3] Extension—DSS Console—DSS key data copy 601

13 PBX Configuration—[5] Optional Device 603

13.1 PBX Configuration—[5-1] Optional Device—Doorphone 604
13.2 PBX Configuration—[5-2] Optional Device—External Pager 607
13.3 PBX Configuration—[5-3] Optional Device—Voice Message 608
13.3.1 PBX Configuration—[5-3-1] Optional Device—Voice Message—DISA System 608
13.3.2 PBX Configuration—[5-3-2] Optional Device—Voice Message—DISA Message 613
13.3.3 PBX Configuration—[5-3-3] Option Device—Voice Message—SVM 615
13.4 PBX Configuration—[5-4] Optional Device—External Relay 618
13.5 PBX Configuration—[5-5] Optional Device—External Sensor 620

14 PBX Configuration—[6] Feature 623

14.1 PBX Configuration—[6-1] Feature—System Speed Dial 624
14.2 PBX Configuration—[6-2] Feature—Hotel & Charge 626
14.3 PBX Configuration—[6-3] Feature—Verification Code 633
14.4 PBX Configuration—[6-4] Feature—Second Dial Tone 635
14.5 PBX Configuration—[6-5] Feature—Absent Message 636
14.6 PBX Configuration—[6-6] Feature—Tenant 637

15 PBX Configuration—[7] TRS 639

15.1 PBX Configuration—[7-1] TRS—Denied Code 640
15.2 PBX Configuration—[7-2] TRS—Exception Code 641
15.3 PBX Configuration—[7-3] TRS—Special Carrier 642
15.4 PBX Configuration—[7-4] TRS—Emergency Dial 643
15.5 PBX Configuration—[7-5] TRS—Miscellaneous 644

16 PBX Configuration—[8] ARS 647

16.1 PBX Configuration—[8-1] ARS—System Setting 648
16.2 PBX Configuration—[8-2] ARS—Leading Number 649
16.3 PBX Configuration—[8-3] ARS—Routing Plan Time 650

16.3.1 PBX Configuration—[8-3] ARS—Routing Plan Time—Time Setting 651
16.4 PBX Configuration—[8-4] ARS—Routing Plan Priority 652
16.5 PBX Configuration—[8-5] ARS—Carrier 653
16.6 PBX Configuration—[8-6] ARS—Leading Number Exception 656
16.7 PBX Configuration—[8-7] ARS—Authorisation Code for TRG 657

17 PBX Configuration—[9] Private Network 659

17.1 PBX Configuration—[9-1] Private Network—TIE Table 660
17.2 PBX Configuration—[9-2] Private Network—Network Data Transmission 662
17.3 PBX Configuration—[9-3] Private Network—Network Operator (VoIP) 665
17.4 PBX Configuration—[9-4] Private Network—NDSS Key Table 666
17.5 PBX Configuration—[9-5] Private Network—Centralised UM/VM Unit 668

18 PBX Configuration—[10] CO & Incoming Call 669

18.1 PBX Configuration—[10-1] CO & Incoming Call—CO Line Settings 670
18.2 PBX Configuration—[10-2] CO & Incoming Call—DIL Table & Port Settings 671
18.3 PBX Configuration—[10-3] CO & Incoming Call—DDI / DID Table 676
18.3.1 PBX Configuration—[10-3] CO & Incoming Call—DDI / DID Table—Automatic Registration 679
18.3.2 PBX Configuration—[10-3] CO & Incoming Call—DDI / DID Table—Name Generate 681
18.4 PBX Configuration—[10-5] CO & Incoming Call—Miscellaneous 683

19 PBX Configuration—[11] Maintenance 685

19.1 PBX Configuration—[11-1] Maintenance—Main 686
19.2 PBX Configuration—[11-2] Maintenance—PT Programming Access 697
19.3 PBX Configuration—[11-3] Maintenance—Air Synchronisation 698

20 UM Configuration—[1] Mailbox Settings 703

20.1 UM Configuration—[1] Mailbox Settings 704
20.1.1 UM Configuration—[1-1] Mailbox Settings—Quick Setting 704
20.1.2 UM Configuration—[1-2] Mailbox Settings—Full Setting 706
20.1.3 UM Configuration—[1-3] Mailbox Settings—Auto Configuration 728

21 UM Configuration—[2] Class of Service 729

21.1 UM Configuration—[2] Class of Service 730

22 UM Configuration—[3] UM Extension / Trunk Service 743

22.1 UM Configuration—[3-1] UM Extension / Trunk Service—Service Group 744
22.2 UM Configuration—[3-2] UM Extension / Trunk Service—Port Assignment 746

23 UM Configuration—[4] Service Settings 747

23.1 UM Configuration—[4-1] Service Settings—Caller ID / PIN Call Routing 748
23.2 UM Configuration—[4-2] Service Settings—Parameters 751
23.3 UM Configuration—[4-3] Service Settings—Custom Service 758
23.3.1 UM Configuration—[4-3] Service Settings—Custom Service—Menu & Transfer 760
23.3.2 UM Configuration—[4-3] Service Settings—Custom Service—Date Control 764
23.3.3 UM Configuration—[4-3] Service Settings—Custom Service—Time Control 765
23.3.4 UM Configuration—[4-3] Service Settings—Custom Service—Day Control 766
23.3.5 UM Configuration—[4-3] Service Settings—Custom Service—Password 767
23.4 UM Configuration—[4-4] Service Settings—Holiday Table 770

24 UM Configuration—[5] System Parameters 775

24.1 UM Configuration—[5-1] System Parameters—Mailbox Group 776
24.2 UM Configuration—[5-2] System Parameters—Extension Group 778

24.3 UM Configuration—[5-3] System Parameters—System Caller Name Announcement 780
24.4 UM Configuration—[5-4] System Parameters—Parameters 782

25 UM Configuration—[6] H/W Settings 799
25.1 UM Configuration—[6] H/W Settings 800

26 UM Configuration—[7] System Security 801
26.1 UM Configuration—[7] System Security 802

27 Network Service 805
27.1 Network Service—[1] IP Address/Ports 806
27.2 Network Service—[2] Server Feature 810
27.2.1 Network Service—[2-1] Server Feature—DHCP 810
27.2.2 Network Service—[2-2] Server Feature—FTP 812
27.2.3 Network Service—[2-4] Server Feature—HTTP 814
27.2.4 Network Service—[2-5] Server Feature—NTP 815
27.2.5 Network Service—[2-6] Server Feature—SMTP 816
27.2.6 Network Service—[2-7] Server Feature—IMAP4 818
27.3 Network Service—[3] Client Feature 819
27.3.1 Network Service—[3-1] Client Feature—FTP 819
27.3.2 Network Service—[3-2] Client Feature—Syslog 821
27.3.3 Network Service—[3-3] Client Feature—SNMP Agent 822
27.4 Network Service—[4] Other 826
27.4.1 Network Service—[4-1] Other—Security 826
27.4.2 Network Service—[4-2] Other—NAS 827

Feature Programming References 829

Section 1

Overview

This section provides an overview of programming the PBX.

1.1 Introduction

1.1.1 For Your Safety

To prevent personal injury and/or damage to property, be sure to observe the following safety precautions. **The following symbols classify and describe the level of hazard and injury caused when this unit is operated or handled improperly.**

⚠ **WARNING**	This notice means that misuse could result in death or serious injury.
⚠ **CAUTION**	This notice means that misuse could result in injury or damage to property.

The following types of symbols are used to classify and describe the type of instructions to be observed.

⃠	This symbol is used to alert users to a specific operating procedure that must not be performed.
❗	This symbol is used to alert users to a specific operating procedure that must be followed in order to operate the unit safely.

⚠ WARNING

- Unplug the PBX from the AC outlet if it emits smoke, an abnormal smell or makes unusual noise. These conditions can cause fire or electric shock. Confirm that smoke has stopped and contact an authorised Panasonic Factory Service Centre.

⚠ CAUTION

- ***To the Administrator or Installer regarding account passwords***
  1. Please provide all system passwords to the customer.
  2. To avoid unauthorised access and possible abuse of the PBX, keep the passwords secret, and inform the customer of the importance of the passwords, and the possible dangers if they become known to others.
  3. The PBX has no passwords set initially. For security, select an installer password as soon as the PBX system is installed at the site.
  4. Change the passwords periodically.
  5. It is strongly recommended that passwords of 10 numbers or characters be used for maximum protection against unauthorised access.
- There is a risk that fraudulent telephone calls will be made if a third party discovers a personal identification number (PIN) (verification code PIN or extension PIN) of the PBX.
  The cost of such calls will be billed to the owner/renter of the PBX.
  To protect the PBX from this kind of fraudulent use, we strongly recommend:
  a. Keeping PINs secret.
  b. Selecting complex, random PINs that cannot be easily guessed.
  c. Changing PINs frequently.

1.1.2 Introduction

These programming instructions are designed to serve as an overall system programming reference for the PBX. Each feature in the PBX has default settings that can be changed to customise the PBX to your requirements. These settings control the functions of the PBX, and changing them is referred to as "system programming".
Programming can be performed by system installers, on-site managers, and individual users. However, managers and individual users may only change a limited number of settings. For details, see **2.1.1 Web Maintenance Console Accounts**.
All features and settings of the PBX can be programmed through system programming with Web Maintenance Console. Starting Web Maintenance Console is described in **1.2 PC Programming**. Individual system programming items are described from **Section 3 Web Maintenance Console Home Screen**.

Programming Modes

There are two different modes available for programming using Web Maintenance Console:

- **On-line Mode**
  On-line mode allows you to use Web Maintenance Console on a PC that is connected to the PBX to modify the system data and settings used by the PBX. Settings can be modified and results are displayed in real time. Modifications to settings change the information in the PBX's temporary memory (DRAM). To finalise the changes, you must either save the changes to the PBX's System Memory by clicking or log out of Web Maintenance Console by clicking . For details, see **Web Maintenance Console Features** in **3.1 Home Screen**.
- **Off-line Mode**
  Off-line mode allows you to connect to a version of Web Maintenance Console running on your PC. Using Off-line mode, you can create new system data files and make modifications to system data files stored on your PC, without being connected to the PBX. After you finish configuring settings, they can be saved and uploaded to the PBX, which will update the PBX's settings. For details, see **Uploading Programmed Settings to the PBX** in **1.2.2 PC Programming Using Off-line Mode**.

1.1.3 Entering Characters

The characters on a white background below can be used when storing a name, message, password or other text entry data using a PC. The available characters vary according to the model of PBX.

Note

For NE models, the tables differ depending on the Area Code selected in Easy Setup.

Table 1 (Standard)

	00	01	02	03	04	05	06	07	08	09	0A	0B	0C	0D	0E	0F
20	SP	!	"	#	$	%	&	'	(	)	*	+	,	-	.	/
30	0	1	2	3	4	5	6	7	8	9	:	;	<	=	>	?
40	@	A	B	C	D	E	F	G	H	I	J	K	L	M	N	O
50	P	Q	R	S	T	U	V	W	X	Y	Z	[	/	]	^	_
60	`	a	b	c	d	e	f	g	h	i	j	k	l	m	n	o
70	p	q	r	s	t	u	v	w	x	y	z	{	|	}	~	DEL
80	€		‚	ƒ	„	…	†	‡	ˆ	‰	Š	≤	Œ		Ž	
90		‘	’	“	”	•	–	—	˜	™	š	≥	œ		ž	Ÿ
A0	NBSP	¡	¢	£	¤	¥	¦	§	¨	©	ª	«	¬	SHY	®	¯
B0	°	±	²	³	´	µ	¶	·	¸	¹	º	»	¼	½	¾	¿
C0	À	Á	Â	Ã	Ä	Å	Æ	Ç	È	É	Ê	Ë	Ì	Í	Î	Ï
D0	Ð	Ñ	Ò	Ó	Ô	Õ	Ö	×	Ø	Ù	Ú	Û	Ü	Ý	Þ	ß
E0	à	á	â	ã	ä	å	æ	ç	è	é	ê	ë	ì	í	î	ï
F0	ð	ñ	ò	ó	ô	õ	ö	÷	ø	ù	ú	û	ü	ý	þ	ÿ

Table 2 (For NE model)

	00	01	02	03	04	05	06	07	08	09	0A	0B	0C	0D	0E	0F
20	SP	!	"	#	$	%	&	'	(	)	*	+	,	-	.	/
30	0	1	2	3	4	5	6	7	8	9	:	;	<	=	>	?
40	@	A	B	C	D	E	F	G	H	I	J	K	L	M	N	O
50	P	Q	R	S	T	U	V	W	X	Y	Z	[	/	]	^	_
60	`	a	b	c	d	e	f	g	h	i	j	k	l	m	n	o
70	p	q	r	s	t	u	v	w	x	y	z	{	|	}	~	DEL
80	€		‚		„	…	†	‡		‰	Š	‹	Ś	Ť	Ž	Ź
90		‘	’	“	”	•	–	—		™	š	›	ś	ť	ž	ź
A0	NBSP	ˇ	˘	Ł	¤	Ą	¦	§	¨	©	Ş	«	¬	SHY	®	Ż
B0	°	±	˛	ł	´	µ	¶	·	¸	ą	ş	»	Ľ	˝	ľ	ż
C0	Ŕ	Á	Â	Ă	Ä	Ĺ	Ć	Ç	Č	É	Ę	Ë	Ě	Í	Î	Ď
D0	Đ	Ń	Ň	Ó	Ô	Ő	Ö	×	Ř	Ů	Ú	Ű	Ü	Ý	Ţ	ß
E0	ŕ	á	â	ă	ä	ĺ	ć	ç	č	é	ę	ë	ě	í	î	ď
F0	đ	ń	ň	ó	ô	ő	ö	÷	ř	ů	ú	ű	ü	ý	ţ	˙

Table 3 (For RU/UC model)

	00	01	02	03	04	05	06	07	08	09	0A	0B	0C	0D	0E	0F
20	SP	!	"	#	$	%	&	'	(	)	*	+	,	-	.	/
30	0	1	2	3	4	5	6	7	8	9	:	;	<	=	>	?
40	@	A	B	C	D	E	F	G	H	I	J	K	L	M	N	O
50	P	Q	R	S	T	U	V	W	X	Y	Z	[	/	]	^	_
60	`	a	b	c	d	e	f	g	h	i	j	k	l	m	n	o
70	p	q	r	s	t	u	v	w	x	y	z	{	|	}	~	DEL
80	Ђ	Ѓ	‚	ѓ	„	…	†	‡	€	‰	Љ	‹	Њ	Ќ	Ћ	Џ
90	ђ	‘	’	“	”	•	–	—	™	љ	›	њ	ќ	ћ	џ	
A0	NBSP	Ў	ў	J	¤	Ґ	¦	§	Ё	©	Є	«	¬	SHY	®	Ї
B0	°	±	I	i	ґ	µ	¶	·	ё	№	є	»	j	S	s	ї
C0	А	Б	В	Г	Д	Е	Ж	З	И	Й	К	Л	М	Н	О	П
D0	Р	С	Т	У	Ф	Х	Ц	Ч	Ш	Щ	Ъ	Ы	Ь	Э	Ю	Я
E0	а	б	в	г	д	е	ж	з	и	й	к	л	м	н	о	п
F0	р	с	т	у	ф	х	ц	ч	ш	щ	ъ	ы	ь	э	ю	я

Table 4 (For Greece)

	00	01	02	03	04	05	06	07	08	09	0A	0B	0C	0D	0E	0F
20	SP	!	"	#	$	%	&	'	(	)	*	+	,	-	.	/
30	0	1	2	3	4	5	6	7	8	9	:	;	<	=	>	?
40	@	A	B	C	D	E	F	G	H	I	J	K	L	M	N	O
50	P	Q	R	S	T	U	V	W	X	Y	Z	[	/	]	^	_
60	`	a	b	c	d	e	f	g	h	i	j	k	l	m	n	o
70	p	q	r	s	t	u	v	w	x	y	z	{	|	}	~	DEL
80	€		‚	*ƒ*	„	…	†	‡		‰		‹				
90		‘	’	“	”	•	–	—		™		›				
A0	NBSP	΄	Ά	£	¤	¥	¦	§	¨	©		«	¬	SHY	®	―
B0	°	±	²	³	΄	µ	¶	·	Έ	Ή	Ί	»	Ό	½	Ύ	Ώ
C0	ΐ	Α	Β	Γ	Δ	Ε	Ζ	Η	Θ	Ι	Κ	Λ	Μ	Ν	Ξ	Ο
D0	Π	Ρ		Σ	Τ	Υ	Φ	Χ	Ψ	Ω	Ϊ	Ϋ	ά	έ	ή	ί
E0	ΰ	α	β	γ	δ	ε	ζ	η	θ	ι	κ	λ	μ	ν	ξ	ο
F0	π	ρ	ς	σ	τ	υ	φ	χ	ψ	ω	ϊ	ϋ	ό	ύ	ώ	

1.2 PC Programming

1.2.1 Starting Web Maintenance Console

System programming, diagnosis and administration can be performed with a PC using Web Maintenance Console. Web Maintenance Console is accessed through a Web browser running on a networked PC. This section describes how to set up and access Web Maintenance Console.

System Requirements

Required Operating System

- Microsoft® Windows Vista® Business, Windows® 7, Windows 7 Professional, Windows 8 or Windows 8 Professional operating system

Recommended Display Settings

- Screen resolution: XGA (1024 × 768)
- DPI setting: Normal size (96 DPI)

Supported Browsers for use with Web Maintenance Console

- Windows Internet Explorer® 8
- Windows Internet Explorer 9
- Mozilla® Firefox® version 21 or later

Always apply the latest updates to your Web browser software. For details, refer to your Web browser's documentation. Only the browsers and browser versions listed above are supported for use with Web Maintenance Console.

Note

When using Windows Internet Explorer, there may be a delay when displaying some screens of Web Maintenance Console. A message may be displayed that reads "Stop running this script?". This message is automatically displayed when a script takes a long time to complete. If this message is displayed, click **No** to continue using Web Maintenance Console. If you click **Yes**, you will have to close the browser window for Web Maintenance Console and log in again. For information about disabling this prompt, refer to your Web browser's on-line support resources.

Browser Setting Requirements

The following functions must be enabled in the Web browser's settings to use Web Maintenance Console:

- Cookies
- JavaScript
- The ability to download files
- The display of animations
- The display of images

For details regarding the above settings, refer to your Web browser's documentation.

PC Specifications (for programming in Off-line mode)

The following are recommended specifications for PCs used for programming in Off-line mode. For details about programming in Off-line mode, see **1.2.2 PC Programming Using Off-line Mode**.

	Recommended Specification
CPU	3.2 GHz Intel® Core™ 2 Duo processor or comparable CPU
RAM	2048 MB

	Recommended Specification
Hard Disk	10 GB available space

Copyright for MD5

This software uses the Source Code of RSA Data Security, Inc. described in the RFC1321 (MD5 Message-Digest Algorithm).

Copyright (C) 1991-2, RSA Data Security, Inc. Created 1991. All rights reserved.

Licence to copy and use this software is granted provided that it is identified as the "RSA Data Security, Inc. MD5 Message-Digest Algorithm" in all material mentioning or referencing this software or this function.

Licence is also granted to make and use derivative works provided that such works are identified as "derived from the RSA Data Security, Inc. MD5 Message-Digest Algorithm" in all material mentioning or referencing the derived work.

RSA Data Security, Inc. makes no representations concerning either the merchantability of this software or the suitability of this software for any particular purpose. It is provided "as is" without express or implied warranty of any kind.
These notices must be retained in any copies of any part of this documentation and/or software.

PC Connection (On-line Mode)

To connect to Web Maintenance Console in On-line mode, both the PC and the PBX must be connected. The connection can be made through a local area network (LAN), a virtual private network (VPN), or over the Internet. A PC can also be connected directly to the maintenance port of the PBX.

Connecting to Web Maintenance Console (On-line Mode)

Below is the procedure for connecting to Web Maintenance Console to programme in On-line mode:

1. Connect the PC to the PBX:
- Connect the PBX to a network with the LAN port and access the PBX from a PC in your LAN or VPN.
- Connect the PBX to a network with the LAN port and access the PBX from a PC using an Internet connection.

2. Access Web Maintenance Console:

LAN or VPN connection:
Launch your Web browser and input the IP address of the PBX followed by the Web Maintenance Console port number into the address bar. The input method will differ according to the PC's connection to the PBX. The default IP address for the LAN port of the PBX is 192.168.0.101, and the default Web Maintenance Console port number is 80. Accordingly, the address to enter to connect to the PBX for the first time will be as follows (enter the address exactly as shown):
http://192.168.0.101

MNT Port connection:
Launch your Web browser and in the address bar, enter one of the following addresses exactly as shown:
– 223.0.0.1
or
– http://kx-ns300.

Note

- If entering "http://kx-ns300.", be sure to include the period at the end as shown.
- If it takes a long time to connect when 223.0.0.1 is entered, configure a static IP address to the LAN connected to the PC.

3. The Web Maintenance Console login screen is displayed. For details about logging in, see **2.1.3 Logging in to Web Maintenance Console**.
   - If this is the first time the PBX is accessed (i.e., it is in its initialised, factory default state), you must log in using the Installer level account. Once you log in, the Easy Setup Wizard will launch. For details, see **2.1.4 Easy Setup Wizard**.
   - If the PBX has been set up using the Easy Setup Wizard, PBX system programming can be performed. To perform programming, enter the login name and password according to your status and authorisation level. For details about the differences between levels of authorisation, see **2.1.1 Web Maintenance Console Accounts**.
4. After you successfully log in to Web Maintenance Console, the Home screen will be displayed and programming can be performed. For details about accessing the different features of Web Maintenance Console, see **3.1 Home Screen**.

Connecting to Web Maintenance Console (Remote Access)

Below is the procedure for connecting to Web Maintenance Console to programme via Remote Access:

1. Connect the PC to the PBX.
   - Install the Remote card, connect the PBX to an analogue line, and access the PBX from a PC via a remote modem.
   - Connect the PBX to an ISDN line and access the PBX from a PC via an ISDN modem.

   For more details, refer to "**5.2 PC Connection—Connection via RMT Card (KX-TDA0196)**" or "**5.2 PC Connection—Connection via PRI30/E1 Card (KX-NS5290)**" in the Installation Manual.
2. Start the Off-line Web Maintenance launcher :
   Analogue Line connection:
   1) Click the **Connect-Online Mode** button.
   2) Select the **Modem** tab.
   3) Set the following:
      – Dial Number / Dial Type / Port / Baud Rate (bps) / Flow Control / Command
   4) Enter the **Password**.
   5) Click the **Connect** button.
   ISDN Line connection:
   1) Click the **Connect-Online Mode** button.
   2) Select the **ISDN Remote** tab.
   3) Enter the **Telephone Number**.
   4) Enter the **Password**.
   5) Click the **Connect** button.
3. The Web Maintenance Console login screen is displayed. For details about logging in, see **2.1.3 Logging in to Web Maintenance Console**.
4. After you successfully log in to Web Maintenance Console, the Home screen will be displayed and programming can be performed. For details about accessing the different features of Web Maintenance Console, see **3.1 Home Screen**.

Connecting to Web Maintenance Console (Off-line Mode)

To connect to Web Maintenance Console in Off-line mode, use the **New -Offline Mode** or **Open -Offline Mode** operations in the Off-line Web Maintenance Console programme launcher. For details, refer to **1.2.2 PC Programming Using Off-line Mode**.

1.2.2 PC Programming Using Off-line Mode

PC Programming is performed by connecting to the PBX using Web Maintenance Console, which is also known as On-line mode. However, as certain programming requires installed cards to be set to out of service (OUS), or requires system settings to be changed, some programming cannot be performed while the PBX is in use. Off-line mode programming is performed using the Off-line version of Web Maintenance Console, which you install on your PC.
Off-line mode allows you to create new system data files and make modifications to system data files stored on your PC, without being connected to the PBX. The programming changes can be saved and then later uploaded to the PBX.
The following procedures outline how to install and use the Off-line Web Maintenance Console for Off-line mode programming.

Installation

Note

- Be sure to install and use the latest version of "KX-NS Unified Web Maintenance Console".
- Before beginning the installation of Off-line Web Maintenance Console, the following software must be installed on the PC:
  - Microsoft .NET Framework 2.0
  - Microsoft .NET Framework 4

  This software can be downloaded from Microsoft’s online Download Center.
- To install or uninstall the software on a PC running Windows Vista Business, Windows 7, Windows 7 Professional, Windows 8 or Windows 8 Professional, you must be logged in as a user in the "Administrators" group.

1. Copy the "KX-NS Unified Web Maintenance Console" setup file to your PC.
2. Double-click the setup file to run the installer.
3. Follow the on-screen instructions provided by the installation wizard.

The Programme Launcher

After Off-line Web Maintenance Console has been installed, you can run the Programme Launcher from the Windows Start menu.

Off-line Web Maintenance Console Programme Launcher

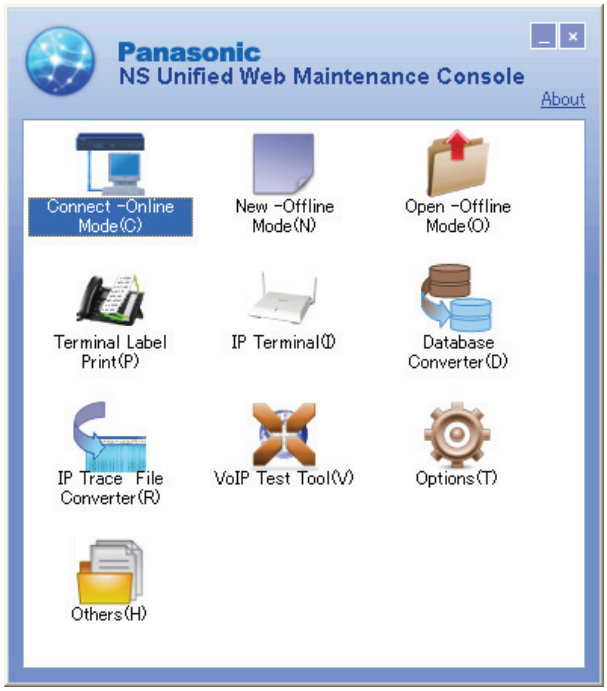

Note

Off-line Web Maintenance Console cannot be used when the PBX Web Manager for Unified PC Maintenance Console (for KX-TDA/KX-TDE/KX-NCP PBXs) is running on the PC.

To disable the PBX Web Manager:

1. In the Unified PC Maintenance Console launcher, click **Option→PBX Web Manager**.
2. Deselect the **Enable Web Server** check box.
3. Click **OK**.

Starting a New System Data File

You can start a new session of PBX programming in Off-line mode. You can then programme PBX settings in Off-line Web Maintenance Console and then save them to a file you can later upload to the PBX.

Note

Since selecting this option creates a blank system data file, uploading this file to the PBX will overwrite all previous settings. Use this function only when necessary.

To create a new system data file

1. In the Programme Launcher, click **New -Offline Mode**. The Off-line Web Maintenance Console login screen will be displayed in your PC's Web browser. For details about the login screen, see **2.1.3 Logging in to Web Maintenance Console**.
2. Log in to Off-line Web Maintenance Console using the Installer level account and password to start the Easy Setup Wizard. For details, see **2.1.4 Easy Setup Wizard**.

To convert a KX-TDA100/KX-TDA200's or KX-TE's system data file to KX-NS300

KX-TDA100/KX-TDA200 or KX-TE system data can be converted for use with the KX-NS300 by using the Database Converter.

1. In the Programme Launcher, click **Database Converter**. The Database Converter screen will be displayed in your PC.
   For details, refer to "Converting KX-TDA100/KX-TDA200 or KX-TE series System Data for Use with the KX-NS300" in "5.3 Starting Web Maintenance Console" in the Installation Manual.

Opening an Existing System Data File

This operation will load a PBX settings system data file from your PC for programming in Off-line mode. The system data file can be a file created earlier using Off-line Web Maintenance Console, or a system data file downloaded from a PBX. You can then programme PBX settings using Off-line Web Maintenance Console and then save the settings to a file you can later upload to the PBX.
When you use the following procedure to open a system file created using a previous version of the KX-NS300 software, a confirmation screen will be displayed asking whether you want to convert the system data to the latest software version. Click **Yes** to convert the data and proceed with Off-line programming.

To open a system data file

1. In the Programme Launcher, click **Open -Offline Mode**.
   The Open dialogue box will be displayed.
2. Navigate to the folder containing the system data file you want to open.
3. Select the file.
4. Click **Open**, and then click **OK**.
   The file will be loaded and the Off-line Web Maintenance Console login screen will be displayed in your PC's Web browser. For details about the login screen, see **2.1.3 Logging in to Web Maintenance Console**.
5. Log in using an account name and password associated with the system data file that was loaded.

Note

User (User) level accounts cannot be used to log in to Off-line Web Maintenance Console. For details about account types, refer to **2.1.1 Web Maintenance Console Accounts**.

Connecting in On-line Mode using the Programme Launcher

You can also use the Programme Launcher to log in to Web Maintenance Console in On-line mode. You can save the IP address and port information for each PBX in a profile. This feature is useful when there are multiple PBXs in your network. For details about connecting to the PBX in On-line mode, see **Connecting to Web Maintenance Console (On-line Mode)** in **1.2.1 Starting Web Maintenance Console**.

To connect in On-line mode using the Programme Launcher

1. In the Programme Launcher, click **Connect -Online Mode**.
   The Connection dialogue box will be displayed.
2. Select a profile from the drop-down list, or enter the IP address and Port manually.
3. Click **Connect**.
   The Web Maintenance Console login screen for connecting directly to the PBX in On-line mode will be displayed in your PC's Web browser. For details about the login screen, see **2.1.3 Logging in to Web Maintenance Console**.

Editing and Printing Terminal Labels

You can create and print key label sheets that match the Flexible Button settings and then use the labels on extensions. In the Programme Launcher, click **Terminal Label Print**. The screen for editing and printing key labels will be displayed. For details, see **1.2.2.1 Editing and Printing Terminal Labels in Off-line Mode**.

Options

You can specify the display language of the Programme Launcher, as well as set the web server port number for Off-line Web Maintenance Console. In the Programme Launcher, click **Options** and change the settings as necessary.

Adding Additional Languages

Additional display language files may be made available. To add a display language not listed in the language selection menu, select **Additional language**, and then click **Browse** to specify the language file. After specifying a language file, click **OK** to change to the selected language.

VoIP Test Tool

Click the **VoIP Test Tool** button to launch the VoIP Test Tool. This tool is identical to the VoIP Test Tool included with the Unified PC Maintenance Console for KX-TDA/KX-TDE/KX-NCP PBXs.

IP Terminal Utility

Click the **IP Terminal** button to launch the IP Terminal setup utility. This utility is identical to the IP Terminal utility included with the Unified PC Maintenance Console for KX-TDA/KX-TDE/KX-NCP PBXs.

IP Trace File Converter

Click the **IP Trace File Converter** button to launch the IP Trace File Converter utility. This utility will convert locally-saved IP trace file data collected by the system utilities listed below into a format that can be analysed by general packet analysis software tools.

– **7.4.2 Utility—Monitor/Trace—V-IPGW Protocol Trace**
– **7.4.3 Utility—Monitor/Trace—V-SIPGW Protocol Trace**

Others

Others is a tool used to edit files saved by using the Export tool. Copy files from the Others folder to edit them. After saving edited files, import them to the PBX.
The following types of data types can be edited.

- Feature – Speed Dial and Caller ID
- Incoming Call – DDI/DID Table
- Wired Extension
- PS Extension

For details, see "6.5 Tool—Import" and "6.6 Tool—Export".

Programming in Off-line Mode

Once you have logged in to Off-line Web Maintenance Console, programming is very similar to On-line mode. The title bar will be coloured differently from when in On-line mode:

When programming in On-line mode:

When programming in Off-line mode:

Some items are not programmable when in Off-line mode, and those items will be greyed out. Some tools and utilities are also not available in Off-line mode. For details, refer to **2.1.2 Access Levels**.

Notice

- In Off-line mode, changes made in **6.7 Tool—Screen Customise** will not be reflected in On-line mode. This is because these settings are not stored in the system data file (DFSYS).
- When you load the system data file to the PBX, you must install any required activation keys in On-line mode. Activation keys are required for mailboxes. Settings such as mailbox passwords will be cleared if the number of activation keys for mailboxes is insufficient.

Uploading Programmed Settings to the PBX

When programming in Off-line mode, clicking the icon will open a save dialogue box. Specify a location and file name for the system data file. This file can then be uploaded to the PBX in On-line mode using the "File Transfer PC to PBX" utility. For details, refer to **7.2.1 Utility—File—File Transfer PC to PBX**.

Notice

- If the PC running the Off-line Web Maintenance Console is shut down, the Web browser is closed, or the user logs out, any changes that have not been saved will be lost. Be sure to regularly save data while programming.
- When you upload a system setting file to the PBX, all existing settings on the PBX will be overwritten with the settings in the file, including settings you may not want to change. To change only specific settings in Off-line mode, follow the procedure below:
  1. Use the "File Transfer PBX to PC" utility in On-line mode to save a file with the PBX's current settings. For details, refer to **7.2.2 Utility—File—File Transfer PBX to PC**.
  2. Use the **Open -Offline Mode** command in the Programme Launcher to load the PBX system file in Off-line mode.
     For details, refer to **Opening an Existing System Data File** above.
  3. Perform the desired programming in Off-line mode, and then click the 💾 icon to save the modified system settings to your PC.
  4. Log in to Web Maintenance Console in On-line mode, and then use the "File Transfer PC to PBX" utility to upload the modified data to the PBX.
- When programming in Off-line mode, be careful when programming the following parameters:
  – **20.1.2 UM Configuration—[1-2] Mailbox Settings—Full Setting—Mailbox Parameters—◆ Mailbox Password (Message Client)**
  – **20.1.2 UM Configuration—[1-2] Mailbox Settings—Full Setting—Notification Parameters—◆ E-mail/Text Message Device—Device No. 1, 2, 3—E-mail Address**

  These parameters require an activation key (KX-NSU2xx) to function. If these items are programmed in Off-line mode, but the PBX does not have the required activation key installed, the values specified for these parameters will be cleared when the data is uploaded to the PBX.

1.2.2.1 Editing and Printing Terminal Labels in Off-line Mode

Follow the procedure below to print key label sheets for use with your system's extensions and DSS consoles.

1. In On-line mode, export PBX system data to your PC, and then open the exported data in Off-line mode.
   a. In On-line mode, use the File Transfer PBX to PC utility to save your system's data and settings to your PC. For details, see **7.2.2 Utility—File—File Transfer PBX to PC**.
   b. Use the Programme Launcher to open the system data in Off-line mode. For details, see **Opening an Existing System Data File** in **1.2.2 PC Programming Using Off-line Mode**.
2. In Off-line mode, export the key settings to a CSV file.
   a. After logging in to Off-line Web Maintenance Console, access the screen from which key settings will be exported:
      – For extensions: **Setup** → **PBX Configuration** → **Extension** → **Wired Extension** → **Flexible Button**
      – For DSS consoles: **Setup** → **PBX Configuration** → **Extension** → **DSS Console**
   b. Click **Export**, specify a location to save the flexible key settings data, and then click **OK**.

   Note

   The **Export** button is available only when in Off-line mode.
3. Open the exported CSV data in the Terminal Label Print utility, and then edit the label settings as necessary.
   a. In the Programme Launcher, click **Terminal Label Print**.
   b. Select **Open**. Specify the exported CSV file in the dialogue that is displayed, and then click **OK**.
   c. Edit the following settings as necessary:

Label	Specifies the label that will be printed next to the corresponding button. (Max. 20 characters)
Colour of Font	Specifies the colour used for the label text for the corresponding button. Click **Choose** to select a colour.
Colour of Background	Specifies the colour used for the label background for the corresponding button. Click **Choose** to select a colour.
Font Size	Specifies the size of the font on the label for the corresponding button. (Size value range: 4–15)
Telephone Type	Specifies the model number of the telephone to determine the size and shape of the label template.

4. Once the settings have been configured, click **Key Label Print** on the settings screen. Follow the Key Label Print Wizard to print the key labels or to output the data as a PDF file.

Section 2

Introduction of Web Maintenance Console

This section serves as reference operating instructions when using Web Maintenance Console to programme the PBX.

2.1 Introduction

2.1.1 Web Maintenance Console Accounts

User account levels

Access to Web Maintenance Console requires a login name and password, which are assigned to accounts in the PBX. Also, access to Web Maintenance Console is controlled by different levels of authorisation. The Installer level is the highest authorisation level. There are also two levels for end users, Administrators and Users. The usage for each level and number of accounts available for each level are as follows:

Level	Description	Number of Accounts
Installer	For dealers and system installers	1
User (Administrator)	For on-site managers	8
User (User)	For end users	492

Differences between user levels

- **Installer**
  The installer level account is the highest authorisation account of the three levels. This account level is to be used by dealers or system installers. All system programming settings are available, and this account is used for overall system installation and maintenance. The installer level can be used to programme which menus in Web Maintenance Console are accessible by Administrator accounts.
- **User (Administrator)**
  Administrator accounts are for general maintenance of users and user settings. This account level is used by on-site managers and network administrators. Administrator level accounts can use Web Maintenance Console to add users or programme user settings.
  User (Administrator) accounts are intended for maintenance functions only. To manage their own PBX user settings, on-site managers and network administrators should create their own User (User) accounts for programming.
- **User (User)**
  User accounts are for individual users of the PBX system. Users can use Web Maintenance Console to change their extension settings, speed dial settings, or other personal settings by accessing a limited number of pre-defined menus.

  Note

  - User (User) accounts cannot be used when programming in Off-line mode. For details, refer to **1.2.2 PC Programming Using Off-line Mode**.

Account Login Names and Passwords

Each account has a login name and password and are specified as follows. All account passwords are set in Web Maintenance Console (see **8.2.1 Users—Add User—Single User**).

Level	Login Name	Password
Installer	INSTALLER	4-16 character password, using a-z, A-Z, and 0-9 (case sensitive). For an initialised PBX that has not yet been set up, the default Installer level password is "1234". You will be prompted to choose a new password for the Installer level account when the Easy Setup Wizard is run (see **2.1.4 Easy Setup Wizard**).
Administrator	1-16 character login name, using a-z, A-Z, and 0-9 (case sensitive). Set during account creation. (see **8.2.1 Users—Add User—Single User**)	4-16 character password, using a-z, A-Z, and 0-9 (case sensitive). Set during account creation. (see **8.2.1 Users—Add User—Single User**)
User		

For more information about creating and managing end user accounts, see **Section 8 Users**.

CAUTION

To the Administrator or Installer regarding account passwords

1. Please provide all system passwords to the customer.
2. To avoid unauthorised access and possible abuse of the PBX, keep the passwords secret, and inform the customer of the importance of the passwords, and the possible dangers if they become known to others.
3. The PBX has no passwords set initially. For security, select an installer password as soon as the PBX system is installed at the site.
4. Change the passwords periodically.
5. It is strongly recommended that passwords of 10 numbers or characters be used for maximum protection against unauthorised access.

2.1.2 Access Levels

Access to menu options within Web Maintenance Console is restricted depending on the level of the account and the current programming mode (see **Programming Modes** in **1.1.2 Introduction**). When a menu option is limited to certain access levels, this is noted in this manual in the initial description of that menu option, for example:
"This option is only available at Installer level."

The options available for each programming mode and access level are shown below.
The access levels are abbreviated as follows:
U: User (User); A: User (Administrator); I: Installer

Note

User (User) accounts cannot be used when programming in Off-line mode.

A check mark indicates that the menu option is available for that access level.

Home Screen

Menu Option	Off-line		On-line		
	A	I	U	A	I
System Information	✓	✓	✓	✓	✓
Logout	✓	✓	✓	✓	✓

Tool

Menu Option	Off-line		On-line		
	A	I	U	A	I
System Data Backup to USB				✓	✓
System Data Backup to NAS				✓	✓
NDSS Link Data Clear					✓
Call Pickup for My Group		✓			✓
Extension List View	✓	✓	✓	✓	✓
Import→Feature - Speed Dial and Caller ID	✓	✓		✓	✓
Import→Incoming Call - DDI/DID Table		✓			✓
Import→ARS - Leading Digit		✓			✓
Import→ARS - Except Code		✓			✓
Import→ARS - Routing Plan		✓			✓
Import→Wired Extension		✓			✓
Import→PS Extension		✓			✓
Import→Quick Dial		✓			✓
Import→SIP Extension		✓			✓
Import→V-IPGW GW Settings		✓			✓

Menu Option	Off-line		On-line		
	A	I	U	A	I
Import→V-IPGW DN2IP		✓			✓
Import→V-SIPGW Settings		✓			✓
Import→V-SIPGW Provider		✓			✓
Export→Feature - Speed Dial and Caller ID	✓	✓		✓	✓
Export→Incoming Call - DDI/DID Table		✓			✓
Export→ARS - Leading Digit		✓			✓
Export→ARS - Except Code		✓			✓
Export→ARS - Routing Plan		✓			✓
Export→Wired Extension		✓			✓
Export→PS Extension		✓			✓
Export→Quick Dial		✓			✓
Export→SIP Extension		✓			✓
Export→V-IPGW GW Settings		✓			✓
Export→V-IPGW DN2IP		✓			✓
Export→V-SIPGW Settings		✓			✓
Export→V-SIPGW Provider		✓			✓
Screen Customise		✓			✓
UM Data Backup					✓
UM Data Restore					✓
UM Backup History					✓
DXDP All OUS					✓
Contact information	✓	✓		✓	✓
UT Option Setting		✓			✓
URL Information		✓			✓

Utility

Menu Option	Off-line		On-line		
	A	I	U	A	I
Diagnosis→Card Diagnosis				✓	✓
Diagnosis→Ping					✓
File Transfer PC to PBX					✓
File Transfer PBX to PC					✓

Menu Option	Off-line		On-line		
	A	I	U	A	I
File View					✓
File Delete					✓
Message File Transfer PC to PBX					✓
Message File Transfer PBX to PC					✓
Error Log				✓	✓
Syslog					✓
Web-MC Event Log				✓	✓
UM System Log					✓
ISDN/QSIG Protocol Trace					✓
V-IPGW Protocol Trace					✓
V-SIPGW Protocol Trace					✓
CS Status Monitor					✓
UM System Trace (Internal)					✓
E1 Signalling Bit Monitor					✓
E1 Line Trace					✓
Digital Trunk Error Report					✓
IP Extension Statistical Information					✓
UM View Reports				✓	✓
E-mail Report				✓	✓
Activation Key Installation					✓
Email Notification—Alert		✓			✓
Email Notification—System Analysis					✓
Email Notification—Test Email					✓
UM Command					✓
UM – System Prompts Customisation				✓	✓
Automatic Two-way Recording	✓	✓		✓	✓
UM - System Maintenance		✓			✓

2.1.3 Logging in to Web Maintenance Console

After establishing a connection to Web Maintenance Console (see **1.2.1 Starting Web Maintenance Console**), the login window is displayed, and a login name and password must be entered. If this is the first time to log in to Web Maintenance Console, and the PBX is in its initialised, factory default state, you must log in using the Installer level account to begin the Easy Setup Wizard (see **2.1.4 Easy Setup Wizard**).
For information about account names and passwords, see **2.1.1 Web Maintenance Console Accounts**.

Login Screen

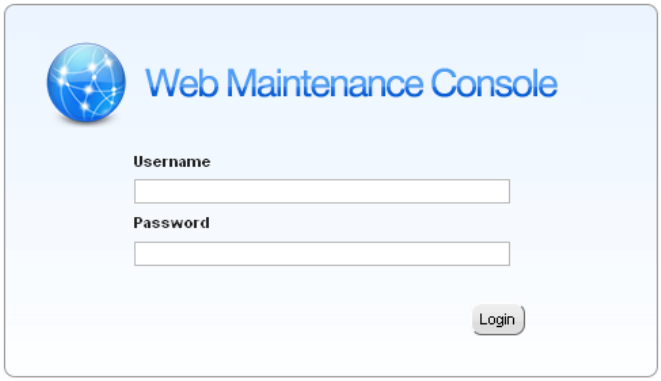

Login Restrictions

- Up to 32 User (User) and User (Administrator) level accounts may log in at one time to Web Maintenance Console in On-line mode.
- Only 1 user may log in using the Installer level account at a time. If someone using the Installer level account is logged in to Web Maintenance Console and is making changes, and another user logs in using the Installer level account, the user logging in may override the other logged-in user so that programming can be performed (a warning screen will be displayed for the user that is about to override the currently logged-in user).
- Users can view only menus and setting items they may access according to their account level. For User (Administrator) level accounts, the items that can be viewed can be set by the Installer level account. For details, see **6.7 Tool—Screen Customise**.
- If two logged-in users change the same setting, the change made last will be the effective setting.
- If a user attempts to log in, but enters an incorrect password three times, the failure is recorded in the error log of the PBX and the user may not attempt to log in again for a 5-minute period.

2.1.4 Easy Setup Wizard

In the Easy Setup Wizard, you will configure the mandatory settings required for the PBX. When you log in to Web Maintenance Console for a PBX that is in its initialised, factory default state, the Easy Setup Wizard for that PBX will launch automatically.
You must log in using the Installer level account name and password.

– The Installer level account name is "INSTALLER".
– The default Installer level account password is "1234".

After logging in, the Easy Setup Wizard welcome screen is displayed. Select a language, and then click **Install**. Refer to **5.4.1 Easy Setup Wizard** in the Installation Manual for detailed and important information about configuring the PBX using the Easy Setup Wizard.

2.1.5 Card Status

Certain tools, utilities and settings require that the target card be set to out-of-service (OUS) or in-service (INS) status before the operation is carried out. Where required, this is noted in the description of each item. Card status changes can be performed only in On-line mode (see **Programming Modes** in **1.1.2 Introduction**).

- "In service" means that the card is installed correctly in the PBX, and is capable of being used normally.
- "Out of service" means that the card is installed correctly in the PBX, but has been temporarily removed from use. This allows settings to be modified or software to be upgraded.
- "Fault" means that the card is not installed in the PBX correctly, or is not functioning correctly. For more information, see the Installation Manual.

For details about how to change the status of a card, see **To change the status (INS/OUS) of a card (On-line mode only)** in **9.1 PBX Configuration—[1-1] Configuration—Slot**.

2.1.6 Extension Number Setting

Many screens within the Maintenance Console software allow you to select extensions as part of programming various features (for example, as members of a group). These screens use a standard window to make selecting multiple extensions easy, accessed by clicking a button. This section explains how to use this Extension Number Setting window.

To select multiple extension numbers, select the type of extension to display, highlight the extensions you wish to add, then click the **Add** button. When finished, click **OK**. Data for the selected extensions will be added to the first free spaces on the original screen.

◆ Extension Type

Selects the types of extension numbers to display in ◆ **Extension Numbers & Names List**. Multiple items can be selected. Items that are not available are shown with a grey checkbox.

Value Range

Wired Extension, Portable Station, ICD Group, PS Ring Group, OGM (DISA), External Pager, UM / VM Extension, UM Group, VM(DPT) Group, VM(DTMF) Group

◆ Extension Numbers & Names List

Displays all available extensions of the types selected in ◆ **Extension Type**, and names. Click entries to select them, and click the **Add** button when finished, to add the selected extensions. To deselect an entry, click it again.

Value Range

Matching extensions

◆ Available Column

Specifies which fields in the original form to add extension data to. For example, if both extension numbers and names can be entered in the original form, it is possible to specify that extension name data not be transferred, by deselecting that field here.
To select or deselect a field, click its name.

Value Range

Available fields

◆ Selected Extension List

Displays the extensions that have been selected to be added to member data. To remove an extension from this list, click it to select it and click **Delete**.

Value Range

Selected extensions

2.2 Logout

To logout of Web Maintenance Console, click the button to end the programming session and return to the Login screen. When this option is chosen, system data is automatically saved from the temporary memory (DRAM) of the PBX to the System Memory.

To logout

1. Click the button.
   A confirmation message will be displayed.
2. Click **Yes**.

Note

- If the PC running the Web browser that is connected to Web Maintenance Console is shut down, or the Web browser is closed, any changes that have not been saved to the System Memory will be lost. To save settings while programming, click the button on the Home screen. Always end your programming session by clicking the button.
- If you are logged in but do not perform any operations in Web Maintenance Console for 60 minutes (default value), you will be automatically logged out.

2.3 Frequently Asked Questions (FAQ)

This section provides answers to some common questions about using the Maintenance Console software to programme the PBX. The information is divided into the following topics:

Title	Description
Connection	Connecting to the PBX using Maintenance Console.
Maintenance Console Software	Using the Maintenance Console software.
Card Status	Changing the status (INS/OUS) of cards.
Portable Stations	Setting up portable stations, including registration and deregistration.
Numbering	Changing the numbering plan for the PBX, or numbers of individual extensions or features.
Saving Modified Data	Safely saving PBX data edited with Maintenance Console.
Setting Features	Setting up individual features.

Connection

Q The Maintenance Console cannot connect to the PBX via a LAN connection.

A
- Is the PC connected to the LAN?
- Have the IP address and port number of the PBX been set correctly? For more details, see **27.1 Network Service—[1] IP Address/Ports**.
- Is the login name and password correct?

Q Can I perform initial setup of the PBX without being connected to the PBX?

A
- Yes. This is possible in Off-line mode.
  Create a new system data file in Off-line mode (see **1.2.2 PC Programming Using Off-line Mode**), modify settings as necessary, and then upload this file to the PBX later (see **7.2.1 Utility—File—File Transfer PC to PBX**).

Maintenance Console Software

Q How do I confirm the software version of the PBX or installed cards?

A
- From **9.1 PBX Configuration—[1-1] Configuration—Slot**, place the mouse cursor over the **System Property** button and click **Site**. The software version of the PBX is displayed on this screen.
- From **9.1 PBX Configuration—[1-1] Configuration—Slot**, place the mouse cursor over the **System Property** button and click **Slot Summary**. Summary information is displayed for all cards installed in the PBX.

Q Not all of the characters of a setting can be displayed because the column is too narrow.

A
- Move the mouse to the line between the names of 2 setting items, at the top of the table.
  The pointer will change to a double arrow. Click and drag the line to the right until all characters are displayed.

Card Status

Q The status of a new card will not change to "INS".

A
- With the new card installed, does the total number of extensions or trunks exceed the maximum supported by the PBX?
- Is the type of card installed in the slot different from the card type set as "Pre-Install" for that slot? Confirm that the correct card is installed in the slot.
- Is the card firmly and fully installed in the slot? Confirm that the card is installed correctly in the slot.
- Confirm that the card is not damaged.

Q I cannot change an LCO port to INS status.

A
- Is the card installed in the appropriate slot?
- Is the card installed in the correct slot, but not functioning correctly?
  Check the condition of the card.
- Is the card itself in INS status?
  Set it to INS status.
- Is a trunk line connected to the appropriate port?
- Is the port in FAULT status, even though a trunk is connected?
  Run diagnosis on the relevant slot.

Q How do I prevent newly installed cards automatically being changed to "INS"?

A
- Change ◆ **New Card Installation—Card Status for any Card** in **9.35 PBX Configuration—[1-3] Configuration—Option** from "In Service (INS)" to "Out of Service (OUS)".

Portable Stations

Q I cannot register Portable Stations using the method described in 9.34 PBX Configuration—[1-2] Configuration—Portable Station.

A
- Do the PINs (Personal Identification Numbers) of the PBX and the Portable Station match? Confirm that they are the same.
- Is the Portable Station within transmission range of the CS?
- Has the Portable Station previously been registered at another location?
  It is not possible to register a Portable Station at 2 locations, so use the ◆ **Forced De-registration** option to delete the previous registration.

Q I cannot delete the extension number of a Portable Station.

A
- First, de-register the Portable Station itself, and then delete the extension number.

Q I cannot de-register a Portable Station.

A
- Is the Portable Station turned on? If not, turn it on.
- Is the Portable Station within transmission range of the CS? If not, move it closer to the CS and try the de-registration operation again.

Q The Portable Station I want to de-register is broken, and will not turn on, or is not available, or the registration information was deleted first from the Portable Station, so it cannot be de-registered.

A • The Portable Station can be forcibly de-registered by following the procedure shown in ◆ **Forced De-registration** of **9.34 PBX Configuration—[1-2] Configuration—Portable Station**.

Q **I changed the extension number of a Portable Station, but the display of the Portable Station still shows the old extension number.**

A • Turn the Portable Station off and back on again, to force it to re-register its location.

Q **I changed the FCO of a Portable Station, but the display of the Portable Station still shows the old FCO.**

A • Turn the Portable Station off and back on again, to force it to re-register its location.

Q **If I delete the extension number of a Portable Station, and then turn the Portable Station off and back on again, it does not function correctly.**

A • Do not delete the extension number of the Portable Station, as this information is necessary for it to operate.

Numbering

Q **How do I change the extension number of a wired extension?**

A • Change the extension number of the target port to the new number, and click **Apply**. Next, set the port to OUS status, and then back to INS status.

Q **I changed the extension number of a wired extension while the extension was engaged in a call, but the display still shows the previous extension number.**

A • The extension number will not change while the extension is in use. When the conversation is finished, set the port to OUS status, and then back to INS status.

Q **How do I change the extension numbering plan from 3-digit numbers to 4-digit numbers?**

A • Perform the following steps:

1. Open the **10.6.1 PBX Configuration—[2-6-1] System—Numbering Plan—Main** screen.
2. Enter a 2-digit number in ◆ **Leading Number**, or change ◆ **No. of Additional Digits** from "x" to "xx".
   For more details, see **What is the procedure to modify the Numbering Plan?** in **Numbering**.

Q **How do I set a 3-digit numbering plan?**

A

- Select 3-digits for **default value of Numbering Plan** in the Easy Setup Wizard. If you want to change to a 3-digit extension numbering plan after the PBX system is already running using a 4-digit extension numbering plan, follow the procedure below. There are 2 methods of creating a 3-digit numbering plan, using **10.6.1 PBX Configuration—[2-6-1] System—Numbering Plan—Main**:
  1. Set the leading number to be 2 digits, with one additional digit. This method allows a maximum of 10 extensions.
     Example: ◆ Leading Number = 10; ◆ **No. of Additional Digits** = x
     In this example, extension numbers 100 to 109 can be used.
  2. Set the leading number to be one digit, with 2 additional digits. This method allows a maximum of 100 extensions.
     Example: ◆ **Leading Number** = 1; ◆ **No. of Additional Digits** = xx
     In this example, extension numbers 100 to 199 can be used.

  For more details, see **What is the procedure to modify the Numbering Plan?** in **Numbering**.

Q What is the procedure to modify the Numbering Plan?

A

- Perform the following steps:
  1. Confirm that the Numbering Plan you will change is not currently being used by any extensions (see **6.4 Tool—Extension List View**).
     If it is being used by extensions, temporarily change the extension numbers of those extensions to that of another numbering plan, or delete the extension number (see **12.1.1 PBX Configuration—[4-1-1] Extension—Wired Extension—Extension Settings** and **12.2.1 PBX Configuration—[4-2-1] Extension—Portable Station—Extension Settings**).
  2. Clear the ◆ **Leading Number** cell.
  3. Click **Apply**.
  4. Modify the ◆ **No. of Additional Digits** cell as required.
  5. Click **Apply**.
  6. Enter the desired value in the ◆ Leading Number cell.
  7. Click **Apply**.
  8. Set all extension ports to OUS status.
  9. On the relevant screens, set the extension numbers of extensions to the desired values.
  10. Set all extension ports back to INS status.

Q When modifying the Numbering Plan, I cannot change the Leading Number.

A

- It is not possible to use the same Leading Number for 2 extension blocks, or to use a number that could possibly overlap with another Leading Number.
  So, for example, if "2" is already set as a Leading Number it is not possible to set "21" as another Leading Number because of the possible overlap of extension numbers.
  The number you are trying to store cannot be used if it is already being used by:
  - A feature number
  - Another extension block
  - A ◆ Dial setting (see **17.1 PBX Configuration—[9-1] Private Network—TIE Table**)
  - Quick Dialling (see **10.6.2 PBX Configuration—[2-6-2] System—Numbering Plan—Quick Dial**)

  In any of these cases, choose another number.

Q When modifying the Numbering Plan, how do I set a 1-digit extension number?

A
- Perform the following steps:
  1. Clear the ◆ **Leading Number** cell.
  2. Click **Apply**.
  3. Set ◆ **No. of Additional Digits** to "None".
  4. Click **Apply**.
  5. Enter the desired value in the ◆ **Leading Number** cell.
  6. Click **Apply**.
  7. Set all extension ports to OUS status.
  8. On the relevant screens, set the extension numbers of extensions to the desired values.
  9. Set all extension ports back to INS status.

Q How do I change a feature number?

A
- Perform the following steps:
  1. Open the **10.6.1 PBX Configuration—[2-6-1] System—Numbering Plan—Main** screen and navigate to the **Features** tab.
  2. Change the value in the **Dial** cell of the desired feature.
  3. Click **Apply**.

Q I cannot change a feature number.

A
- It is not possible to use the same number for 2 items.
  The number you are trying to store cannot be used if it is already being used by:
  - A feature number
  - An extension
  - A ◆ Dial setting (see **17.1 PBX Configuration—[9-1] Private Network—TIE Table**)
  - Quick Dialling (see **10.6.2 PBX Configuration—[2-6-2] System—Numbering Plan—Quick Dial**)

  In any of these cases, choose another number.

Q How do I change the code used to access another PBX?

A
- Perform the following steps:
  1. Open the **10.6.1 PBX Configuration—[2-6-1] System—Numbering Plan—Main** screen.
  2. Select the **Other PBX Extension** tab.
  3. Change the value in the ◆ **Dial** cell of the desired feature.
  4. Click **Apply**.

Q I cannot change an Other PBX Extension code.

A
- It is not possible to use the same number for 2 items.
  The number you are trying to store cannot be used if it is already being used by:
  - A feature number
  - An extension
  - A ◆ Dial setting (see **17.1 PBX Configuration—[9-1] Private Network—TIE Table**)
  - Quick Dialling (see **10.6.2 PBX Configuration—[2-6-2] System—Numbering Plan—Quick Dial**)

  In any of these cases, choose another number.

Q **I cannot change a feature number on the B/NA DND Call Feature screen.**

A
- The number you are trying to store is already being used by another call feature. Please choose a different number.

Q **How do I prevent extension numbers being automatically assigned to a newly installed card?**

A
- Change ◆ **New Card Installation—Automatic Extension Number Set for Extension Card** in the **9.35 PBX Configuration—[1-3] Configuration—Option** screen from "Enable" to "Disable".

Saving Modified Data

Q **Modified settings have not been updated in the PBX.**

A
- Click **Apply** or **OK** in the main screen.

Q **If I reset the PBX directly after modifying settings, the modified settings are not updated in the PBX.**

A
- When you click **Apply**, the settings are updated in the PBX, but are not yet saved to the System Memory. If system data is not saved to the System Memory, the PBX will restore the data that was last saved to the card in the event that the PBX is reset, or power is turned off and back on again.
  Therefore, before resetting the PBX, click the 💾 button on the Home screen to save the system data to the System Memory. Also, when you finish a programming session, be sure to click the button to logout and save the system data to the System Memory.

Q **After reinitialising the PBX, I restored system data from a previous backup. However, some of the settings have not been restored to their previous values.**

A
- The following setting data is not saved to the System Memory, so will be deleted when the PBX is initialised. This data is stored in the PBX's battery backup memory.
  - Advice of Charge (AOC)
  - Hospitality guest billing data
  - Timed Reminder
  - ICD Group login status
    (All extensions are set to Login by default.)
  - Remote Extension Dial Lock

Setting Features

Q How do I change the dialling mode of an analogue trunk?

A
- From the **9.24 PBX Configuration—[1-1] Configuration—Slot—Port Property - LCO Port** screen, change the ◆ **Dialling Mode** setting of the target port to "DTMF" or "Pulse", as required.

Q How do I set disconnect detection (CPC Detection) for an analogue trunk?

A
- From the **9.24 PBX Configuration—[1-1] Configuration—Slot—Port Property - LCO Port** screen, modify the ◆ **CPC Signal Detection Time—Outgoing, Incoming** setting of the target port.
  The required value varies by carrier. Transmission and reception can be set separately.

Q How do I connect to another PBX using QSIG?

A
- From the **9.26 PBX Configuration—[1-1] Configuration—Slot—Port Property - PRI Port** screen, set the Port Type of the port you want to use to either "QSIG-Slave" or "QSIG-Master".

Q How do I edit a Class of Service, or create a new Class of Service?

A
- Class of Service feature restrictions can be set from the **10.7.1 PBX Configuration—[2-7-1] System—Class of Service—COS Settings** screen.

Q How do I restrict calls between 2 extensions?

A
- Calls between extensions can be restricted from the **10.7.3 PBX Configuration—[2-7-3] System—Class of Service—Internal Call Block** screen.
  Click in the relevant cells to select the COS levels whose extensions are blocked from calling each other.

Q How do I restrict trunk calls made by extensions?

A
- Trunk calls made by extensions can be restricted from the **10.7.2 PBX Configuration—[2-7-2] System—Class of Service—External Call Block** screen.
  Click in the relevant cells to select the trunk groups that cannot be used by extensions associated with a particular COS in each time mode.
  To prevent extensions associated with a COS from making trunk calls, set all trunk groups for that COS to "Block" (blue).

Q How do I modify the hold operation for SLTs?

A
- It is possible to choose how to hold a line and transfer a call with an SLT using the ◆ **SLT—SLT Hold Mode** option on the **10.9 PBX Configuration—[2-9] System—System Options** screen.
  For more details, see "2.13.1 Call Hold" of the Feature Guide.

Q How do I set up an Incoming Call Distribution (ICD) group to receive trunk calls directly?

A

- Perform the following steps:
  1. On the **11.5.1 PBX Configuration—[3-5-1] Group—Incoming Call Distribution Group—Group Settings** screen, enter the floating extension number you chose for the ICD group in the ◆ **Floating Extension Number** cell.
  2. Click **Apply**.
  3. On the **11.5.1.1 PBX Configuration—[3-5-1] Group—Incoming Call Distribution Group—Group Settings—Member List** screen, select the ICD group you created from the **ICD Group No.** drop-down list.
  4. Enter the extension numbers of member extensions in the ◆ **Extension Number** column.
  5. Click **Apply**.
  6. On the **DIL** tab of the **18.2 PBX Configuration—[10-2] CO & Incoming Call—DIL Table & Port Settings** screen, enter the floating extension number of the ICD group as the ◆ **DIL Destination—Day, Lunch, Break, Night** of each time mode.
  7. Modify other settings as required from the **Group—Incoming Call Distribution Group** submenu.

Q How do I set the queuing operation for an Incoming Call Distribution group?

A

- Perform the following steps:
  1. On the **11.5.2 PBX Configuration—[3-5-2] Group—Incoming Call Distribution Group—Queuing Time Table** screen, set the actions as required for each queuing table.
  2. On the **11.5.1 PBX Configuration—[3-5-1] Group—Incoming Call Distribution Group—Group Settings** screen, from the **Queuing Time Table** tab, select the number of the Queuing Time Table to use in each time mode.

Q How do I add an extension as a member of an Incoming Call Distribution (ICD) group?

A

- Perform the following steps:
  1. On the **11.5.1.1 PBX Configuration—[3-5-1] Group—Incoming Call Distribution Group—Group Settings—Member List** screen, from the **ICD Group No.** drop-down list, select the group you want to modify.
     The ICD group must have an extension number set.
  2. Enter the extension number of the extension you want to add in a blank cell of the ◆ **Extension Number** column.
  3. Set ◆ **Delayed Ring** as necessary.
  4. Click **Apply**.

Note that it is necessary to set the extension number of the ICD group in advance.

Q I have set FWD through system programming, but calls are still not being forwarded.

A

- Perform the following steps:
  1. Check that the **Forward / DND** settings of the target extension on the **12.1.2 PBX Configuration—[4-1-2] Extension—Wired Extension—FWD/DND** or **12.2.2 PBX Configuration—[4-2-2] Extension—Portable Station—FWD/DND** screen are set to one of the forwarding settings.
  2. Create a FWD button on the target extension if one does not already exist.
  3. Press the FWD button so that it changes to FWD status.

Section 3

Web Maintenance Console Home Screen

This section explains how to setup the main PBX and other connected PBXs from the Home Screen of Web Maintenance Console.

3.1 Home Screen

When you log in to Web Maintenance Console, the home screen is displayed. For information about connecting to Web Maintenance Console and logging in, see **1.2.1 Starting Web Maintenance Console**.
The home screen of Web Maintenance Console is divided into several areas, as shown below:

1. **Logged in Account Level**
   The logged in account level is displayed.
2. **Menu Buttons**
   Provides access to the three main components of Web Maintenance Console:

Button	Description
Home Screen	Clicking this button will load the Home Screen. From the Home Screen, you can: • View the Main unit configuration and the status of cards. For more information, see **9.1 PBX Configuration—[1-1] Configuration—Slot**.
Maintenance Screen	Clicking this button will display the Maintenance Screen tree view items. From the Maintenance Screen, you can: • Check the status and equipment of the PBX • Backup or update PBX system files • Use tools and reports to monitor and analyse system usage For more information, see **Maintenance Screen Tree View Items** below.
Setup Screen	Clicking this button will display the Setup Screen tree view items. From the Setup Screen, you can: • Configure PBX hardware and virtual cards • Programme settings for extensions and call handling • Configure network settings and auxiliary PBX functions • Configure the Unified Messaging (UM) system For more information, see **Setup Screen Tree View Items** below.

3. Web Maintenance Console Features

Clicking these buttons provides features for Web Maintenance Console, as follows:

Button	Description
Save Data	Clicking this button will save any changes made to settings to the System Memory. Programming changes that are not saved will be lost if the PBX is reset or is turned off. Changes may also be lost if Web Maintenance Console is suddenly terminated or the PC running Web Maintenance Console loses power unexpectedly. Be sure to save the data periodically while programming, especially during long programming sessions.
System Information	Clicking this button displays the Web Maintenance Console software version, copyright notices, and licences. **Note** Licence information is not displayed when programming in Off-line mode.
Logout	Clicking this button will save any programming changes to the PBX's System Memory and log you out of Web Maintenance Console. For more information, see **2.2 Logout**.
Extension List View	Clicking this button will display the Extension List View in a separate window. For details, see 6.4 Tool—Extension List View.
Tab Selection	Clicking this button will switch the tab display. There are two types of tab display, Tab Mode and Single Mode. When Tab Mode is used, items clicked in the tree are displayed in new tabs. When Single Mode is used, the current tab displays the clicked item. **Note** • When the Menu button is clicked or when you log out in Tab Mode, all child tabs are closed. • When a parent tab is closed, all of its child tabs are closed. • When Tab Mode is used: – Up to 10 tabs can be opened including the parent tab. – Tabs are displayed according to the tab settings of the browser*1 used. *1 To enable Tab Mode for Internet Explorer, select **Tools** → **Internet Options** from the menu bar, open the **General** tab and under **Tabs**, and then click **Settings**. In the displayed window, check "Always switch to new tabs when they are created", and then select "Always open pop-ups in a new tab". **Notice** Do not reload the web page during in Tab Mode. Doing so will close all child tabs.

4. Tree View

When the Maintenance Screen or Setup Screen is selected, the tree view is displayed. The tree view is used to display PBX setting items. Setting items are listed in categories, and by clicking items in the tree, setting items are displayed to the right in the settings programming area. Some tree items have sub-categories with additional options and settings. Clicking a sub-category will open an additional layer of settings. Below is a summary of the tree view menu items for the Setup Screen and the Maintenance Screen.

Maintenance Screen Tree View Items

Item	Primary Functions
Status	• Check the status of the PBX's system hardware • Check the status of PBX equipment (PSs, CSs, etc.) • Check the status of extensions used by the Unified Messaging system For details, see **Section 4 Status**.
System Control	• Download and update PBX software files • Manage music on hold (MOH) data • Reset or shutdown the system For details, see **Section 5 System Control**.
Tool	• Backup system data to a USB memory device • View a list of PBX extensions • Import and export PBX settings and user information • Backup or restore Unified Messaging data For details, see **Section 6 Tool**.
Utility	• Perform tests for PBX cards and network connections • Transfer files between the PBX and a connected PC • View reports, error logs, event logs, and programme update logs • Monitor and trace PBX communications and protocols • Manage activation keys For details, see **Section 7 Utility**.

Setup Screen Tree View Items

Item	Primary Functions
Users	• Manage, view, and add PBX user profiles and account information For details, see **Section 8 Users**.
PBX Configuration	• Configure PBX hardware settings for cards, equipment, and networking • Configure network-wide programming such as BGM and Class of Service • Configure dialling features, call routing, and incoming call settings • Configure call logging (SMDR) and other PBX maintenance items For details, see **Section 9 PBX Configuration—[1] Configuration** to **Section 19 PBX Configuration—[11] Maintenance**.
UM Configuration	• Configure Unified Messaging mailboxes and voice mail subscriber settings • Configure service settings and system parameters • Configure hardware options For details, see **Section 20 UM Configuration—[1] Mailbox Settings** to **Section 26 UM Configuration—[7] System Security**.
Network Service	• Configure server and client features for the PBX • Configure connections settings and network security For details, see **Section 27 Network Service**.

Standard Buttons

There are standard buttons that are displayed on many screens within the Maintenance Console.

The standard buttons are as follows:

Button	Function
OK	Temporarily implements changes to the system's memory (DRAM) and closes the current screen.
Cancel	Abandons changes and closes the current screen.
Apply	Temporarily implements changes to the system's memory (DRAM) and remains on the same screen.

Copying and Pasting Data

Many setting items in Web Maintenance Console can be copied and pasted to other items on the same screen. When the icon is displayed, clicking it will open a menu where you can specify the copy source and the paste destinations.

1. On a programming screen, click . The copy window will be displayed.

   Note

   The icon may not be displayed for some programming screens.

2. Select the copy source from the **Copy From** drop-down menu.
3. In **Copy To**, select one or more paste destinations. Hold down the "Ctrl" key and click to select destinations one at a time, or hold down the "Shift" key and click to select a range of destinations.
4. In **Items**, select one or more items to copy from the source selected in **Copy From**. Hold down the "Ctrl" key and click to select items one at a time, or hold down the "Shift" key and click to select a range of items.
5. Click **Copy**. The programming item(s) selected in **Items** for the copy source specified in **Copy From** will be copied to the destination(s) specified in **Copy To**.

Individual items can also be copied and pasted in a manner similar to other software programmes. Press "Ctrl"+"c" to copy a highlighted (orange-coloured) programming item entry, select a target cell by pressing the keyboard arrow keys, and then press "Ctrl"+"v" to paste the copied information to the selected cell.

Section 4

Status

This section serves as reference operating instructions for the Status menu of the Maintenance screen of Web Maintenance Console.

4.1 Status—Equipment Status

4.1.1 Status—Equipment Status—UPS

Information is provided about the status of the UPS device and the connection to the PBX

- **UPS Connection Status**
  Displays if the UPS system is connected or not connected. If a UPS system is connected, the information below will be displayed for the UPS system.
- **Battery Voltage (V)**
  The voltage of the UPS battery is displayed (0-240 V).
- **Battery Charge Percentage (%)**
  The remaining charge of the UPS battery is displayed (percentage value).
- **Power Supply**
  Displays the usage status of the UPS (if the UPS is engaged in supplying power to the PBX).
- **UPS Shutdown Conditions - Battery level**
  From the drop-down list, select the amount of remaining battery level for when to initiate PBX shutdown procedures.

4.1.2 Status—Equipment Status—CS Information

Displays information stored by the PBX regarding each Cell Station (CS).
This option is only available for the Installer level account in On-line mode and requires that the target V-IPCS4 card be set to INS status.

The displayed items are as follows:

Item	Description
Shelf	Number of the shelf
Slot	Number of the slot
Port	Number of the port
CS Name	Name of the attached CS
Status	Service status of the attached CS: INS, OUS, or FAULT. If the status is FAULT, subsequent data items for that port will be left blank.
Version	Version number of the programme file stored in the CS
Revision	Revision number of the programme file stored in the CS
CSID	12-digit ID number of the CS
Path	Number of the wireless extension currently using each path. In the case of a group, several extensions may be using the same floating extension number. When an extension number is not registered, the display shows "OFF". The number of paths that can be used varies for each CS model. For more details, see the documentation for your CS.
Group Call	Number of PSs registered to the attached CS that are members of a PS Ring Group.

To view CS information

1. From the **Target CS I/F Shelf-Slot No.** drop-down list, select the target shelf and slot.
   - To display information on a single card, select the shelf number, slot number and name of that card.
   - To display information on all matching cards, select "All".
2. From the **Interval Timer** drop-down list, select the number of seconds between each automatic screen refresh.
3. If you want to save the CS information, click **Capture**.
   a. Create a file for saving the data.
   b. Click **Start**.
   c. Click **Close**.
4. Click **Start** to begin monitoring.
   Monitoring will be performed and the screen will refresh according to the interval specified.
5. Click **Stop** to end monitoring.
6. If you started to save the CS information in step **3**, click **Capture**, then click **Stop** to record the information to the specified file.
7. Click **Close** to return to the main screen.

4.1.3 Status—Equipment Status—PS Information

Displays Portable Station (PS) registration information, including the associated Cell Station (CS).
This option is only available for the Installer level account in On-line mode.

The displayed items are as follows:

Item	Description
PS No.	PS location number. Only registered PSs will be displayed.
Extension Number	Extension number of the PS.
Location Slot	Slot number of the CS that the PS is registered with.
Location Port	Port number of the CS that the PS is registered with.

4.1.4 Status—Equipment Status—UM Port status

The UM Port status screen displays each port's status and number for the Unified Messaging system. The screen will be updated every 30 seconds. Each port's status will be displayed in one of the following ways:

- **Online (Ready)**: The port is ready to be used.
- **Incoming Call**: The port is handling an incoming call.
- **Outgoing Call**: An outgoing service is being processed.
- **Error Occurred**: An error has been detected.
- **Off Line**: The port is offline.

This screen can be accessed only in On-line mode.

4.1.5 Status—Equipment Status—USB

USB Mount Status indicates if a USB memory device is connected to the PBX. There is also an **Unmount** button.

- **Mounted**: A USB memory device is connected to the PBX. Before removing the USB memory device from the PBX, click **Unmount**.

  Note

  If a mounted memory device is removed from the PBX without first clicking **Unmount**, the data on the USB memory device may be damaged.

- **None**: No USB memory device is detected by the PBX.

This screen can be accessed only in On-line mode.

Section 5

System Control

This section serves as reference operating instructions for the System Control menu of the Maintenance screen when programming using Web Maintenance Console.

5.1 System Control—Program Update

The programme files for the following hardware components can be updated with the Program Update feature. Each file must be named as indicated in the table to be recognised by the KX-NS300.

Hardware that can be updated using Program Update

Programme Type	Target of Update	File Name
MPR Programme	KX-NS300 Mother Board	PFMPR
Expansion Unit Programme	KX-NS320 Mother Board	PEXPS
LPR Programmes	DHLC/DLC	PDHLC2
PT Programmes	KX-NT265	PNT265A
	KX-NT343, KX-NT346, KX-NT343	PNT300
	KX-NT321	PNT321
	KX-NT511	PNT511
	KX-NT551	PNT550
Firmware for KX-NS300	PFPGA	PFPGA
	PARMIRNR	PARMIRNR
	PARMVDNR	PARMVDNR
	PARMIREP	PARMIREP
	PARMVDEP	PARMVDEP
	PC300NR	PC300NR
	PC300EP	PC300EP
	PC300DAG	PC300DAG

5.1.1 System Control—Program Update—Download Program File

Software updates for PBX hardware components can be downloaded to the PBX. Manual and automatic methods are available.
Programme downloading can be performed only in On-line mode.

Note

- When using an FTP server with this feature, the programme files to be downloaded to the KX-NS300 PBX must be named on the FTP server in a specific way that includes the version number.
  Example: "PNT300_xxx_xxx_xxx"
  ("xxx_xxx_xxx" is the version number.)

Manual

Using manual operations, the location of updated PBX software is specified and downloaded to the Main unit.

To download programme files manually

1. In **Location of program files**, specify the location of the updated files from the **Look in** drop-down list. The choices are as follows:
   - **Local PC**
     Click **Browse** and specify the location of the updated programme files stored on the PC logged in to Web Maintenance Console.
   - **USB Memory**
     If a USB memory device is inserted into the PBX, the contents of the following directory on the device will be checked for updated files:
     /private/meigroup/psn/ippbx/update
   - **FTP Server**
     The PBX connects to the specified FTP server and checks for updated files. Specify an FTP server from the **FTP connection name** drop-down list, and specify the number of attempts to connect to the FTP server in **No. of retries**.
     To specify a new FTP site, see **27.3.1 Network Service—[3-1] Client Feature—FTP**.
   - **NAS**
     Specify the location of the updated programme files stored on a directory of the NAS to Web Maintenance Console.
2. Specify which PBX programme files will be automatically downloaded by checking the boxes next to each hardware item.
3. **For FTP Server only**
   Click **Check** to confirm the connection to the FTP server. If a connection is established, the **Execute** button will become active.
4. Click **Execute**, and then click **OK** on the confirmation message that appears. When the transfer is complete, click **OK**.

Note

- If downloading cannot be completed within 10 minutes (due to slow network speeds or other connection problems), the download operation will be cancelled.

Automatic

The Main unit is set to automatically check an FTP server for updated programme files. If an update is available, the Main unit will download the data.

To download programme files automatically

1. For **Download Server**, select an FTP site.
   To specify a new FTP site, see **27.3.1 Network Service—[3-1] Client Feature—FTP**.
2. For **Download mode**, select one of the following:
   - **None**: No actions are taken (automatic downloading is disabled).

- **Check only**: The specified download server is checked at the specified times. If an e-mail is entered in **Email notification**, an e-mail notification is sent when updated files have been discovered.

  Note

  If **Check only** is selected, updated files will have to be downloaded manually (see the manual procedure above).

- **Download automatically**: The specified download server is checked at the specified times. If updated files are discovered, they will be downloaded automatically to the PBX. If an e-mail is entered in **Email notification**, an e-mail notification is sent when updated files have been downloaded.

3. In **Check time and date**, specify when the PBX will contact the server to check for updates. The check can be performed on a daily or weekly basis.
4. In **Email notification** specify up to 2 e-mail addresses that will receive an e-mail notification when updated files have been discovered or when updated files have been downloaded.

   Note

   If **Download automatically** is not selected in step **2**, specify at least one e-mail address so that an administrator will be notified when updated files have been discovered.

5. To begin automatic checking for updates according to **Check time and date**, click **Execute**.
6. The PBX will now periodically perform checks and downloads as specified in the settings. Click **Download Cancel** on this screen to stop automatic programme updates.

Note

When the system is downloading data from an FTP server, if downloading cannot be completed within 10 minutes (due to slow network speeds or other connection problems), the download operation will be cancelled.

5.1.2 System Control—Program Update—Update Program File

Once updated programme files have been downloaded and are stored on a PBX, they can be used to update the system files of the PBX. The update process can be set to be automatically performed at a specified time, or the update process can be carried out manually.
You must be connected to the PBX in On-line mode to update programme files.

Note

- Before updating programme files, we strongly recommend making a backup of all system files. For details, refer to the following:
  - **6.1 Tool—System Data Backup**
  - **6.8 Tool—UM Data Backup**
- The updated PBX resets when the update is complete.
- Once the update starts, the STATUS LED on the front of the PBX flashes in green (120 times per minute) until shutdown.

For **Program Update Type**, select **Immediately** or **Timed Update**.

Immediately (Manual update)

Specify which cards or devices to update, and perform the update immediately.

1. In **Email notification**, specify up to 2 e-mail addresses that will receive a notification when programme files have been updated.
2. Updated programme files that can be used to update cards or devices installed in the system are listed in **Available Program File(s)**. In **Select the target to update**, specify which cards or devices will be updated using the files listed by checking the boxes next to each item.

   Note

   When selecting an item, a warning message may be displayed. Confirm the contents of the warning, and then click **OK** to continue.
3. Click **Apply**.
4. Click **Execute**.
   The programme files are updated to the PBX.

Timed Update (Automatic update)

Specify which cards or devices to update and a time to execute the update.

1. In **Email notification**, specify up to 2 e-mail addresses that will receive a notification when programme files have been updated.
2. Updated programme files that can be used to update cards or devices installed in the system are listed in **Available Program File(s)**. In **Select the target to update**, specify which cards or devices will be updated using the files listed by checking the boxes next to each item.

   Note

   When selecting an item, a warning message may be displayed. Confirm the contents of the warning, and then click **OK** to continue.
3. In **Update Time**, specify the time of day when the update will be executed.
4. Click **Apply**.
5. Click **Execute**.
   The programme files will be updated to the PBX at the specified time.

Note

- For CS programme files, in order for CS cards to be displayed on this screen, the cards must be set to INS, and the ports of the card must be set to OUS.

5.1.3 System Control—Program Update—Plug and Update

The Plug and Update feature allows IP-PTs to be automatically updated to the latest software version when they are registered to the PBX. When Plug and Update is enabled, the version number of the system software stored on the SD Memory Card or USB memory is compared to the system software currently in the IP-PT, after the IP-PT has been registered to the PBX. If the software on the SD Memory Card or USB memory is newer, it is downloaded to the IP-PT. By default, Plug and Update is set to **Off** for Main unit.

1. In **Plug & Update**, select **On** for each to enable this feature.
2. Click **OK**.

5.2 System Control—MOH

5.2.1 System Control—MOH—Install

Sound files on the programmer's PC can be installed to each PBX for use as Music on Hold (MOH).
This screen can be accessed only in On-line mode.

1. Click **Browse** and select a WAV file to install as an MOH file. Only one file may be installed at a time.
2. As uploading the file to the PBX may require some time, a time can be set in **Time Set**.
3. In **BGM No.**, specify which BGM number the MOH file will occupy.
4. Click **Execute** to confirm the settings. If "Now" is set for **Time Set**, the installation will begin at this time.

Note

- Only WAV files can be installed, and file names must not exceed 57 characters in length (including the file extension ".wav"). Only use ASCII characters in file names.
- Files may not be larger than 40 MB in size.
- User (User) level accounts cannot perform this procedure.

5.2.2 System Control—MOH—Delete

MOH files that are occupying BGM numbers can be deleted.
This screen can be accessed only in On-line mode.

1. In **BGM No.**, specify the BGM numbers to delete MOH files from. Specify "All" to delete the data saved in all BGM numbers.
2. Click **Execute** to delete the files of the specified BGM numbers.

Note

- User (User) level accounts cannot perform this procedure.

5.2.3 System Control—MOH—Status / Backup

MOH files stored on a PBX can be downloaded to the user's PC.
This screen can be accessed only in On-line mode.

1. The MOH files saved to the PBX will be listed. Click **Backup** for the file you would like to back up. One file can be backed up at a time.
2. A save file dialogue will appear. Specify the directory on the PC to back up the file to.
3. Click **OK** when finished.

Note

- **Remained Capacity Time** indicates the amount of time available for new MOH files to be added. The amount of time of any MOH files scheduled to be uploaded in **5.2.1 System Control—MOH—Install** is not reflected in this value.
- User (User) level accounts cannot perform this procedure.

5.3 System Control—System Reset

When programming changes or other changes to PBX settings require a system reset, this command allows a reset to be performed remotely from Web Maintenance Console.
When the system is reset, any settings not saved to the System Memory are lost. A backup should be performed before the reset to ensure no data is lost. However, a backup should not be performed if settings or data have recently been imported into the system, because performing a backup would overwrite the imported data with the current PBX settings.
This screen can be accessed only in On-line mode.

1. Confirm the contents of the displayed warning message.
2. Click **Backup** or **Skip** according to the system's status:
   - **Backup**: Click to backup system settings. The system will be reset after the backup has been performed.
   - **Skip**: The system is reset without performing a backup.

If you are logged in to the PBX that is reset using this command, it is necessary to re-log in to Web Maintenance Console to continue programming.

5.4 System Control—System Shutdown

In order to turn off the power to a PBX, it must first be issued a shutdown command using Web Maintenance Console. Follow the procedure below to prepare a PBX for system shutdown.
When the system is shut down, any settings not saved to the System Memory are lost. A backup should be performed before the shutdown to ensure no data is lost. However, a backup should not be performed if settings or data have recently been imported into the system, because performing a backup would overwrite the imported data with the current PBX settings.
This screen can be accessed only in On-line mode.

1. Confirm the contents of the displayed warning message.
2. Click **Backup** or **Skip** according to the system's status:
   - **Backup**: Click to backup system settings. The system will prepare for shutdown after the backup has been performed.
   - **Skip**: The system is prepared for shutdown without performing a backup.
3. The STATUS LED on the front of the PBX will flash amber. When shutdown preparations are completed, the STATUS LED will stop flashing and remain a solid amber. Once the STATUS LED stops flashing, you may turn off the power switch on the back of the PBX.

Section 6

Tool

This section serves as reference for the Tool menu of the Maintenance screen of Web Maintenance Console.

6.1 Tool—System Data Backup

6.1.1 Tool—System Data Backup—Backup to USB

A PBX's system data can be backed up to a USB memory device inserted into the PBX's USB port. At a later time, the USB memory device can be used to restore the backed up system data to a PBX.
This screen can be accessed only in On-line mode.

To back up the system data to a USB memory device

1. Insert a USB memory device into the USB port of the PBX.

   Note

   - To check the inserted USB memory's status, see **4.1.5 Status—Equipment Status—USB**.
   - The USB memory device must be compatible for use with the PBX. For details, refer to "4.10 Connection of Peripherals—USB Interface for USB Memory Device—Using a USB memory device" in the Installation Manual.
2. Select the system data items to backup.
   - **System Data**
     System data includes programming information for the PBX, including extension and network configuration information.
   - **MOH + OGM**
     MOH (Music on Hold) and OGM (Outgoing Message) sound files stored on the PBX are backed up.
   - **Activation Key**
     Activation key files that were installed on the PBX are backed up.

   Any or all of the above items may be selected. However, the system cannot be restored unless **System Data** is specified.
3. Click **Execute** to back up the specified files. If backup data already exists on the USB memory device, it will be deleted. A confirmation message will be displayed. Click **Continue**.
4. A time estimation for the backup will be displayed. Click **Continue**.
5. A progress bar is displayed to indicate the progress of the backup. A message will be displayed when the backup is finished. Click **OK**.

Note

- Unified Messaging (UM) data must be backed up using a separate process. See **6.8 Tool—UM Data Backup**.
- Use a USB memory device with a capacity of at least 512 MB. During the backup process, if an error message is displayed indicating there is not enough free memory space on the USB memory device, delete other unnecessary files on the USB memory device, or use a USB memory device with a larger capacity.
- The following characters cannot be used in the names of the backup files: open bracket, close bracket, space, forward slash ("/"), period ("."), or 0 (zero).

Restoring backed up data from a USB memory device to a PBX

Follow the procedure below to restore the backed up data to a PBX.

Note

The restoration process first requires an initialisation of the PBX, which returns the PBX to its factory default state. Under the following conditions, restoration may not be possible, even though the PBX has been initialised.

- The USB memory device hardware is faulty.
- The data on the USB memory device has become corrupted.

- The USB memory device is removed from the USB port of the PBX during the restoration process.
- The following characters cannot be used in the names of the backup files: open bracket, close bracket, space, forward slash ("/"), period ("."), or 0 (zero).

To minimise the potential of a failed backup, connect the USB memory device to a PC to confirm the USB memory device is operational and that the backup data is intact before starting this restore process.

1. The PBX must be in a powered-off state.
2. Insert the USB memory device with the backup data into the USB port of the PBX.
3. Set the PBX's System Mode Switch to the "SYSTEM INITIALIZE" position.
4. Turn on the PBX's power switch. The STATUS indicator will flash green. Slide the System Mode Switch back to the "NORMAL" position. The restore process will begin and the STATUS indicator will flash rapidly.
5. When the restoration process is completed, the PBX will restart automatically.

6.1.2 Tool—System Data Backup—Backup to NAS

A PBX's system data can be backed up to a NAS (Network Attached Storage) in the PBX's LAN network. This screen can be accessed only in On-line mode.

To back up the system data to a NAS

1. Connect a NAS and PBX.
   Set the parameters necessary to connect the NAS to the PBX (IP address of the NAS, etc.), and then confirm the connection. See **27.4.2 Network Service—[4-2] Other—NAS**.
2. Select the system data items to backup.
   - **System Data**
     System data includes programming information for the PBX, including extension and network configuration information.
   - **MOH + OGM**
     MOH (Music on Hold) and OGM (Outgoing Message) sound files stored on the PBX are backed up.
3. Click **Execute** to back up the specified files. If backup data already exists on the NAS, it will be deleted. A confirmation message will be displayed. Click **Continue**.
4. A progress bar is displayed to indicate the progress of the backup. A message will be displayed when the backup is finished. Click **OK**.

Note

- Unified Messaging (UM) data must be backed up using a separate process. See **6.8 Tool—UM Data Backup**.
- Data backed up from the PBX to a NAS cannot be restored directly from the NAS to the PBX. The backup data must be copied from the NAS to a local PC. Then the data can be restored from the local PC to the PBX.
- The following characters cannot be used in the names of the backup files: open bracket, close bracket, space, forward slash ("/"), period ("."), or 0 (zero).
- When using a NAS, make sure there is sufficient network bandwidth.

PC Programming Manual References

27.4.2 Network Service—[4-2] Other—NAS

6.2 Tool—NDSS Link Data Clear

Clears NDSS Link Data stored in the connected PBX. While this tool clears both monitor extension and monitored extension data, it only clears it at the connected PBX. To clear this data at other PBXs in the QSIG network, it is necessary to run this tool at those PBXs.
This screen can be accessed only in On-line mode.

To clear the NDSS Link Data

When this tree menu item is selected, a confirmation screen will be displayed.

- Click **OK** to clear the data.
- Click **Cancel** to keep the data, and close the screen.

6.3 Tool—Call Pickup for My Group

Allows you to automatically configure settings in **10.6.2 PBX Configuration—[2-6-2] System—Numbering Plan—Quick Dial** and **12.1.3 PBX Configuration—[4-1-3] Extension—Wired Extension—Speed Dial** so that users can answer calls to their Call Pickup Group by pressing "✳0".

To activate this tool

1. When this tree menu item is selected, a confirmation screen will be displayed.
2. Click **Yes**.
   The Group Call Pickup feature number (default: ✳40) + the extension user group number of the extension is assigned to first personal speed dial.

Note

This tool can only be activated if all of the following conditions are met:

– The first Quick Dial setting is empty or is already set to "✳0".
– "✳0" is not used for another feature number.
– The Group Call Pickup feature number has been assigned.
– The Personal Speed Dialling feature number has been assigned.

6.4 Tool—Extension List View

Displays a list of all programmed extension numbers and types. It is possible to sort the information according to Extension Number, Type, Extension Name, Shelf, Slot, or Port. There is also a key-word searching feature.

The types that can be displayed are as follows:

Type	Detail
Intercom	Wired Extension
Portable Station	Wireless Extension (Portable Station)
SIP / IP-PT / S-PS	SIP/IP-PT/S-PS Extension
UM / VM	Unified Messaging UM Group/VPS Voice Mail
ICD Group	Incoming Call Distribution Group
PS Ring Group	Portable Station Ring Group
UM Group	Unified Messaging UM Group
VM(DPT) Group	VM (DPT) Group
VM(DTMF) Group	VM (DTMF) Group
Pager	External Pager
OGM (DISA)	DISA
DSS	DSS Console
DPT-I/F CS	PT-interface CS
SVM	Simplified Voice Message
MODEM	MODEM
ISDN Remote	ISDN Remote

6.5 Tool—Import

Allows several types of system data files or tables to be imported.
Except for Speed Dial and Caller ID, this option is only available at Installer level.
The files from which data can be imported are files that were previously saved at this or another PBX using the Export tool (see **6.6 Tool—Export**), or comma-separated value (CSV) files. Unsupported file types cannot be opened.
For all tables except **ARS - Routing Plan**, it is possible to edit the CSV file directly using an appropriate editor, before importing.

The types of data that can be imported using this tool, and the matching destination fields, are as follows:

Feature - Speed Dial and Caller ID

Data Type	Import Destination
System Speed Dialling Number	Location
Name	Name
CO Line Access Number + Telephone Number	Dial
CLI Destination	CLI Destination

Related programming: **14.1 PBX Configuration—[6-1] Feature—System Speed Dial**

Note

Imported Speed Dial and Caller ID data can be copied to a specific speed dial destination. The copy range can be specified by selecting the from/to of the index.

Incoming Call - DDI/DID Table

Data Type	Import Destination
Location	Location
DDI/DID Number	Dial In Number
DDI/DID Name	Dial In Name
DDI/DID Destination-Day	Destination-Day
DDI/DID Destination-Lunch	Destination-Lunch
DDI/DID Destination-Break	Destination-Break
DDI/DID Destination-Night	Destination-Night
Tenant Number	Tenant Number
Service Group No.	Group number for VPS answer
VM Trunk Group No.	VM Trunk Group No.
CLI Ring for DDI/DID-Day	CLI Ring - Day
CLI Ring for DDI/DID-Lunch	CLI Ring - Lunch
CLI Ring for DDI/DID-Break	CLI Ring - Break
CLI Ring for DDI/DID-Night	CLI Ring - Night

Related programming: **18.3 PBX Configuration—[10-3] CO & Incoming Call—DDI / DID Table**

ARS - Leading Digit

Data Type	Import Destination
Location	Location
Leading Number	Leading Digit
Additional Number of Digits	Additional Dial Digits
Routing Plan Number	Route Plan Number

Related programming: **16.2 PBX Configuration—[8-2] ARS—Leading Number**

ARS - Except Code

Data Type	Import Destination
Location	Location
Leading Number Exception	Exception Code

Related programming: **16.6 PBX Configuration—[8-6] ARS—Leading Number Exception**

ARS - Routing Plan

Data Type	Import Destination
(no fields to select)	(no fields to select)

Related programming: **16.3 PBX Configuration—[8-3] ARS—Routing Plan Time**

Wired Extension

Data Type	Import Destination
No.	Location (selected automatically)
Extension Number	Extension Number (selected automatically)
Extension Name	Extension Name (selected automatically)

Related programming: **12.1.1 PBX Configuration—[4-1-1] Extension—Wired Extension—Extension Settings**

PS Extension

Data Type	Import Destination
No.	Location (selected automatically)
Extension Number[*1]	Extension Number (selected automatically)
Extension Name	Extension Name (selected automatically)

[*1] This data can only be exported, and cannot be imported.

Related programming: **12.2.1 PBX Configuration—[4-2-1] Extension—Portable Station—Extension Settings**

Quick Dial*

Data Type	Import Destination
No.	Location
Dial	Dial
Phone Number	Phone Number

Related programming: **10.6.2 PBX Configuration—[2-6-2] System—Numbering Plan—Quick Dial**

SIP Extension

Data Type	Import Destination
No.	Location
Extension Number	Extension Number
Password*	Password

Related programming: **9.16 PBX Configuration—[1-1] Configuration—Slot—V-SIPEXT—Port Property**

V-IPGW GW Settings

Data Type	Import Destination
No.	Location
GW Name	GW Name
GW IP Address	GW IP Address
GW Group	GW Group No.
Connection for IP-GW	Connection for IP-GW
Protocol	Protocol
Progress Tone Send Mode	Progress Tone Send Mode
IP Codec Priority 1st	IP Codec Priority 1st
IP Codec Priority 2nd	IP Codec Priority 2nd
IP Codec Priority 3rd	IP Codec Priority 3rd
Packet Sampling Time (G.711A)	Packet Sampling Time (G.711A)
Packet Sampling Time (G.711Mu)	Packet Sampling Time (G.711Mu)
Packet Sampling Time (G.729A)	Packet Sampling Time (G.729A)
Voice Activity Detection for G.711	Voice Activity Detection for G.711
FAX Sending Method	FAX Sending Method
Maximum Bit Rate	Maximum Bit Rate
FAX Detection Ability	FAX Detection Ability
DTMF	DTMF
Payload Type	Payload Type

Data Type	Import Destination
T38 FAX Max Datagram	T38 FAX Max Datagram
T38 FAX UDPTL Error Correction – Redundancy	T38 FAX UDPTL Error Correction – Redundancy
T38 FAX UDPTL Redundancy count for T.30 messages	T38 FAX UDPTL Redundancy count for T.30 messages
T38 FAX UDPTL Redundancy count for data	T38 FAX UDPTL Redundancy count for data
T38 FAX Rate Management Method	T38 FAX Rate Management Method

Related programming: **9.2.1 PBX Configuration—[1-1] Configuration—Slot—System Property—Main—V-IPGW–GW Settings–Main**

V-IPGW DN2IP

Data Type	Import Destination
No.	Location
Leading Number	Leading Number
Remaining Number of Digits	Remaining Number of Digits
GW No./GW Group Selection	GW No./GW Group Selection
GW Group	GW Group
GW No.	GW No.

Related programming: **9.2.1 PBX Configuration—[1-1] Configuration—Slot—System Property—Main—V-IPGW–DN2IP**

V-SIPGW Settings

Data Type	Import Destination
(no fields to select)	(no fields to select)

Related programming: **9.10 PBX Configuration—[1-1] Configuration—Slot—V-SIPGW—Port Property**

V-SIPGW Provider

Data Type	Import Destination
(no fields to select)	(no fields to select)

Related programming: **9.10 PBX Configuration—[1-1] Configuration—Slot—V-SIPGW—Port Property**

PS Registration

Data Type	Import Destination
(no fields to select)	(no fields to select)

Related programming: **9.34 PBX Configuration—[1-2] Configuration—Portable Station**

Note

Before importing PS registration settings, be sure to de-register any PSs already registered to the KX-NS300 PBX.

To import system data

1. From the **Tool** tree menu, select **Import**, and then click the type of data to import.
2. Navigate to the folder containing the system data file you want to open.
3. Select the file.
4. Click **OK** to open the file.
   If applicable, a list of field names found in the imported file will be displayed.
5. For the **Feature - Speed Dial and Caller ID** table, select the Speed Dial table to which to import the data (system or tenant) from the drop-down list.
6. If required, select import fields.
   When import fields can be selected, the selection screen is displayed automatically. Matching origin and destination fields are entered by default.
   - To change the destination for an import field, select the preferred field from the drop-down list.
   - To not import a field, select the blank option from the drop-down list.
7. Click **OK** to perform the import operation.
   Depending on the type of data imported, the relevant programming screen may be displayed.
   - Click **OK** or **Apply** to complete the import operation.

   If data in a field being imported does not match the required format for the import destination, an error message will be displayed when the import operation is attempted, and the operation will be cancelled. This can occur when, for example, the destination field can only accept numeric data, but the data being imported contains alphabet characters, as the correct fields were not linked together.

Notices Regarding Importing Data from KX-TDA100/KX-TDA200 PBXs to the KX-NS300

Quick Dial

The KX-NS300 only supports an 8-digit Quick Dial format. Therefore, KX-TDA100/KX-TDA200 Quick Dial data in the 4-digit format cannot be imported to the KX-NS300.

6.6 Tool—Export

Allows several types of system data to be exported to files. These files can be used with the Import tool (see **6.5 Tool—Import**) to update another PBX.
Except for **ARS - Routing Plan**, tables are exported as comma-separated value (CSV) files.
Except for Speed Dial and Caller ID, this option is only available at Installer level.

Note

The separator used in CSV files created using the Export tool is decided by the unit specified in List Separator, found in the Windows Control Panel's "Regional Options".

To export system data

1. From the **Tool** tree menu, select **Export**, and then click the type of data to export.
2. Select the check boxes next to the names of the fields to export, and then click **OK**.
3. If a message window is displayed, click **OK**.
4. In the file selection screen, select the **Save** check box, and then click **OK**.

6.7 Tool—Screen Customise

Allows you to specify which Setup and Maintenance screens can be accessed in the User (Administrator) account level.
This option is only available at Installer level.
Selected check boxes will be displayed in the tree menus of Web Maintenance Console to users with the User (Administrator) account level.

To modify displayed screens

1. Click the access level to modify.
2. Select the items that you want to have displayed.
   - Clear the check box beside the names of items you do not want to have displayed.
   - Select the check box beside the names of items you want to have displayed.
3. Click **OK**.

6.8 Tool—UM Data Backup

The UM Data Backup tool can be used to backup and restore Unified Messaging (UM) data.
This screen can be accessed only in On-line mode.
The following voice data can be backed up or restored as individual files. The data can be backed up to a USB memory device connected to the PBX or a NAS.

a. System Prompts
- Installed Prompts
- Custom Service Menu
- Company Name
- Company Greetings
- System Mailbox Group Voice Label
- System Caller Name
- Prompt Selection
- Hold Announce Menu

b. Mailbox Prompts
- Owner Name
- Personal Greetings
- Personal Caller ID Name
- Interview
- Personal Group List Name
- EMD List Member Name

c. Mailbox Messages

Note

Mailbox data may not be backed up if the mailbox is in use during the backup process. Additionally, Unified Messaging system response time may be affected when backing up data. For these reasons, we recommend backing up data when the Unified Messaging system is not in use.

The UM Data Backup tool can be executed manually or scheduled to run automatically at regular intervals. Refer to the following:

- **6.8.1 Tool—UM Data Backup—Manual Backup**
- **6.8.2 Tool—UM Data Backup—Scheduled Backup**

6.8.1 Tool—UM Data Backup—Manual Backup

Use this procedure to manually back up Unified Messaging system data. For details on the items that can be backed up, see **6.8 Tool—UM Data Backup**.

1. To back up system prompts, select the check box next to **System Prompts** and select the check boxes of the items you want to back up.
2. To back up mailbox prompts, select the check box next to **Mailbox Prompts** and select which prompts to back up.
3. To back up the prompts for specific mailboxes, click **Mailbox Prompts** to open the mailbox list. Check the top checkbox to select all mailboxes, or select the mailboxes for which you wish to back up prompts, then click **OK**.
4. To back up mailbox messages, check the box next to **Mailbox Messages** button and click **Mailbox Messages** to open the mailbox list. Select the top check box to select all mailboxes, or select the mailboxes you wish to back up, and then click **OK**.
5. Select the destination for the backed up data:
   - **Local PC**: After the backup is started, a file download will begin in your web browser. Specify a location on your local PC to save the backup data.
   - **USB Flash Drive (Main Unit)**: Back up the data to a USB memory device connected to the Main unit. When **USB Flash Drive (Main Unit)** is selected, a folder selection menu becomes active. Specify a folder on the USB memory device for saving the backup data.
   - **NAS**: Back up the data to a NAS. When **NAS** is selected, a folder selection menu becomes active. Specify a folder on the NAS for saving the backup data.
   - **Note**

     Before selecting this option, make sure that a USB memory device is connected to the Main unit.
6. Click **OK** to start the backup.

Note

- The system will prepare the data to be backed up, and the backup will begin about 30 seconds later. The time needed to backup the data will vary depending on the communication speed and the amount of data that is being backed up.
- Deleted messages will not be backed up when backing up Mailbox Messages.
- When **Local PC** is selected, individual messages that are larger than 100 MB cannot be backed up.
- Depending on your browser or your browser's settings, a prompt may appear during the backup for each file to be downloaded. Be sure to select an action for each prompt that appears.

6.8.2 Tool—UM Data Backup—Scheduled Backup

You can schedule backups in advance. The Unified Messaging system will automatically back up the selected data at the scheduled times to a USB memory device or NAS connected to the PBX. (Scheduled backups cannot be made to a local PC.) For details on the items that can be backed up, see **6.8 Tool—UM Data Backup**.

Follow the procedure below to schedule an automatic backup.

1. Click ➕ to create a new scheduled backup.
2. Enter a description for the backup.
3. Set the frequency (daily, weekly, etc.) and time of day when the backup should take place.
4. Check the desired item(s) to backup.
5. Click **Edit** next to **Mailbox Prompts**.
6. Check either **All Mailboxes** or select the mailboxes you wish to backup.
7. Click **OK**.
8. Click **Edit** next to **Mailbox Messages**.
9. Check either **All Mailboxes** or select the mailboxes you wish to backup. You can also specify the following backup conditions:
   - **Retention Days**: Back up only messages that have been stored on the system for at least the number of days specified.
   - **Remaining mailbox Capacity (min)**: Only perform a backup if the remaining mailbox capacity has reached the specified amount.
   - **Delete After Backup**: Specify to delete messages that have been backed up from the mailbox.
   - **Message Type**: Specify to back up all messages, or only messages marked as "old".

   Note

   An invalid combination of these settings may prevent a backup from occurring. For example, if a mailbox is full, but there are no messages older than the number of days specified in **Retention Days**, or no messages are marked as "old", the backup will not be performed.
10. In **System Backup**, select **USB Flash Drive (Main Unit)** or **NAS**, and then specify the folder on the selected device where you want to save the system backup file.
11. Click **OK**.
12. In **Status**, select **Enable** and click **OK**.

Note

- Up to 20 backup events can be scheduled.
- If a backup is scheduled, but a USB memory device is not connected to the PBX at the time of the scheduled backup, the backup will not be performed.
- When using a NAS, make sure there is sufficient network bandwidth.

Editing a scheduled backup

1. From the Scheduled Backup screen, select the backup you wish to edit.
2. Click **Edit**.
3. Edit the settings as desired.
4. Click **OK**.

Deleting a scheduled backup

1. From the Scheduled Backup screen, select the backup you wish to delete.
2. Click **Delete**.
3. Click **Yes**.
4. Click **OK**.

6.9 Tool—UM Data Restore

Follow the procedure below to restore data backed up using the UM Data Backup tool.
This screen can be accessed only in On-line mode.
For more information about the UM Data Backup tool, see **6.8 Tool—UM Data Backup**. You can restore data from a USB memory device connected to the PBX or from a file on your local PC.

1. Select the check boxes of the items to restore.
2. In **System Restore**, select **Local PC** or **USB Flash Drive (Main Unit)**.
   - **Local PC**
     Click **Browse** and select a backup file from your local PC. The file must have been saved using the UM Data Backup tool.
   - **USB Flash Drive (Main Unit)**
     When **USB Flash Drive (Main Unit)** is selected, the folder selection menu becomes active. Specify the folder on the USB memory device where the backup data is saved.
   - **NAS**
     When **NAS** is selected, the folder selection menu becomes active. Specify the folder on the NAS where the backup data is saved.

   Note

   Before selecting **USB Flash Drive (Main Unit)**, make sure that the USB memory device with the backup data is connected to the Main unit.

   ### To restore a single file:

   Files that match the selected types of items to restore will be highlighted.
   Click a file in the list to display its name in the text box. You can also click a folder name to display that folder's contents, and then click a file to select it.

   ### To restore multiple files at once:

   Folders whose contents match the selected types of items to restore will be highlighted.
   Click a folder in the list to display its name in the text box. You can also click a folder name to display that folder's contents, and then click a folder to select it.

   Note

   When restoring data from a local PC, up to 40 files can be selected at one time. When there are a large number of files to restore, they should be restored from the folder on the USB memory device.
3. Click **OK** to restore the selected file or folder of files.
   - **Local PC**
     The results of the data restore will be downloaded from the PBX as a text file called "UM_data_restore_result.txt". Save the file to your local PC to view its contents.
   - **USB Flash Drive (Main Unit)**
     The results of the data restore will be saved in a text file called "UM_data_restore_result.txt" on the USB memory device. To view this file, you must connect the USB memory device to a PC and then open the text file.
   - **NAS**
     The results of the data restore will be saved in a text file called "UM_data_restore_result.txt" on the NAS. To view this file, you must connect to the NAS and copy to a PC and then open the text file.

Note

- When restoring multiple items, only files that match the items for which check boxes have been selected will be restored. Also, even if data exists in the specified folder of the USB memory device, the data will not be restored unless the check box of the matching item has been selected.
- Data in sub-folders of a selected folder will not be restored.
- If more than one file matches a selected item, the newest file will be restored.

- The following characters cannot be used in the names of the backup files: open bracket, close bracket, space, forward slash ("/"), period ("."), or 0 (zero).
- The backup file names stored on the USB memory device should not be changed. If the file names are changed, the system may not be able to detect which backup files correspond to which UM data items.
- A backed up message cannot be restored to the subscriber's mailbox if the mailbox still contains a New/Old/Deleted copy of the same message.
- Voice data recorded by users in a KX-TVM series VPS can be converted and used as voice data in the KX-NS300's Unified Messaging system. For details, refer to "5.3 Starting Web Maintenance Console—KX-TVM System Prompt and Mailbox Data Import" in the Installation Manual.

6.10 Tool—UM Backup History

The following records for backup that have been performed can be checked on this screen:

- Description
- Parameters
- Completion Status
- Date & Time
- Total Elapsed Time (HH:MM:SS)

This screen can be accessed only in On-line mode.

6.11 Tool—DXDP All OUS

Sets the status of all DXDP/XDP extension ports to "OUS" simultaneously for the PBX.

To set all DXDP/XDP ports to OUS for the PBX

1. Access **Tool—DXDP All OUS** from the Maintenance Screen tree view.
2. Click **OK**.

6.12 Tool—Contact information

Dealers can set contact information for the user of the PBX here. When users select this tree menu item, this information will be displayed for the user's reference.

1. Input the following information, and then click **OK**.
   - Company Name
   - Telephone Number
   - Fax Number
   - Address
   - URL
   - Email Address

6.13 Tool—UT Option Setting

Option settings can be specified for KX-UT series SIP phones on a system-wide level.

Note

The following apply when programming in On-line mode only:

- To set these parameters, all installed V-UTEXT8 cards must first be set to OUS. For details, see **9.1 PBX Configuration—[1-1] Configuration—Slot**.

Numbering Plan for UT Series Terminal

One or more number dialling plans can be specified for KX-UT series SIP phones. Enter the dial plan text string into the text box, and then click **OK**. A dial plan text string may also be copied and pasted into the text box from another source.

Note

- For more information about dial plans, refer to the Administrator Guide of the relevant KX-UT series SIP phone.
- You can enter up to 500 characters in the dial plan text box.
- You can assign up to 20 dial plans, separating them with a "|" (vertical bar).
- You can assign up to 32 digits per dial plan.
- When **OK** is clicked, the entered text string will be validated. If there is a validation error, a message will be displayed.

Timer for UT Series Terminal

This timer specifies for KX-UT series SIP phones how long the system waits for another digit to be dialled before determining that dialling has finished. This value will apply for all KX-UT series SIP phones connected to the PBX. Specify a number of seconds in **Extension Inter-digit (s)**, and then click **OK**.

6.14 Tool—URL Information

The URL address for downloading the IMAP tool can be specified on this screen. This URL address will be used for the **Unified Messaging Plug in** download button displayed to users when they view the **Unified Message** tab of their profile in the **User** menu. For details, see **8.2.1 Users—Add User—Single User**.

Specify a valid URL address for **Unified Messaging Plug in**, and then click **OK**.

6.15 Tool—SVM (Simplified Voice Message)

6.15.1 Tool—SVM (Simplified Voice Message)—Delete All Recording

Deletes all voice messages recorded by the SVM feature.

To delete SVM recording data

1. Access **Tool—SVM (Simplified Voice Message)—Delete All Recording**.
2. Click **OK**.

6.15.2 Tool—SVM (Simplified Voice Message)—Check Current Usage

Displays information on the voice messages stored by the SVM feature. For each message, the type of message and the associated extension are displayed.

To check the current usage

1. Access **Tool—SVM (Simplified Voice Message)—Check Current Usage**.

Section 7

Utility

This section serves as reference operating instructions for the Utility menu of the Maintenance screen of Web Maintenance Console.

7.1 Utility—Diagnosis

7.1.1 Utility—Diagnosis—Card Diagnosis

Performs diagnostic tests on cards installed in the PBX, to identify the source of problems.
If any of the tests listed here returns the result "NG" ("No Good"), contact your dealer.
When testing is complete, any cards that were set to OUS status must be returned to INS status if they are to be used again.
This screen can be accessed only in On-line mode.

Card Test

Tests the relevant functions of a card to ensure that it is operating correctly. The tests carried out vary according to the type of card being tested.

The tests that are performed on each card are listed below.

Test Type	Available Cards
Local loop back diagnosis	DLC2, DLC8, DLC16, LCOT6 (Pre-installed/Option), PRI30/E1
DTMF Receive test port	DHLC4, MCSCL8, MCSLC16 (Pre-installed/Option)
PT loop back diagnosis	DLC2, DLC8, DLC16, DHLC4

To perform a card test

1. Click on the **Status** cell of the card to be tested, and set it to "OUS".
2. Click on the cell showing the card type.
   A new window will be displayed.
3. Select the **Card Test** option, and then click **Execute**.
   The error report will be displayed. When all tests are completed, the words "Test End!" will be shown on the last line of the output.
4. Select an option:
   - Click **Capture** if you want to save the displayed information.
     1. Specify a save destination and file name.
     2. Click **Save**.
   - Click **Cancel** to return to the Diagnosis screen.

7.1.2 Utility—Diagnosis—Ping

Performs a connection test on network devices. This function sends echo requests to a particular IP address across an IP network, and displays the result of responses and round-trip time.
This screen can be accessed only in On-line mode.

To perform a Ping test

1. Enter a specific IP address in the **IP Address** box.
2. Click **Test** to perform the test.
   The result will be displayed.
3. Select an option:
   - Click **Capture** if you want to save the displayed information.
     1. Enter a file name, or select a file to overwrite.
     2. Click **Save**.
   - Click **Cancel** to return to the Ping screen.

7.2 Utility—File

7.2.1 Utility—File—File Transfer PC to PBX

Copies PBX system data files from the connected PC to the System Memory installed in the PBX. Pre-existing files in System Memory Card are overwritten.
This option is only available at Installer level when programming in On-line mode.

To install new main system data that has been copied to the PBX, use the System Reset utility (see **5.3 System Control—System Reset**) for DFSYS files.

The PBX examines the header information of a file to determine 2 things: whether the file contains supported data, and which system component the file applies to.
Only files whose header information matches that of a system file supported by the PBX can be transferred. Attempting to transfer any other type of file results in an error message.

The names of all files that can be stored in the System Memory are as follows:

System Data

Name on System Memory	Corresponding Card
DFSYS	Mother Board
DFSYS_R	Mother Board[*1]

[*1] DFSYS-file-format data that is transferred to the PBX is saved as "DFSYS_R".

To transfer files to the System Memory

1. The dialogue box will be displayed.
2. Select the file to upload, and click **OK**.
   A window showing the upload progress will be displayed.
   While transferring files to the System Memory, the PBX automatically renames them according to the header information.
   A message will be displayed when the transfer is complete.
3. Click **OK**.

7.2.2 Utility—File—File Transfer PBX to PC

Copies system data files from the System Memory and SD card installed in the PBX to the connected PC. This option is only available at Installer level when programming in On-line mode.

The files that can be downloaded from the System Memory and SD card are as follows:

File Name	File Type
DFSYS	System data
$SYSERR	Error data
$SYSERR1–$SYSERR9	

- Downloading the DFSYS system data file allows you to make a backup of the configuration of the PBX.
- The error data files are snapshots of the configuration of the PBX taken automatically when a major error causes a system reset. They can be analysed by your dealer to identify the source of a problem. If there is only one error data file, its name will be $SYSERR. If there is more than one file, the files will be numbered in chronological order, up to a maximum of 9 files.

To transfer files to the PC

1. Select the file to download from the list of files on System Memory and SD card.
   Only the files listed in the table above can be downloaded. Selecting any other file will cause an error message to be displayed.
2. Click **Transfer**.
   The Save dialogue box will be displayed.
3. Navigate to the folder in which you want to save the file.
4. Enter a file name.
5. Click **Save**.
   - A window showing the download progress will be displayed.
   - A message will be displayed when the transfer is complete.
6. Click **OK**.

7.2.3 Utility—File—File View

Displays a list of files in System Memory and SD card.
This screen can be accessed only in On-line mode.
The name, date and time of creation, and size of files are displayed.
This utility can also display information on activation key files stored in the in the System Memory and SD card.
The effective date, PFMPR-ID, activation key type, number of activation keys, and expiration date of activation keys are displayed on the Detail screen.

To view information of programme and activation key files stored in the System Memory and SD card

1. Click on the name of the desired programme or activation key file.
2. Click **Detail**. The Detail screen will be displayed. You can select different files from the **File** drop-down menu to view the details for each file.

7.2.4 Utility—File—File Delete

Allows you to delete files from the System Memory.
This option is only available at Installer level in On-line mode.
The DFSYS system file cannot be deleted by this utility.

Note

Programme files cannot be deleted if the Program Update feature's timed update is set, or if an update is currently being performed. For details, see **5.1.2 System Control—Program Update—Update Program File**.

To delete files from the System Memory

1. Click on the file to be deleted.
2. Click **Delete**.
   A confirmation screen will be displayed.
3. Click **OK**.
   The display will return to the **File Delete** screen.

7.2.5 Utility—File—Message File Transfer PC to PBX

Transfers Outgoing Message (OGM) files from the PC to the System Memory.
This option is only available at Installer level when programming in On-line mode.
Uploaded files are automatically renamed as necessary. If the location specified already contains an OGM, it will be overwritten by the newly uploaded message.

To transfer OGMs to the System Memory

1. From the **Utility** menu, select **Message File Transfer PC to PBX**.
2. Select the destination to transfer the OGM files to from the drop-down list, and then click **Browse**.
   The Open dialogue box will be displayed.
3. Select the message files to upload. The files must be in the WAV format.
   It is possible to select multiple files.

   Note

   - When selecting files to copy to the PBX, the file names (apart from the file extension) cannot be more than 33 characters in length.
   - When selecting G.711 codec WAV files to copy to the PBX, the total file size of all selected files combined cannot exceed 32 megabytes.
4. Click **OK**.
   - The files will be uploaded. Files that do not contain message data will be ignored.
   - An index number (01 to 64) will be appended automatically to the file names of message files transferred to the PBX.
   - When complete, the display will return to the main screen.

7.2.6 Utility—File—Message File Transfer PBX to PC

Transfers Outgoing Message (OGM) files from the System Memory to the PC.
This option is only available at Installer level when programming in On-line mode.

To transfer OGMs to the PC

1. From the lower drop-down list, select the messages to transfer.
   - To transfer a certain message, select the number of that message.
   - To transfer all messages at once, select "ALL".

   The Save dialogue box will be displayed.
2. Enter a file name.
3. Click **Save**.
4. Click **OK**.
   - When you choose to transfer all messages, each message is saved as an individual file, with a number appended to the file name corresponding to that message's location in the System Memory.
   - When complete, the display will return to the main screen.

7.3 Utility—Log

7.3.1 Utility—Log—Error Log

Collects and displays system error information.
Whenever there is a system failure, the PBX stores the error code generated. The connected PC collects all of these codes, along with other information, and displays an explanatory error message.
This screen can be accessed only in On-line mode.

The functions of the buttons on this screen are as follows:

Button	Function
Cancel	Closes the Error Log screen without saving.
Save	Saves the currently displayed Error Log information as a text file.
Minor	Displays minor errors, which affect only a certain part of system operation.
Major	Displays major errors, which affect operation of the whole system, or result in system failure.
Clear	Erases the stored error log information from both the screen and the PBX.
Log Information	Displays probable causes of the errors and their solutions.

The items displayed on screen are as follows:

Item	Description
Date	The date of the error detection.
Time	The time of the error detection.
Error Code	The 3-digit error code assigned by the PBX.
Sub Code	**SMDR**: The 8-digit sub code of the relevant hardware (BBWXYYZZ). **Web Maintenance Console**: The 6-digit sub code of the relevant hardware (WXYYZZ). For information about the digits of the Sub Code, refer to table "Sub Code Details" below.
Error Message	A description of the error.
Log Information	Displays probable causes of the errors and their solutions.

Sub Code Details

Sub Code	Description
BB	00

Sub Code	Description
W	**Slot Type** **For physical slots (including physical slots of Expansion Units)** – " " (blank) **For KX-NS300 virtual slots** – "*" (asterisk)
X	**Shelf Number** • – KX-NS300 unit: 1 – Expansion Unit: 2–4 – Non-PBX process: 5
YY	**Slot Number** **When X is not 5** **Physical shelf** Mother board slot: 00 Regular slots: 01–07 **Expansion Unit** EXP-S card: 00 Optional physical service card slots: 01–05 **Virtual shelf** Virtual Trunk slots: 01–04 Virtual Extension slots: 05–08 Virtual IP-CS slots: 09–12 **When X is 5** YY: Process code
ZZ	**Port Number** **When X is not 5** ZZ: Optional service card port number (01–XX) **When X is 5** ZZ: Process number (determined by each process)

Note

When there is no parameter for slot and port number, YY and ZZ will be displayed as "00".
Example: Sub code for the mother board = "00 10000"

7.3.2 Utility—Log—Syslog

Displays a log of system events. Each entry in the log includes the following information:

- **Type**: Describes the type of system event.
- **Date**: The date and time the system event occurred.
- **Message**: Details about the system event.

This screen can be accessed only in On-line mode.

7.3.3 Utility—Log—Web-MC Event Log

The Web-MC Event Log retains information about user interaction with Web Maintenance Console.
This screen can be accessed only in On-line mode.
The items displayed on screen are as follows:

Item	Description
Date	The date of the event.
Time	The time of the event.
User	The account name of the user accessing Web Maintenance Console.
Description	A description of the action taken by the user. (i.e. "Login to Web-MC")
IP Address	The IP address of the PC used to access Web Maintenance Console.

To save the event log as a text file

1. From the Web-MC Event Log screen, select **Save**.
   The Save dialogue box will be displayed.
2. Enter a file name.
3. Click **Save**.

To clear the event log

1. From the Web-MC Event Log screen, select **Clear**.

Note

Users logged in to a Main unit can see all events.

7.3.4 Utility—Log—UM System Log

You can export a log of events from the Unified Messaging system for troubleshooting purposes.
This screen can be accessed only in On-line mode.

1. Click **OK** to export a UM System Log file.
2. Click **Save** to save the data to a local file.
3. Click **OK**.

7.3.5 Utility—Log—Call Control Log

Collects and displays Logical Partitioning Call Control Log information.
To show the setting change information for the Logical Partitioning feature, press the **Condition** button.
To show the call restriction status of the Logical Partitioning feature, press the **Status** button.

Condition

Item	Description
Date	The date on which the setting change of the logical partitioning feature occurred.
Time	The time at which the setting change of the logical partitioning feature occurred.
Information	"Logical Partition" is displayed.
Status	The new setting status of the following settings is displayed. 9.6 PBX Configuration—[1-1] Configuration—Slot—UM Port Property—Main—◆ Area ID for logical partition 10.9 PBX Configuration—[2-9] System—System Options—Option 2—◆ Applying logical partitioning

Status

Item	Description
Date	The date on which the call restriction event from the logical partitioning feature occurred.
Time	The time at which the call restriction event from the logical partitioning feature occurred.
Function	The call restriction types are as follows: – CO call – CO-CO call – Conference call
Information	The restricted extension number and/or trunk number is displayed.
Status	"Restricted (Logical Partitioning)" is displayed.

7.4 Utility—Monitor/Trace

7.4.1 Utility—Monitor/Trace—ISDN/QSIG Protocol Trace

This utility collects protocol trace data from the PRI card, and displays it on the PC.
This option is only available at Installer level in On-line mode, and requires that the target PRI card be set to INS status.
Protocol trace data is continually accumulated on ISDN cards, and 3 types of data can be downloaded:

- **Real Time Trace**: Pseudo-real-time data is collected through data polling at one-second intervals. The displayed information is updated beginning when the **Start** button is clicked.
- **Accumulation Trace**: Previously accumulated data is retrieved and displayed.
- **Error Accumulation Trace**: Previously accumulated error data is retrieved and displayed. This trace shows the data snapshot that is taken just before a card resets.

To view trace data

1. From the **Shelf-Slot No.** drop-down list, select the target slot. Each card will be preceded by a 2-digit number, following the pattern "X-Y":
   - **X**: Shelf number (1-4)
     - 1: KX-NS300 basic unit
     - 2: Expansion Unit1
     - 3: Expansion Unit2
     - 4: Expansion Unit3
   - **Y**: Slot number (1-7)
2. From the **Trace Data Type** drop-down list, select the type of data to view.
3. Click **Start**.
   Trace information will be displayed.
4. Select an option:
   - Click **Capture** to save the displayed trace information.
   - Click **Clear** to clear the screen display.
5. Click **Cancel** to return to the main screen.

7.4.2 Utility—Monitor/Trace—V-IPGW Protocol Trace

This utility collects trace data of protocol activity from V-IPGW4 card.
This option is only available at Installer level in On-line mode, and requires that the target V-IPGW4 card be set to INS status.

To save trace data to the System Memory

1. From the **Utility** menu, select **V-IPGW Protocol Trace**.
   When the progress bar disappears, the protocol trace is complete. The trace data has been saved to the System Memory (file name: "PRTH323").

To transfer trace data to the PC

1. Click the **File Transfer PBX to PC** link to access the file transfer screen.
   The list of files will be displayed.

   Note

   The file transfer screen can also be accessed from the tree menu (see **7.2.2 Utility—File—File Transfer PBX to PC**).
2. Select the desired trace data file.
3. Click **Transfer**.
4. Navigate to the folder in which you want to save the file.
5. Enter a file name.
6. Click **Save**.
7. Click **OK**.

7.4.3 Utility—Monitor/Trace—V-SIPGW Protocol Trace

The trace data of protocol activity can be collected from the V-SIPGW4 card and saved to a PC using the V-SIPGW Protocol Trace.
This option requires that the target V-SIPGW4 card be set to INS status.
This option is only available at Installer level in On-line mode.
Follow the steps below to trace and file V-SIPGW4 card protocol activity:

To save trace data to the System Memory

1. From the tree menu, select **V-SIPGW Protocol Trace**.
   When the progress bar disappears, the protocol trace is complete. The trace data has been saved to the System Memory (file name: "PRTSIPC").

To transfer trace data to the PC

1. Click the **File Transfer PBX to PC** link to access the file transfer screen.
   The list of files will be displayed.

   Note

   The file transfer screen can also be accessed from the tree menu (see **7.2.2 Utility—File—File Transfer PBX to PC**).
2. Select the desired trace data file.
3. Click **Transfer**.
4. Navigate to the folder in which you want to save the file.
5. Enter a file name.
6. Click **Save**.
7. Click **OK**.

7.4.4 Utility—Monitor/Trace—CS Status Monitor

This utility monitors the status of CSs. CSs receive data from other CSs that they are currently synchronised with. **Current Sync CS** information is displayed for IP-CSs that are in INS status.
This option is only available at Installer level in On-line mode.

The displayed items for the **Current Sync CS** of each CS are as follows:

Item	Description
CS Type	Type of CS that each CS is currently synchronised with.
Shelf	Shelf number of the CS that each CS is currently synchronised with.
Slot	Slot number of the CS that each CS is currently synchronised with.
Port	Port number of the CS that each CS is currently synchronised with.
CS / Repeater	Indicates whether the CS that each CS is currently synchronised with is a CS or Repeater.
CS Name	Name of the CS that each CS is currently synchronised with.
CS ID	12-digit ID number of the CS that each CS is currently synchronised with.
Monitored Value	Monitored value (dBm) of the CS that each CS is currently synchronised with.
Monitored Level	Monitored level (signal strength level) of the CS that each CS is currently synchronised with.
Error Rate (%)	Error Rate of the CS for each CS that it is currently synchronised with.

To monitor the status of CSs

1. From the **Air Synchronisation Group Number** drop-down list, select the desired Air Synchronisation Group number.
2. From the **Interval Timer** drop-down list, select the number of seconds between each automatic screen refresh.
3. Click **Start** to monitor the status of air synchronisation.
   Monitoring will be performed and the screen will refresh according to the specified interval.
4. Click **Stop** to end monitoring.
5. To refresh the screen manually at any time, click **Refresh**.
6. To collect the monitored data, click **Start Capture**.
7. Click **Stop Capture** to finish and save the monitored data.
   A dialogue box will be displayed.
8. Navigate to the folder in which you want to save the file.
9. Enter a file name.
10. Click **Save**.
    The dialogue box will close.

7.4.5 Utility—Monitor/Trace—UM System Trace (Internal)

Unified Messaging (UM) system processes can be monitored and logged.
This screen can be accessed only in On-line mode.
The following data can be traced and logged for each UM port, or all UM ports:

- DTMF / Dial: data regarding DTMF signals received by the Unified Messaging system.
- Guidance: guidance data that the Unified Messaging system played.
- Message: Unified Messaging system activity for messages such as creating, playing and deleting.
- Process Event: events occurred between Unified Messaging system processes such as Application, Call Processor and DSP.
- Caller ID: received Caller ID information.
- DID: received DID numbers.
- PIN: PINs received by the Unified Messaging system.

Follow the steps below to monitor or log the system trace data.

1. Select **Internal Trace**, **Display**, or **Trace Clear**.
   - **Setting**
     1. Check **Enable / Disable Trace Data**.
     2. Check the data and UM ports you wish to monitor.
     3. Click **OK**.
   - **Display**: Displays the trace data and/or error data.
     1. Check the data and UM ports you wish to monitor.
     2. To include error data, click the **Error Trace** tab and check **Error Data**.
     3. Click **OK**.
     4. The selected data will be displayed in a new window. Click the **Trace Data** or **Error Trace** tabs to switch views. Click **Save Log File** to save a copy of the displayed data.
     5. Click **Cancel** when finished.
   - **Trace Clear**: Clears saved trace data.
     1. Select the trace data to clear.
     2. Click **OK** to clear the selected trace data.
     3. The message "System Trace Clear Successful" will be displayed. Click **OK** to continue.

7.4.6 Utility—Monitor/Trace—E1 Signalling Bit Monitor

Displays reference signalling bit information for all channels of a E1 card that is installed in an Expansion Unit by monitoring sent and received A, B, C and D bits. This utility is intended for use by dealers.
For information about Expansion Units see **9.32 PBX Configuration—[1-1] Configuration—Slot—Expansion Unit1/Expansion Unit2/Expansion Unit3**.
This option is only available at the Installer level, and requires that the target card be set to INS status.
While monitoring is being performed, any displayed bits whose value changes from 0 to 1 or vice versa will be highlighted in red until the next screen refresh is performed.

To view signalling bit information

1. From the **Shelf-Slot No.** drop-down list, select the target slot. Each card will be preceded by a 2-digit number, following the pattern "X-Y":
   - **X**: Shelf number (1-4)
     - 1: KX-NS300 basic unit
     - 2: Expansion Unit1
     - 3: Expansion Unit2
     - 4: Expansion Unit3
   - **Y**: Slot number (1-7)
2. From the **Interval Timer** drop-down list, select the number of seconds between each automatic screen refresh.
3. Click **Start**.
   Monitoring will be performed and the screen will refresh according to the interval specified.
4. Click **Stop** to end monitoring.
   To refresh the screen at any time while monitoring is stopped, click **Refresh**.

7.4.7 Utility—Monitor/Trace—E1 Line Trace

Traces the sent and received signalling bits and dial numbers on the specified channel of the E1 line card. This utility is intended for use by dealers.
For information about Expansion Units, see **9.32 PBX Configuration—[1-1] Configuration—Slot—Expansion Unit1/Expansion Unit2/Expansion Unit3**.
This option is only available at Installer level, and requires that the target card be set to INS status.

To view trace data

1. From the **Shelf-Slot No.** drop-down list, select the target slot. Each card will be preceded by a 2-digit number, following the pattern "X-Y":
   - **X**: Shelf number (1-4)
     - 1: KX-NS300 basic unit
     - 2: Expansion Unit1
     - 3: Expansion Unit2
     - 4: Expansion Unit3
   - **Y**: Slot number (1-7)
2. From the **CH No** drop-down list, select the target channel.
3. Click **Start**.
   Trace information will be displayed. The information is automatically updated whenever the data being monitored changes.
4. Click **Stop** to end the trace.
5. Select an option:
   - Click **Capture** to save the displayed trace information.
     Information will be saved to the PC as a text-format file.
   - Click **Clear** to erase the information.

7.5 Utility—Report

7.5.1 Utility—Report—Digital Trunk Error Report

Displays accumulated information on various types of errors occurring on digital trunks.
This option is only available at Installer level in On-line mode.
The value displayed for each error item is the number of times that each error occurred during the time period selected. Average values for these items vary depending upon many factors, such as the equipment being used, and the distance from the telephone company.

The displayed items are as follows:

Item		Description
Time		Time of error
Slot		Relevant slot and card type
Counter of Digital Trunk Error Logs logged in "Minor Error" Log	Out of SYNC (#300)	Digital trunk out of sync (Loss of Signal)
	RAI (#301)	Digital trunk RAI signal reception
	AIS (#302)	Digital trunk Alarm Indication Signal reception
	Frame Failure (#300)	Digital trunk frame failure (Loss of Frame)
Counter of minor communication error	CRC	Cyclic Redundancy Check error
	SF	Severely errored frame (or Severe Framing Error)
	FE	Frame synchronisation bit-error
	LV	Line Code Violation
	SL	Controlled slip

To view digital trunk information

1. From the **Slot** drop-down list, select the target slot.
   - To generate a report on a specific card, select the slot number and card name.
   - To generate a report on all matching cards simultaneously, select "ALL".
2. From the **Display form** drop-down list, select the time period to view.
3. Click **Execute**.
   The error report will be displayed.

7.5.2 Utility—Report—IP Extension Statistical Information

Displays accumulated statistical information on IP extensions, V-IPEXT8 cards, V-IPCS4 cards, and the DSP card.
This screen can be accessed only in On-line mode.

The displayed items are as follows:

Item	Description
Collection Started Time	Date and time the port was last reset.
Port No.	Number of the port.
RTP Receive Packet Counter	Total number of packets received.
RTP Receive Lost Packet Counter	Total number of packets lost.
RTP Receive Abandoned Packet Counter	Total number of packets abandoned.
RTP Arrive Packet Interval (MAX.) [ms]	Maximum time taken for a packet to arrive.
RTP Arrive Packet Interval (MIN.) [ms]	Minimum time taken for a packet to arrive.

To view IP extension information

1. From the **Card Selection** drop-down list, select the slot number for the card.
2. Click **Execute**.
   The statistical information will be displayed.
3. Select an option:
   - Click **Capture** if you want to save the displayed information.
     1. Enter a file name, or select a file to overwrite.
     2. Click **Save**.
   - Click **Clear** to erase the information and reset the Collection Started Time.
4. Click **Cancel** to return to the main screen.

7.5.3 Utility—Report—UM View Reports

Unified Messaging (UM) system reports can be generated in order to monitor voice mail operations. Reports can be displayed on a PC, printed, or exported.
This screen can be accessed only in On-line mode.

To view a report

1. In the **View Report** tab, select the desired report from the **Report Parameters** drop-down list.
2. Specify a range of mailbox numbers in the **From** and **To** boxes, or click **Select all mailboxes**.
3. Click **View Report**.
   Some reports can be viewed as a table or as a graph. For these reports, select "Table" or "Graph" under **View As** before clicking **View Report**.

To export a report

A report can be printed from Web Maintenance Console or exported as a text file or CSV file.

1. When viewing a report, select **Print Out (PC)**, **Text**, or **Comma-separated values (CSV)** from the drop-down menu.
2. Click **Export**.
3. **If you select Print Out (PC):**
   A print command is sent to the PC. Follow any prompts to print the report.
   If you select Text or Comma-separated values (CSV):
   A file save dialogue is displayed. Specify the folder to export the report file to.

To clear a report

For each report, all data can be cleared. Follow the steps below to clear all report data. Some reports can also be set to automatically clear at specified times.

1. Select the **Report Data Clear (Manual)** tab.
2. Select the desired report from **Report Parameters**.
3. Click **Report Data Clear**.

To automatically clear report data:

1. Select the **Report Data Clear (Scheduled)** tab.
2. Select **Daily**, **Weekly**, **Monthly**, or **Yearly**, and specify the time, the day of week or day of month, and the month, as necessary.
3. Select the desired report from **Report Parameters**.
4. Click **OK**.

Note

For scheduling the Automatic Report Data Clear, if a day is specified that does not exist (i.e., February 31), the Automatic Report Data Clear will not be performed.

Unified Messaging System Reports

Report Type	Description
Mailbox Information Report	The mailbox information report displays configuration parameters (from owner's extension to e-mail options) for a specified mailbox or a range of mailboxes. 50 records are displayed at a time for this report.

Report Type	Description
Call Account Report[*1]	The call account report displays information about outgoing call activity. Information can be shown by UM port or by mailbox. The report includes date, starting time, used port, connection time, called telephone number, call type, exit status of each callout, total callouts number and the connection time for local or long distance call, and total number of outgoing calls. 400 records are displayed at a time for this report.
UM Extn. Usage Report[*1]	The port usage report displays information about each UM port, such as connection time and percentage of time which each UM port was busy.
Memory Card Usage Report[*1]	The memory usage report indicates the amount of storage space used and the amount of available space. Available space is expressed in minutes. Information for the number of messages stored in and deleted from the Unified Messaging system is displayed.
Mailbox Usage Report[*1]	The mailbox usage report displays information for a specified mailbox or range of mailboxes, including the number of recorded messages, the total time of outgoing calls, external messages, message notification, and group message delivery. • Specify the mailboxes for which you want to display a report, then click **View Report**. • Items not marked as "current" are accumulated indications since the last clearing of this report. 100 records are displayed at a time for this report.
Fax Transfer Report[*1]	The fax transfer report displays information about faxes received by the Unified Messaging system and transferred to a fax extension. It includes the fax reception date, the port number used, and the fax transfer status for a maximum of 64 fax messages.
Call Handling Statistic Report[*1]	The call handling statistic report displays both a summary of and details of Unified Messaging activity over a specified period of time for the Automated Attendant service. This report includes the total number of incoming calls, transferred calls, held calls, calls which left a message, the result of transferred calls, etc.
Custom Service Report[*1]	The Custom Service report displays information such as Custom Service settings, message recording status, number of access, time of access, and number of access to each key.
Message Status Report	The message status report provides the status of all messages of specified subscribers.
Subscriber Setup Report	The subscriber setup report displays the basic settings (owner's name, password, personal greeting, etc.) for a specified mailbox or range of mailboxes.
Security Information Report	The security information report displays information about mailbox accesses. The report includes the date of the last change and last access, number of total accesses, login, and failed accesses.

Report Type	Description
Hourly Statistics Report[*1]	The hourly statistics report displays information about the number of incoming or outgoing calls, the connected time per hour, etc.

[*1] This report can be set to be automatically cleared according to scheduled settings.

7.5.4 Utility—Report—E-mail Report

A log of information about e-mail messages sent using the functions of the PBX can be viewed in the E-mail Report.
This screen can be accessed only in On-line mode.
The information in the report includes the following items for each e-mail message sent:

- User name under which the message was sent
- Unified Messaging mailbox number
- Time sent
- Destination e-mail address
- Sending status of the e-mail message

The maximum number of entries included in the report is as follows, depending on the type of the message:

- Voice mail notifications: 5,000 entries
- Missed call notifications: 1,000 entries
- Other e-mail messages (system messages, etc.): 1,000 entries

Note

Messages sent by the PBX, such as system alerts, will list the user as "System" and the mailbox number as "—".

If these maximum amounts are exceeded, older records beyond the maximum amount for each type will be deleted as new entries are recorded. To delete all e-mail report records, click **Delete all E-mail report**.

Exporting the E-mail Report

1. Select an export format from the drop-down list.
2. Click **Export**.
3. A download dialogue for the e-mail report will be displayed. Open the file to view it, or save the file to the PC.

7.6 Utility—Activation Key Installation

Activation keys for various features of the PBX can be installed using this screen. Activation key files are copied from a PC to the PBX and activated. Use the below procedure to install activation key files to a PBX.
This screen can be accessed only in On-line mode.

1. Click **Browse** and specify the directory where the activation key files are stored, and click **Open**.
2. A list of activation key files stored in the specified directory is displayed. Check the boxes next to the activation keys to install to the PBX, and click **Install**.
3. The activation keys will be copied to the Main unit. When installation is complete, the message, "The activation key has been installed and activated successfully!" is displayed.
4. Click **OK**.

Note

You can click the provided link to directly access **9.3 PBX Configuration—[1-1] Configuration—Slot—Activation Key Status** to view activation key information and programme the number of activated IP-GW trunks and IP softphones.

7.7 Utility—Email Notification

7.7.1 Utility—Email Notification—Alert

You can specify e-mail addresses that will receive messages regarding the PBX's status.

System Alarm

An e-mail message will be sent to the specified address when there is a system alarm. The e-mail message will contain details about the alarm.

1. For **Filtering Setting**, select the check boxes to specify whether to receive e-mails when there is a Major alarm, a Minor alarm, or both.
2. Specify one or two e-mail addresses that will receive system alarm alert messages.

   Notice

   Be sure to enter e-mail addresses correctly. If an address is incorrectly entered, an alert will not be received when there is a system alarm, or information regarding the PBX may be sent unintentionally to a third party.
3. In **Subject** enter the text that will be used for the subject header of e-mails that are sent.
4. Click **OK** when finished.

Licence Expiry

When activation keys that are registered to the PBX and have a limited duration are about to expire, an e-mail message can be sent to the specified addresses. When 10 days remain in the duration of a registered activation key, the e-mail will be sent.

1. Specify one or two e-mail addresses that will receive expiry notice messages.

   Notice

   Be sure to enter e-mail addresses correctly. If an address is incorrectly entered, an alert will not be received when activation keys are about to expire, or information regarding the PBX may be sent unintentionally to a third party.
2. In **Subject** enter the text that will be used for the subject header of e-mails that are sent.
3. Click **OK** when finished.

7.7.2 Utility—Email Notification—System Analysis

Send a specific log file to the designated e-mail address(es).
This screen can be accessed only in On-line mode.

1. Check the Log File Type drop-down menu, select a log file to send to the e-mail address.
2. Enter up to 2 e-mail addresses in **Email Address 1** and **Email Address 2**.
3. In **Subject**, enter text to be used as the subject line of the e-mail sent.
4. Click **Execute** and the mail will be sent at that time.

7.7.3 Utility—Email Notification—Test Email

Send a test e-mail to confirm e-mail sending settings are correctly configured.
This screen can be accessed only in On-line mode.

1. Enter up to 2 e-mail addresses in **Email Address 1** and **Email Address 2**.
2. In **Subject**, enter text to be used as the subject line of the e-mail sent.
3. Click **Execute**. A test mail will be sent to the specified address(es).

Mail settings can be viewed and set in **27.2.5 Network Service—[2-6] Server Feature—SMTP**.

7.8 Utility—Command

7.8.1 Utility—Command—UM Command

System commands can be sent directly to the Unified Messaging system using the Commands dialogue. This screen can be accessed only in On-line mode.
Follow the steps below to use the Commands dialogue:

1. Enter the desired command, then click **RUN**. Results from entered commands are displayed.
2. When finished, click **Close**.

7.9 Utility—UM – System Prompts Customisation

The System Prompts customisation screen is used to view, play, add, or delete system prompts. The programmer can also check the prompt number and text for these prompts.
This screen can be accessed only in On-line mode.
The following categories of system prompts can be customised from the System Prompts customisation screen:

a. System Guidance
b. Custom Service Menus
c. Company Greetings
d. Other
- Company Name
- Language Select Menu
- Hold Announce Menu
- Mailbox Group List
- System Caller ID

To customise system prompts, select a tab in the **System Prompts** dialogue box.

Notice

The system prompts initially installed on the SD Memory Card cannot be restored to their original state by initialising or resetting the PBX; any changes made to the initially installed system prompts cannot be undone. Before changing any system prompts, perform a backup of the initial system prompt data. See **6.8 Tool—UM Data Backup** for details. Then, you can restore the system prompts to their initial state by restoring the backup data. See **6.9 Tool—UM Data Restore** for details.

Deleting Prompts

The programmer is able to delete specified system prompts.
To delete a specific system prompt:

1. Select the cell for the desired prompt number.
2. Click **Delete**.

Recording System Prompts

1. Select the desired system prompt to record, and click **Play/Record**.
2. Select "Record from extension" or "Import from recorded file".
   When "Record from extension" is selected:
   1. Specify the extension number of the telephone used for recording, then click **Connect**.
   2. When the specified extension rings, go off-hook.
   3. Click **Record**, **Stop**, or **Play** to record or play a system prompt.
   4. Click **Disconnect**.
   5. Click **OK**.

   When "Import from recorded file" is selected:
   1. Click **Browse**.
      The **Open** dialogue box appears.
   2. Navigate to the folder containing the WAV files you wish to import.
      WAV files must meet the following specifications:
      - G.711 PCM codec
      - 8 kHz, 8-bit sampling rate
      - Monaural
      - A-law or μ-law encoding
   3. Select the desired WAV file.
   4. Click **Open** to import the file.
   5. Click **OK**.

Starting and Stopping System Prompt Playback

1. Select the desired system prompts.
2. Click **Play/Record**.
3. Click **Play** or **Stop**.

7.10 Utility—Automatic Two-way Recording

7.10.1 Utility—Automatic Two-way Recording—Supervisor Setting

Specify the extensions of supervisors that will control the Automatic Two-way Recording feature for agent extensions. These settings may be changed by a programmer with a User (Administrator) account.

1. Click **Add/Delete**.
2. Select supervisor extensions from the list, and click **OK**.
3. Repeat this procedure to add multiple supervisors. Click **OK** when finished.

7.10.2 Utility—Automatic Two-way Recording—Extension Setting

Specify the Automatic Two-way Recording settings for each supervisor. These settings may be changed by a programmer with a User (Administrator) account.

1. From the **Select a Supervisor** drop-down list, select a supervisor (specified in **7.10.1 Utility—Automatic Two-way Recording—Supervisor Setting**).
2. In **UM Destination Mailbox** specify the mailbox where the Automatic Two-way Recording data will be sent. Select **Add New Mailbox** and specify a new mailbox number, or select an existing mailbox from the **Select Mailbox** drop-down list.
3. In **What type of calls to record**, check the boxes to specify if internal calls, external calls, and/or calls made to an incoming call distribution group will be recorded to the mailbox.
4. In **Select User Extensions**, click **Add**.
5. Select the check boxes for the agent extensions that the supervisor will control, and then click **OK**.
6. Click **List View** to confirm the current Automatic Two-way Recording settings for each supervised extension.
7. Click **OK** when you have finished configuring settings and adding agent extensions for a supervisor.

Once these settings have been configured, supervisors can change settings for agent extensions they have been assigned in **8.3.1 Users—Automatic Two-way Recording—Edit a Recording**.

7.10.3 Utility—Automatic Two-way Recording—Extension Setting List

In this list you can view the settings of extensions that are programmed to have calls recorded by the Automatic Two-way Recording feature. Information for each extension, including the extension's supervisor, UM Group number, and Automatic Two-way Recording destination mailbox is displayed.
You can specify which types of calls will recorded for each extension. These settings may be changed by a programmer with a User (Administrator) account.

1. For an extension, select a setting for **Internal Call**, **External Call**, and **ICDG Incoming Only**. (See below for details.)
   - **Internal Call**: Extension-to-extension calls are recorded.
   - **External Call**: Calls with outside parties are recorded.
   - **ICDG Incoming Only**: Only calls that are received by the extension through an incoming call distribution group are recorded.
2. Select **On** or **Off** for that setting.
3. Click **OK** when finished.

The programming items displayed on this screen are as follows.

◆ Extension Number

Indicates the extension number of the extension (reference only).

Value Range

Max. 5 digits (consisting of 0–9)

◆ Extension Name

Indicates the name of the extension (reference only).

Value Range

Max. 20 characters

◆ Internal Call

Specifies whether intercom calls for the extension will be automatically recorded.

Note

Calls between extensions that are connected in a QSIG network are seen as external calls, irrespective of whether an activation key for QSIG enhanced features is used. To enable Automatic Two-way Recording for this type of call, set ◆ **External Call** to **On**.

Value Range

On, Off

Feature Guide References

3.2.1.4 Automatic Two-way Recording for Manager

◆ External Call

Specifies whether trunk calls for the extension are automatically recorded.

Value Range

On, Off

Feature Guide References

3.2.1.4 Automatic Two-way Recording for Manager

◆ ICDG Incoming Only

Specifies whether only trunk calls that are received through an incoming call distribution group to the extension are automatically recorded.

Note

- ◆ **External Call** must be set to "On" to set this item to "On".

Value Range

On, Off

Feature Guide References

3.2.1.4 Automatic Two-way Recording for Manager

◆ Supervisor

Indicates the extension designated as a supervisor that may play, delete, or confirm the information of two-way recordings (reference only).

Value Range

Extension number and user name

PC Programming Manual References

7.10.1 Utility—Automatic Two-way Recording—Supervisor Setting

Feature Guide References

3.2.1.4 Automatic Two-way Recording for Manager

◆ Mailbox Number

Indicates the Unified Messaging mailbox where two-way recordings will be stored (reference only).

Value Range

Mailbox number

PC Programming Manual References

7.10.2 Utility—Automatic Two-way Recording—Extension Setting

Feature Guide References

3.2.1.4 Automatic Two-way Recording for Manager

7.10.4 Utility—Automatic Two-way Recording—Maintenance

Automatic Two-way Recording can be enabled or disabled, or set to record until a specified date and time by a programmer with a User (Administrator) account.

1. To start Automatic Two-way Recording, click **Start**. The button will change to display **Stop**.
   Two-way recording for all designated extensions will continue until one of the following occurs:
   - The **Stop** button is clicked.
   - The two-way recording time limit or memory capacity has been reached.
   - The date and time set in **Recording Period** is reached.
2. To set a specific time when Automatic Two-way Recording will stop:
   a. In **Recording Period**, select **Yes** for **Setting**.
   b. In **Date & Time**, enter a year, month, day, hour, and minute. Click on the calendar and clock numbers to select them.
   c. Click **OK**.
3. To end Automatic Two-way Recording any time, click **Stop**.

7.11 Utility—UM - System Maintenance

Programme settings for Unified Messaging (UM) system maintenance.

System Maintenance Mode

Specifies whether to enable or disable System Maintenance Mode.

System Maintenance Start Time

Specifies the System Maintenance start time.

After specifying the settings on this screen, click **OK**.

Section 8

Users

This section serves as reference operating instructions for the Users menu of the Setup screen of Web Maintenance Console.

8.1 Users—User Profiles

Manage PBX settings on a per-user level. Information for each user account is displayed and can be added, edited, or and deleted by a User (Administrator) or Installer level account.

Note

- For User (Administrator) accounts to change User (User) account settings, the Installer account must use the Screen Customise tool to allow User (Administrator) accounts to view the **Users—User Profiles** screen. For details, see **6.7 Tool—Screen Customise**.
- When a User (User) level account accesses this screen, he may view and edit items for his account as explained in **8.2.1 Users—Add User—Single User**. In addition, some advanced settings are available for User (User) level accounts only. For details, see **8.1.1 Users—User Profiles—Advanced setting**.

The settings that can be changed in the User Profile List for each user are as follows:

Common

Item	Description
First Name	Specifies the first name of the user.
Last Name	Specifies the last name of the user.
User Group	Specifies the user's group. User groups can be set in Extension Settings: • **12.1.1 PBX Configuration—[4-1-1] Extension—Wired Extension—Extension Settings** • **12.2.1 PBX Configuration—[4-2-1] Extension—Portable Station—Extension Settings**
Ext. No.	Specifies the extension number associated with this user. Extension numbers can be set in Extension Settings: • **12.1.1 PBX Configuration—[4-1-1] Extension—Wired Extension—Extension Settings** • **12.2.1 PBX Configuration—[4-2-1] Extension—Portable Station—Extension Settings**
Ext. COS	Select a Class of Service (COS) for the user from the drop-down list. COS settings can be set in **10.7 PBX Configuration—[2-7] System—Class of Service**.
Mailbox No.	Specifies the UM mailbox number for the user.
Mailbox COS	Select a mailbox COS for the user from the drop-down list. Mailbox COS settings can be set in **21.1 UM Configuration—[2] Class of Service**.

FWD/DND

Item	Description
First Name	Specifies the first name of the user.
Last Name	Specifies the last name of the user.
FWD/DND setting - call from CO Mode	Specifies the FWD/DND setting for calls from trunks.
FWD setting - call from CO Destination	Specifies the FWD destination for calls from trunks.

Item	Description
FWD/DND setting - call from Ext. Mode	Specifies the FWD/DND setting for calls from extensions.
FWD setting - call from Ext. Destination	Specifies the FWD destination for calls from extensions.

For settings and details for **FWD/DND** items, refer to the following:
- **12.1.2 PBX Configuration—[4-1-2] Extension—Wired Extension—FWD/DND**
- **12.2.2 PBX Configuration—[4-2-2] Extension—Portable Station—FWD/DND**

Option

Item	Description
Rule of copy to extension name	Determines how the **First Name** and **Last Name** set in **User Profiles** is used for the **Extension Name** of the following settings. • **12.1.1 PBX Configuration—[4-1-1] Extension—Wired Extension—Extension Settings** • **12.2.1 PBX Configuration—[4-2-1] Extension—Portable Station—Extension Settings**

User Controls

- **Add Button**
  To add a user profile for a single extension, click the button to open the Add User Wizard. See **8.2.1 Users—Add User—Single User**.
- **Edit Button**
  To edit information on an individual user level, select a user from the list by clicking on the row of the user to edit, then clicking the button to open the Add User Wizard with the selected user's information filled in. See **8.2.1 Users—Add User—Single User**.
- **Delete Button**
  To delete users:
  1. Check the box(es) next to the user's name(s) and click the button.
  2. A confirmation message will appear. Click **OK**.
  3. The user's information is deleted from the list.
- **Add Range Button**
  To add multiple user profiles for a range of extensions at one time, click the button. See **8.2.2 Users—Add User—Multiple Users**.

Note

- In order to edit the settings of the **Unified Message** tab by clicking the button, you must be logged in to the PBX with the associated UM Group that your mailbox is assigned to. If you are logged in to a PBX that is different from the PBX with the associated UM Group of your mailbox, the following items will be greyed out:
  – **Prompt Registration**
  – **Mailbox Password**
  – **Mailbox Password (Message Client)**
  – **Advanced setting**
  If these items are greyed out, click **Direct Login** to log in directly to the PBX associated with the UM Group of your mailbox to make changes to these items.
- The , , and buttons are not visible for User (User) level accounts.

8.1.1 Users—User Profiles—Advanced setting

When User (User) level accounts access their user profiles, they may view and edit items for their account as explained in **8.2.1 Users—Add User—Single User**. In addition, some advanced settings can also be programmed by users.

Note

The advanced settings described here are displayed only for User (User) level accounts.

Accessing advanced user profile settings

1. Log in Web Maintenance Console using a User (User) level account.
2. In the user profile, click the **Unified Message** tab.
3. Click the **Advanced setting** button.
4. In addition to normal mailbox settings, **Advanced Call Transfer Setting** and **Scenario Setting** will be displayed.

Advanced Call Transfer Setting

By combining the settings for Call Transfer and Incomplete Call Handling, you can create a call handling "scenario" for your extension. Up to 20 scenarios can be created, and a scenario can be assigned to each absent message. Click the **Edit** button in **Advanced Call Transfer Setting** to open the window for programming. Select a Scenario number (1–20) from the drop-down menu, then programme the settings for that scenario. Click **OK** at the bottom of the window when finished.

◆ Scenario Name

Specify a name for the scenario for identification.

Value Range

Max. 32 Characters

Feature Guide References

3.2.2.6 Call Transfer Scenario

◆ Call Transfer Status—Selection

Determines how the Unified Messaging system will handle a call in the selected scenario.

Value Range

None: Rings the subscriber's extension.
Call blocking: Handles the call according to the Incomplete Call Handling for No Answer setting for the subscriber's extension. The subscriber's extension will not ring.
Call screening: The caller is prompted to record his or her name. The Unified Messaging system then calls the subscriber and plays back the caller name. The subscriber can choose whether to answer the call.
Leave a Message: Transfers the caller to the mailbox.
Intercom Paging: Pages the subscriber by intercom.
Transfer to specified Custom Service Menu: Transfers the caller to the specified Custom Service.

Feature Guide References

3.2.2.6 Call Transfer Scenario

◆ Call Transfer Status—VIP Filter

Specifies whether calls from certain telephone numbers will be transferred directly to a specified extension or telephone number.

Note

This setting can only be set to "Enable" when ◆ **Call Transfer Status—Selection** is set to "Leave a Message".

Value Range

Enable, Disable

Feature Guide References

3.2.2.6 Call Transfer Scenario

◆ Call Transfer Status—Telephone Number 1, 2, 3

Specifies the telephone numbers that the VIP Filter setting will be applied to. When a call is received from any of the numbers specified here, the call will be transferred immediately to the destination specified in ◆ **Call Transfer Status—Transfer to (Selection/Other)**.

Value Range

Max. 32 digits

Feature Guide References

3.2.2.6 Call Transfer Scenario

◆ Call Transfer Status—Transfer to (Selection/Other)

Specifies the transfer destination for calls transferred according to the VIP Filter setting.

Value Range

Extension: The call is transferred to the user's extension.
Other: The call is transferred to the telephone number that is specified in Transfer to (Other).

Feature Guide References

3.2.2.6 Call Transfer Scenario

◆ Call Transfer Status—Transfer to specified Custom Service Menu

Select a Custom Service from the drop-down menu if "Transfer to specified Custom Service Menu" is selected for ◆ **Call Transfer Status—Selection**.

Value Range

Custom Service

PC Programming Manual References

23.3 UM Configuration—[4-3] Service Settings—Custom Service

Feature Guide References

3.2.2.6 Call Transfer Scenario

◆ Call Transfer Status—Transfer to specified telephone number - 1

If "None" or "Call screening" is selected for ◆ **Call Transfer Status—Selection**, specifying a telephone number here will transfer the caller to that telephone number.

Note

If "Call screening" is selected, the transfer destination will hear the call screening prompt before the call is transferred.

Value Range

Max. 32 digits (consisting of 0–9, ⋇, and #)

Feature Guide References

3.2.2.6 Call Transfer Scenario

◆ Call Transfer Status—Transfer to specified telephone number 2, 3, 4, 5 (Selection/Other)

If "None" or "Call screening" is selected for ◆ **Call Transfer Status—Selection**, and the call could not be transferred to the number specified in ◆ **Call Transfer Status—Transfer to specified telephone number - 1**, the call will be transferred according to these settings for this scenario, in numerical order of priority.

Note

- This sequence has higher priority than the alternate extension transfer sequence specified in **24.4 UM Configuration—[5-4] System Parameters—Parameters—◆ PBX Environment—Alternate Extension Transfer Sequence (Up to 16 digits / [0-9 * # D R F T X , ;])**.
- If "Call screening" is selected, the transfer destination will hear the call screening prompt before the call is transferred.

Value Range

Other, Extension, Covering Extension
If "Other" is specified, enter a maximum of 32 digits consisting of 0–9, ⋇, and #.

Feature Guide References

3.2.2.6 Call Transfer Scenario

◆ Incomplete Call Handling for No Answer

Specifies how the scenario handles a call when there is no answer.

Note

More than one option can be selected.

Value Range

Leave a Message: Allows the caller to record a message.
Transfer to a covering extension: Transfers the caller to a covering extension.
Page the mailbox owner by intercom paging: Pages the subscriber by intercom.

Transfer to operator: Transfers the caller to an operator.
Return to top menu: Lets the caller return to the top menu and try another extension.
Transfer to specified Custom Service Menu: Transfers the caller to the specified Custom Service.

Feature Guide References

3.2.2.6 Call Transfer Scenario

◆ Incomplete Call Handling for Busy

Specifies how the scenario handles a call when the destination is busy.

Note

More than one option can be selected.

Value Range

Leave a Message: Allows the caller to record a message.
Transfer to a covering extension: Transfers the caller to a covering extension.
Page the mailbox owner by intercom paging: Pages the subscriber by intercom.
Transfer to operator: Transfers the caller to an operator.
Return to top menu: Lets the caller return to top menu and try another extension.
Transfer to specified Custom Service Menu: Transfers the caller to the specified Custom Service.

Feature Guide References

3.2.2.6 Call Transfer Scenario

Scenario Setting

You can select scenarios set in **8.1.1 Users—User Profiles—Advanced setting** for your extension. A scenario can be set temporarily, or scenarios can be selected for use according to the Absent Message setting of the extension of the subscriber. (→ **14.5 PBX Configuration—[6-5] Feature—Absent Message**)
Temporary Scenario: Setting a scenario here will use that scenario indefinitely. A scenario set here will be used regardless of the subscriber's extension status. Selecting "None" will remove the setting.
Absent Message 1–9: The selected scenario will be used when the indicated Absent Message is set at the extension.

8.2 Users—Add User

8.2.1 Users—Add User—Single User

The Add User—Single User screen provides a method to create user accounts and establish PBX settings on a per-user level. When adding a user, the following settings can be specified. This screen will also be displayed with information already entered when editing an existing user.

Note

User (User) level accounts may access this screen to edit their account information, but only the items marked with a "*".

User Information

Item	Description
First Name*	Specifies the first name of the user (max 20 characters).[*1]
Last Name*	Specifies the last name of the user (max 20 characters).[*1]
Change Language*	Select the Web Maintenance Console language displayed for the user from the drop-down list. Users may select different display languages without affecting the display of other users.
Department	Specifies a department description of up to 64 characters.
Section	Specifies a section description of up to 64 characters.
User Group	Select a User Group from the drop-down list. User groups can be set in Extension Settings: • **12.1.1 PBX Configuration—[4-1-1] Extension—Wired Extension—Extension Settings** • **12.2.1 PBX Configuration—[4-2-1] Extension—Portable Station—Extension Settings**
User Level	Select a User Level from the drop-down list. • The Installer level account may select User (User) or User (Administrator) levels. • User (Administrator) level accounts may only select the User (User) level.

[*1] The **First Name** and **Last Name** set on this screen are applied to system settings as follows.

- The **First Name** and **Last Name** are copied to the **Extension Name** for the user's extension number in the following settings.
  A. 12.1.1 PBX Configuration—[4-1-1] Extension—Wired Extension—Extension Settings—Main
  B. 12.2.1 PBX Configuration—[4-2-1] Extension—Portable Station—Extension Settings—Main
  The format of the extension name is determined by the setting in the **User Profiles—Option** tab:
  - **Rule-A: [First Name] [space] [Last Name]**
  - **Rule-B: [Last Name] [,] [First Name]**

  Notice

  If the length of the name copied to the **Extension Name** is longer than the maximum number of characters allowed for the setting, the letters at the end of the name exceeding the maximum will be discarded.

- The **First Name** and **Last Name** are copied to the corresponding **First Name** and **Last Name** on the following screen for the specified mailbox number.
  C. 20.1.2 UM Configuration—[1-2] Mailbox Settings—Full Setting—Mailbox Parameters
- Changing the name settings in the Extension Settings or Mailbox Settings screens listed above will not change the **First Name** or **Last Name** on this screen (the copying function is one-way).

Contact

Item	Description
Extension No.	Select an extension for the user from the drop-down list.
Device	Displays the device type of the selected extension.
Extension PIN*	Specifies the user's extension PIN.[*1]
DDI	Specifies the user's Direct Dial In (DDI) number.
Fax*	Specifies the user's fax number.
Phone (Home)*	Specifies the user's home telephone phone number.
Phone (Mobile)*	Specifies the user's mobile telephone phone number.
Email 1–3*	Specifies the user's e-mail address(es).[*2]

[*1] The **Extension PIN** set on this screen is applied to system settings as follows.

- The **Extension PIN** is copied to the **Extension PIN** for the user's extension number in the following settings.
  A. 12.1.1 PBX Configuration—[4-1-1] Extension—Wired Extension—Extension Settings—Main
  B. 12.2.1 PBX Configuration—[4-2-1] Extension—Portable Station—Extension Settings—Main
- If **Automatic copy to Mailbox Password** is checked when the **Extension PIN** is input, the **Extension PIN** is also copied to the following settings according to the user's designated mailbox.
  - **Mailbox Password** in the **User Profiles—Unified Message** tab.
  - 20.1.2 UM Configuration—[1-2] Mailbox Settings—Full Setting—Mailbox Parameters—◆ Mailbox Password

Notice

If the **Extension PIN** to be copied has less characters than the minimum number of characters required for the **Mailbox Password**, the data will not be copied and an error message is displayed. See **26.1 UM Configuration—[7] System Security—Subscriber—◆ Minimum Password Length (0-16 digits)**.

[*2] The e-mail addresses set for **Email 1–3** on this screen are applied to system settings as follows.

- If **Use for missed call notification** is checked when the **Email 1–3** information is input, the user will receive an e-mail at the address(es) specified when a trunk call is missed.
- If **Automatic copy to UM message notification** is checked when the **Email 1–3** information is input, the input address(es) are copied to the following setting. This process is one-way; changes to the below setting will not change the information input on this screen.
  - 20.1.2 UM Configuration—[1-2] Mailbox Settings—Full Setting—Notification Parameters—◆ E-mail/Text Message Device—Device No. 1, 2, 3—E-mail Address

Notice

If the Activation Key for Unified Messaging E-mail Notification (KX-NSU2xx) is not installed, or the number of activation keys is insufficient, the e-mail address(es) will not be copied and an error message is displayed.

Unified Message

Item	Description
Mailbox Number	Enter the UM mailbox for the user.
Class of Service (COS)	Select a COS for the user from the drop-down list.

Item	Description
Prompt Registration*	Click **Prompt Registration** to open the User Prompt Registration screen. The following prompts can be recorded in this screen: • Mailbox owner name • Personal greetings (No Answer, Busy, After Hour, Caller ID Greeting, Temporary Greeting and Absent Message) • Interview mailbox questions • Personal caller ID name **To record a prompt** Select a prompt number and click **Play/Record**. **When "Record from extension" is selected**: **1.** Specify the extension number of the telephone used for recording, then click **Connect**. **2.** When the specified extension rings, go off-hook. **3.** Click **Record**, **Stop**, or **Play** to record or play a system prompt. **4.** Click **Disconnect**. **When "Import from recorded file" is selected:** **1.** Click **Browse**. The Open dialogue box appears. **2.** Navigate to the folder containing the WAV files you wish to import. **3.** Select the desired WAV file. **4.** Click **Open** to import the file. **5.** Click **Upload**. **6.** Click **OK**. **To start and stop prompt playback** **1.** Select the desired prompt. **2.** Click **Play/Record**. **3.** Click **Play** or **Stop**. **4.** Click **OK**. **To delete a specific prompt** **1.** Select the desired prompt. **2.** Click **Delete**. **3.** Click **OK**.
Mailbox Password*	Click to specify the password for the mailbox. **Note** If **Extension PIN** is input in the **Contact** tab, and **Automatic copy to Mailbox Password** is checked, the extension PIN will be copied to this setting and overwrite any previously input data here.
Mailbox Password (Message Client)*	Click to specify the messaging client password for the mailbox. **Note** This setting requires the installation of an Activation Key for Unified Messaging E-mail Notification (KX-NSU2xx) for the number of users that will be accessing their UM mailbox using a client software programme.

Item	Description
Advanced setting*	Click to view the selected mailbox's settings. See **20.1 UM Configuration—[1] Mailbox Settings**. **Note** When User (User) level accounts access these settings, additional items are displayed. See **8.1.1 Users—User Profiles—Advanced setting**.
Unified Messaging Plug in	Click to open a new window in your Web browser and access the download site for the IMAP Session Controller software.

Telephony Feature

Item	Description
Class of Service (COS)	Select the COS for the user from the drop-down list.
Forward / Do Not Disturb—For external calls*	Specifies the user's FWD/DND settings for trunk calls. For the FWD destination, **Phone (Home)** or **Phone (Mobile)** (as specified in the **Contact** tab), or a manually input number can be specified.
Forward / Do Not Disturb—For internal calls*	Specifies the user's FWD/DND settings for extension calls. For the FWD destination, **Phone (Home)** or **Phone (Mobile)** (as specified in the **Contact** tab), or a manually input number can be specified.
Speed Dialling View/ Edit*	Click this button to open the Speed Dial screen. The appropriate screen (wired extension or portable station) will be opened according to the extension specified for the user.
Flexible Button View/ Edit*	Click this button to open the Flexible Button screen. The appropriate screen (wired extension or portable station) will be opened according to the extension specified for the user.

Login Account

Item	Description
Login ID	Set a login ID for the user. (4-16 characters in length) **Note** Login IDs must be unique for each user.
Password*	Set a password for the user. (4-16 characters in length)
Re-enter*	Re-enter the password for confirmation.

When all relevant information has been set, click **OK** to add or reflect changes to the user account.

Note

If the user changes any of their own settings, they will be applied to the user the next time they log into Web Maintenance Console.

8.2.2 Users—Add User—Multiple Users

The Add User—Multiple Users screen provides a method to create multiple user profiles for a range of extensions at one time.

1. In the **From** and **To** fields, specify the range of extensions to create profiles for.
2. Select the **Create mailboxes with the same number as the extensions** check box if you want to create Unified Messaging mailboxes whose mailbox numbers are the same as the assigned extension numbers.
3. If you choose to create mailboxes in step **2**, select where the mailboxes will be created:
4. Click **OK**.

Settings automatically programmed for each user

- **First Name/Last Name**
  The **Extension Name**, which is the name displayed on extension LCDs, can be copied all at once to the **First Name** and **Last Name** settings for each extension. The format for copying the **Extension Name** can be selected as follows.
  1. Click **Setup** → **Users** → **User Profiles**.
  2. On the **Option** tab, for **Rule of copy to extension name** select one of the following.
     – **Rule-A: [First Name] [space] [Last Name]**
     – **Rule-B: [Last Name] [,] [First Name]**

  For more information, refer to "5.9 Configuration of Users" in the Installation Manual.
- **Login ID**: The extension number (i.e., if the extension is "101", the Login ID for the user will also be "101")
- **Password**: "PWD" + the extension number for the user (e.g., "PWD101")

Note

- When **OK** is clicked, if any extensions within the range specified in step **1** already have user accounts associated with them, the process will not complete, and an error message will be displayed.
- If the **Create mailboxes with the same number as the extensions** check box is selected and a mailbox number has already been assigned to another extension, the user profile will be created without a UM mailbox assigned to it.
- If the maximum number of digits for a mailbox number (◆ **Mailbox No. Max. Length (3-8)** in **24.4 UM Configuration—[5-4] System Parameters—Parameters**) is less than the number of digits for the specified extensions, the maximum number of digits for a mailbox number will be automatically increased to match the number of digits for the specified extensions.
- A maximum of 500 users can be created at once using this feature.

8.3 Users—Automatic Two-way Recording

This screen is accessible only by users designated as Automatic Two-way Recording supervisors. See **7.10.1 Utility—Automatic Two-way Recording—Supervisor Setting**.
This screen can be accessed only in On-line mode.

8.3.1 Users—Automatic Two-way Recording—Edit a Recording

On this screen, a user designated as a supervisor may change Automatic Two-way Recording settings for extensions they are supervising. Information for each extension, including the extension's supervisor, and Automatic Two-way Recording destination mailbox is displayed.
You can specify which types of calls will recorded for each extension.

1. For an extension, click the setting for **Internal Call**, **External Call**, or **ICDG Incoming Only**.
   - **Internal Call**: Extension-to-extension calls are recorded.
   - **External Call**: Calls with outside parties are recorded.
   - **ICDG Incoming Only**: Only calls that are received by the extension through an incoming call distribution group are recorded.
2. Select **On** or **Off** for that setting.

   Note

   To set **ICDG Incoming Only** to "On", **External Call** must first be set to "On".
3. Click **OK** when finished.

8.3.2 Users—Automatic Two-way Recording—Record List

Users designated as supervisors can view and play messages recorded using the Automatic Two-way Recording feature.

1. Select one or more mailboxes, and click **OK**.
2. Messages recorded in the selected mailbox(es) will be displayed. You can filter the list of messages displayed or play a message.
   To filter the list of messages:
   Specify any number of the following conditions, and then click **Search** to display the messages that match those conditions.
   - **Mailbox**: Specify an Automatic Two-way Recording mailbox, or select **ALL**.
   - **Extension**: Specify an extension to view all calls that were recorded using Automatic Two-way Recording for that extension, or select **ALL**.
   - **Status**: Specify the status for the recorded messages in the mailbox.
   - **Internal/External**: Specify whether the recorded conversations were intercom calls or trunk calls, or specify both.
   - **Call Type**: Specify whether the recorded conversations were incoming calls or outgoing calls, or specify both.
     – If **Internal/External** is set to "Internal" or "Both", **Call Type** will be set to "Both".
     – If **Internal/External** is set to "External", **Call Type** can be set to "Incoming", "Outgoing", or "Both".
   - **Phone Number**: Specify the phone number of the party calling the recorded extension.
   - **Caller Name**: Specify the name of the party that called the recorded extension (may not be available for all recorded messages).
   - **Length**: Specify the length of the recorded conversations.
   - **Period**: Specify a time period in which calls were recorded.

To play a message:

For playback on the PC:

1. Select the check box of a message to play.
2. At the bottom of the screen, select **PC**.
3. Click the ▶ button.

The message will be downloaded as an audio file for playback on the PC being used to connect to Web Maintenance Console.

For playback using the supervisor's designated extension:

1. In the **Mailbox** filter, select the mailbox whose messages you want to display, and then click **Search**.
2. Select the check boxes for one or more messages to play.
3. At the bottom of the screen, select **Phone**.
4. Click the ▶ button.

   Note

   If **ALL** has been selected for the **Mailbox** filter, the ▶ button will be disabled. Select a specific mailbox to enable the ▶ button.

5. In the window that appears, enter the extension number in **Specify Extension** of the extension at which to play back the messages, and then click **Connect**.
6. Go off-hook when the extension rings to establish a call with the UM message playback system.
7. During the call, click **Play** to listen to the currently selected message. If multiple messages were selected in step **2**, you can click **Prev** and **Next** to cycle through and listen to the selected messages.
8. When you are finished listening to messages, click **Disconnect** or go on-hook.

8.4 Users—ICDG Management

This screen is accessible only by users designated as an ACD supervisor. This screen can be accessed only in On-line mode.

8.4.1 Users—ICDG Management—Group Monitor

Description

Users designated as an ACD supervisor can specify an ICD group to monitor, set monitoring conditions, and begin monitoring.

◆ Supervisor selection

Selects the ACD supervisor from a drop-down list.
This operation is available only at the User (Administrator) level.
For details about ACD supervisor settings, see **11.5.4 PBX Configuration–[3-5-4] Group—Incoming Call Distribution Group—ACD Supervisor**.

Value Range

Registered ACD supervisors

Feature Guide References

2.2.2.9 Supervisory Feature (ACD)

◆ Start Monitor

Click the **Start Monitor** button to start monitoring the target ICD group. This feature requires the Call Centre Feature Enhancement activation key. If this activation key is not installed, the **Start Monitor** button is greyed out.

Feature Guide References

2.2.2.9 Supervisory Feature (ACD)

◆ Basic Settings—Layout

Specifies the layout of monitoring results.

Value Range

1 Group, 4 Groups

Feature Guide References

2.2.2.9 Supervisory Feature (ACD)

◆ Basic Settings—Select ICD Group

Selects the ICD groups to be managed by the ACD supervisor, from a drop-down list.

Value Range

ICD groups

Feature Guide References

2.2.2.9 Supervisory Feature (ACD)

◆ Options—Member Status View Mode

Specifies the display mode of the status of group members.

Value Range

Standard, Simple

Feature Guide References

2.2.2.9 Supervisory Feature (ACD)

◆ Options—Highlighted Display Settings—Number of Current Waiting Calls (1-30)

Specifies the threshold number of current waiting calls. When this number is matched or exceeded, calls are highlighted on the monitor screen.

Value Range

1–30

Feature Guide References

2.2.2.9 Supervisory Feature (ACD)

◆ Options—Highlighted Display Settings—Waiting Time (0-10 min/10 sec)

Specifies the waiting time after which calls are highlighted on the monitor screen. When this setting is set to "0", all waiting calls are highlighted.

Value Range

0–10’00

Feature Guide References

2.2.2.9 Supervisory Feature (ACD)

◆ Options—Highlighted Display Settings—Colour Mode

Specifies the colour mode of highlighted items on the monitor screen.

Value Range

Mode 1, Mode 2, Mode 3

Feature Guide References

2.2.2.9 Supervisory Feature (ACD)

◆ Options—Highlighted Display Settings—Blinking

Specifies whether highlighted items blink on the monitor screen.

Value Range

Enable, Disable

Feature Guide References

2.2.2.9 Supervisory Feature (ACD)

8.4.2 Users—ICDG Management—ACD Report

Description

On this screen, users designated as an ACD supervisor can create ACD reports on ICD groups after filtering according to group, agent, or call. Filtering types are separated by tabs.

◆ Supervisor selection

Selects the ACD supervisor from a drop-down list.
This operation is available only at the User (Administrator) level.

Value Range

Registered ACD supervisors

Feature Guide References

2.2.2.9 Supervisory Feature (ACD)

◆ Report Profiles

Follow the procedure below to save/load ACD report profiles. The type of ACD report (Group/Agent/Call) and filter conditions are saved in each profile.

1. Click the **Report Profiles** button.
2. To load a previously saved report profile, click a profile to select it, and then click the **Load** button.
3. To save the current report profile, assign a name in **Profile Name** (max. 32 characters), and then click the **Save** button.

Feature Guide References

2.2.2.9 Supervisory Feature (ACD)

◆ Option

Follow the procedure below to set ACD report options.

1. Click the **Option** button.
2. Select the **ACD Report - Export CSV File Format**.

Value Range
Comma(,), Semicolon(;)

3. Click **OK**.

Feature Guide References

2.2.2.9 Supervisory Feature (ACD)

Group

◆ Group—View Report

To display a report according to groups, follow the procedure below. This feature requires the Call Centre Feature Enhancement activation key. If this activation key is not installed, the **View Report** button is greyed out.

1. Enter the report output conditions and click the **View Report** button.
2. The **ACD Report - Group Report** screen is displayed.
3. Results for the following items are displayed.

Item	Description
Incoming Calls	
Total	The number of incoming calls received by the target ICD group.
Answered	The number of incoming calls answered by the target ICD group.
Lost	The number of incoming calls to the target ICD group cancelled by the caller.
Overflow	The number of overflowed incoming calls to the target ICD group.
Talk Time	
Total	The total talking time of answered calls for the target ICD group. (HH:MM:SS)
Average	The average talking time of answered calls for the target ICD group. (HH:MM:SS)
Max.	The longest talking time of answered calls for the target ICD group. (HH:MM:SS)
Wait Time	
Wait Time (Answered)	
Total	The total waiting time of answered calls for the target ICD group. (HH:MM:SS)
Average	The average waiting time of answered calls for the target ICD group. (HH:MM:SS)
Max.	The longest waiting time of answered calls for the target ICD group. (HH:MM:SS)
Wait Time (Lost)	
Total	The total waiting time of cancelled calls for the target ICD group. (HH:MM:SS)

Item	Description
Average	The average waiting time of cancelled calls for the target ICD group. (HH:MM:SS)
Max.	The longest waiting time of cancelled calls for the target ICD group. (HH:MM:SS)
Max. Waiting Calls	The maximum number of calls waiting in the queue of the target ICD group.

4. Reports can be outputted in the following 3 ways.
   - **Graph**: Click the **Graph** button to display the report in graph form on the **ACD Report - Group Graph** screen. Click the **Print** button to print the graph.
   - **Export**: Click the **Export** button to output the report to a local PC as a file.
   - **Print**: Click the **Print** button to print the report.
5. Click the **Close** button to close the **ACD Report - Group Report** screen.

Feature Guide References

2.2.2.9 Supervisory Feature (ACD)

◆ Group—Filter Settings—View Mode

Selects the monitoring view mode from a drop-down list.

Value Range

Group, Hour[*1], Day, Date, Month, Trunk, Caller ID/CLIP

[*1] If **Hour** is selected, set the monitoring range for the target group (0:00–23:59).

Feature Guide References

2.2.2.9 Supervisory Feature (ACD)

◆ Group—Filter Settings—Select Group

To select the target group for creating a report, follow the procedure below.

1. Click the **Select** button.
2. Click an ICD group from those displayed in the **Available Group for ACD Report** window to select it. Up to 64 groups can be selected.
3. Click **==>** to move the selected ICD groups to the **Selected Group for ACD Report** window.
4. To remove ICD groups from the **Selected Group for ACD Report** window, click a group to select it and click **<==**.
5. Click **OK**.

Feature Guide References

2.2.2.9 Supervisory Feature (ACD)

◆ Group—Filter Settings—Select Period

Specifies the target period for the report.

Value Range

Yesterday, Last Week, Last Month, Today, This Week, This Month, Custom Period[*1]

[*1] If **Custom Period** is selected, set **Start Date**/**Start Time**/**End Date**/**End Time** also.

Feature Guide References

2.2.2.9 Supervisory Feature (ACD)

Agent

◆ Agent—View Report

To display a report according to agents, follow the procedure below. This feature requires the Call Centre Feature Enhancement activation key. If this activation key is not installed, the **View Report** button is greyed out.

1. Enter the report output conditions and click the **View Report** button.
2. The **ACD Report - Agent Report** screen is displayed.
3. Results for the following items are displayed.

Item	Description
Total Answer	
Total Answer	The number of calls that the target agent answers.
Talk Time	
Total	The total talking time for the target agent. (HH:MM:SS)
Average	The average talking time for the target agent. (HH:MM:SS)
Max.	The longest talking time for the target agent. (HH:MM:SS)
Login Time	The total login time for the target agent. (HH:MM:SS)
Not-ready Time	The total not ready time for the target agent. (HH:MM:SS)
Wrap-up Time	The total wrap-up time for the target agent. (HH:MM:SS)

4. Reports can be outputted in the following 3 ways.
   - **Graph**: Click the **Graph** button to display the report in graph form on the **ACD Report - Agent Graph** screen. Click the **Print** button to print the graph.
   - **Export**: Click the **Export** button to output the report to a local PC as a file.
   - **Print**: Click the **Print** button to print the report.
5. Click the **Close** button to close the **ACD Report - Agent Report** screen.

Feature Guide References

2.2.2.9 Supervisory Feature (ACD)

◆ Agent—Filter Settings—View Mode

Selects the monitoring view mode from a drop-down list.

Value Range

Agent, Hour[*1], Day, Date, Month

[*1] If **Hour** is selected, set the monitoring range for the target group (0:00–23:59).

Feature Guide References

2.2.2.9 Supervisory Feature (ACD)

◆ Agent—Filter Settings—Select Agent

To select the target agent for creating a report, follow the procedure below.

1. Click the **Select** button.
2. Click an agent from those displayed in the **Available Agent for ACD Report** window to select it. Up to 8192 agents are displayed, and up to 128 agents can be selected from the list.
3. Click **==>** to move the selected agents to the **Selected Agent for ACD Report** window.
4. To remove agents from the **Selected Agent for ACD Report** window, click an agent to select it and click **<==**.
5. Click **OK**.

Feature Guide References

2.2.2.9 Supervisory Feature (ACD)

◆ Agent—Filter Settings—Select Period

Specifies the target period for the report.

Value Range

Yesterday, Last Week, Last Month, Today, This Week, This Month, Custom Period[*1]

[*1] If **Custom Period** is selected, set **Start Date**/**Start Time**/**End Date**/**End Time** also.

Feature Guide References

2.2.2.9 Supervisory Feature (ACD)

Call

◆ Call—View Report

To display a report according to calls, follow the procedure below. This feature requires the Call Centre Feature Enhancement activation key. If this activation key is not installed, the **View Report** button is greyed out.

1. Enter the report output conditions and click the **View Report** button.
2. The **ACD Report - Call Report** screen is displayed.

Item	Description
ACD Report - Call Report	
Start Date	The start date of the call.
Start Time	The start time of the call. (HH:MM:SS)
End Date	The end date of the call.

Item	Description
End Time	The end time of the call. (HH:MM:SS)
Result	The processing result. (Answered/Abandoned/Overflowed)
ICDG	The incoming ICD Group number.
Answering Agent	The answering member. (Extension Name/Extension Number)
Talk Time	The talking time. (HH:MM:SS)
Wait Time	The waiting time. (HH:MM:SS)
Trunk	The incoming trunk group number.
Caller ID/CLIP	The caller's number.

3. Reports can be outputted in the following 2 ways.
   - **Export**: Click the **Export** button to output the report to a local PC as a file.
   - **Print**: Click the **Print** button to print the report.
4. Click the **Close** button to close the **ACD Report - Call Report** screen.

Feature Guide References

2.2.2.9 Supervisory Feature (ACD)

◆ Call—Filter Settings—Select Group

Follow the procedure below to select the target group for creating a report.

1. Click the **Select** button.
2. Click the ICD group name you want to analyse from the ICD group names displayed on the **Available Group for ACD Report** window. (Maximum 64 groups displayed)
3. Click **==>** to move the ICD group you selected in step **2** to the **Selected Group for ACD Report** window. (Maximum 64 groups)
   To delete an ICD group from the **Selected Group for ACD Report** window, click the ICD group name, and then click **<==**.
4. Click **OK**.

Feature Guide References

2.2.2.9 Supervisory Feature (ACD)

◆ Call—Filter Settings—Select Period

Specifies the target period for the report.

Value Range

Yesterday, Last Week, Last Month, Today, This Week, This Month, Custom Period[*1]

[*1] If **Custom Period** is selected, set **Start Date**/**Start Time**/**End Date**/**End Time** also.

Feature Guide References

2.2.2.9 Supervisory Feature (ACD)

◆ Call—Filter Settings—Call Filter Mode

Calls that are the target of an ACD report can be filtered in the following 3 ways.

Value Range

- **Caller ID/CLIP Filter**: Filtering according to caller ID or CLIP
  1. Click **Caller ID/CLIP Filter**.
  2. Set the target caller ID or CLIP (maximum: 10).
- **Talk/Wait Duration Filter**: Filtering according to continuous talking or waiting time
  1. Click **Talk/Wait Duration Filter**.
  2. Select **Talk Time** or **Wait Time** from a drop-down list.
  3. Set the filtering target duration using one of the following 2 methods.
     To set a minimum duration, click **Min.**, and set the duration time (0:00–23:59).
     To set a maximum duration, click **Max.**, and set the duration time (0:00–23:59).
- **Lost Call Filter**: Filtering according to lost calls
  1. Click **Lost Call Filter**.

Feature Guide References

2.2.2.9 Supervisory Feature (ACD)

Section 9

PBX Configuration—[1] Configuration

This section serves as reference operating instructions for the Configuration menu of the PBX Configuration menu of the Setup screen of Web Maintenance Console.

9.1 PBX Configuration—[1-1] Configuration—Slot

The operating characteristics associated with each service card can be programmed.
Move the mouse pointer over an installed card to display the menu of options for that card. To view a summary of status and versions for all cards installed in the PBX, click the **Slot Summary** button (see 9.2 PBX Configuration—[1-1] Configuration—Slot—System Property).

To select a shelf in the PBX

Click one of the following buttons to view the shelf in the PBX:

- **Basic Unit:** View the basic unit.
- **Expansion Unit1:** View the physical card shelf of the Expansion Unit connected to connection port 1 of the EXP-M card.
- **Expansion Unit2:** View the physical card shelf of the Expansion Unit connected to connection port 2 of the EXP-M card.
- **Expansion Unit3:** View the physical card shelf of the Expansion Unit connected to connection port 3 of the EXP-M card.
- **Virtual Slot:** View the virtual card shelf.

To install a new physical card to the PBX

1. Click on the name of the card to install in the list on the right.
   An image of the card will be displayed, and information about the card will be shown.
2. Click and drag the image of the card to the slot, and release it.
   The card will move into the slot space.
3. Click **OK** to confirm.

To add new virtual cards to the PBX

1. Click on the name of the card to install at the top.
2. Click and drag the image of the card to the slot, and release it. The card will move into the slot space.
3. Click **OK** to confirm.

To access card properties

1. Move the mouse pointer over a card.
   A menu will be shown under the mouse pointer.
2. Select **Card Property**.
   The property screen for that card will be displayed.

To access port properties

1. Move the mouse pointer over a card. For combination physical cards, move the mouse pointer over the individual card name.
   A menu will be shown under the mouse pointer.
2. Select **Port Property**.
   The property screen for that card's port or ports will be displayed.

To remove a card from the PBX

1. Move the mouse pointer over the card to remove.
   A menu will be shown under the mouse pointer.
2. Select **Delete**.
3. Click **OK** to confirm.
   The card will be removed.

   Note

   The cards in Slot No.1-No.3 of the Basic Unit and the card in Slot No.1 of the Expansion Unit cannot be deleted because these cards are pre-installed.

To change the status (INS/OUS) of a card (On-line mode only)

1. Move the mouse pointer over the card.
   A menu will be shown under the mouse pointer.
2. Select the desired status:
   - Click **INS** to set the card to in-service status.
   - Click **OUS** to set the card to out-of-service status.

To access IP-PT port properties

1. When you place the mouse cursor over the **IP Phone Registration** button on the Slot screen, the following choices appear. Click an option to open a port properties programming screen:

   IP-PT: For KX-NT300/KX-NT500 series and KX-NT265 (software version 2.00 or later) IP-PTs
   (→ **9.14 PBX Configuration—[1-1] Configuration—Slot—V-IPEXT—Port Property**)

   SIP-MLT: For KX-UT series SIP phones (not available in China)
   (→ **9.20 PBX Configuration—[1-1] Configuration—Slot—V-UTEXT—Port Property**)

   Standard SIP Phone: For third party SIP Phones
   (→ **9.16 PBX Configuration—[1-1] Configuration—Slot—V-SIPEXT—Port Property**)

   Option: Opens the **Site Property—Main** screen.
   (→ **9.2.2 PBX Configuration—[1-1] Configuration—Slot—System Property—Site—Main**)

Card Types Supported by KX-NS300

Installation Type	Card Type	Max. No/ Card Type	Max. No/Line Type	Card Programming
Virtual	V-IPGW4: Virtual 4-Channel VoIP Gateway Card	4	4 (Trunk)	9.11 PBX Configuration—[1-1] Configuration—Slot—V-IPGW—Shelf Property
	V-SIPGW4: Virtual 4-Channel SIP Trunk Card	4		9.8 PBX Configuration—[1-1] Configuration—Slot—V-SIPGW—Shelf Property
	V-IPEXT8: Virtual 8-Channel VoIP Extension Card	4	4 (Extension)	9.13 PBX Configuration—[1-1] Configuration—Slot—V-IPEXT—Card Property
	V-SIPEXT8: Virtual 8-Channel SIP Extension Card	4		9.15 PBX Configuration—[1-1] Configuration—Slot—V-SIPEXT—Card Property
	V-UTEXT8: Virtual 8-Channel SIP Proprietary Extension Card	4		9.19 PBX Configuration—[1-1] Configuration—Slot—V-UTEXT—Card Property
	V-IPCS4: Virtual 4 IP Cell Station Interface Card	4	4 (IP CS)	9.17 PBX Configuration—[1-1] Configuration—Slot—V-IPCS—Card Property
Pre-Installed	LCOT6: 6-port Analogue Trunk Card	1	1 (Trunk)	9.23 PBX Configuration—[1-1] Configuration—Slot—Card Property - LCO type
	DLC2: 2-port Digital Extension Card	1	1 (Extension)	9.21 PBX Configuration—[1-1] Configuration—Slot—Extension—Card Property
	MCSLC16: 16-port SLT Card	1	1 (Extension)	

Installation Type	Card Type	Max. No/ Card Type	Max. No/Line Type	Card Programming
Option - Trunk / Doorphone Slot	LCOT6: 6-port Analogue Trunk Card	1	1 (Trunk)	9.23 PBX Configuration—[1-1] Configuration—Slot—Card Property - LCO type
	PRI30/E1: PRI30/E1 Trunk Card	1		9.25 PBX Configuration—[1-1] Configuration—Slot—Card Property - PRI type 9.27 PBX Configuration—[1-1] Configuration—Slot—Card Property—E1 type
	DPH2: 2-port Doorphone Interface Card	1	1 (Doorphone)	9.33 PBX Configuration—[1-1] Configuration—Slot —DOORPHONE Card—Card Property
Option - Extension Slot	DHLC4: 4-port Digital Hybrid Extension Card	2	2 (Extension)	9.21 PBX Configuration—[1-1] Configuration—Slot —Extension—Card Property
	DLC8: 8-port Digital Extension Card	2		
	MCSLC8: 8-port SLT Card	2		
	DLC16: 16-port Digital Extension Card	1	1 (Extension)	
	MCSLC16: 16-port SLT Card	1		

Card Types Supported by KX-NS320

Installation Type	Card Type	Max. No/ Card Type	Max. No/Line Type	Card Programming
Pre-Installed	MCSLC16: 16-port SLT Card	1	1 (Extension)	

Installation Type	Card Type	Max. No/ Card Type	Max. No/Line Type	Card Programming
Option - Trunk / Doorphone Slot	LCOT6: 6-port Analogue Trunk Card	2	2 (Trunk)	9.23 PBX Configuration—[1-1] Configuration—Slot—Card Property - LCO type
	PRI30/E1: PRI30/E1 Trunk Card	1		9.25 PBX Configuration—[1-1] Configuration—Slot—Card Property - PRI type 9.27 PBX Configuration—[1-1] Configuration—Slot—Card Property—E1 type
	DPH2: 2-port Doorphone Interface Card	1	1 (Doorphone)	9.33 PBX Configuration—[1-1] Configuration—Slot —DOORPHONE Card—Card Property
Option - Extension Slot	DHLC4: 4-port Digital Hybrid Extension Card	2	2 (Extension)	9.21 PBX Configuration—[1-1] Configuration—Slot —Extension—Card Property
	DLC8: 8-port Digital Extension Card	2		
	MCSLC8: 8-port SLT Card	2		
	DLC16: 16-port Digital Extension Card	1	1 (Extension)	
	MCSLC16: 16-port SLT Card	1		

For more information on the virtual cards and other optional cards, see the following sections in the Installation Manual:
→ 4.4 Virtual Cards
→ 4.5 Physical Trunk and Extension Cards
For information about cards supported by Expansion Units, see System Components for Expansion Unit in the Installation Manual.

Common Programming Reference Items

When programming settings for cards, extensions, and other devices using Web Maintenance Console, depending on the screen being accessed, the following items may be listed on the screen for your reference:

Item	Description
Shelf	Indicates the physical or virtual shelf where the card, extension, or device is located in the PBX. • Shelf "1" is the physical shelf of the KX-NS300 PBX. • Shelf "2" corresponds to the Expansion unit connected to EXP-M port 1. • Shelf "3" corresponds to the Expansion unit connected to EXP-M port 2. • Shelf "4" corresponds to the Expansion unit connected to EXP-M port 3.
Slot	Indicates the slot number within the shelf where the card, extension, or device is located.
Port	Indicates the port number assigned to the extension or device.

9.2 PBX Configuration—[1-1] Configuration—Slot—System Property

9.2.1 PBX Configuration—[1-1] Configuration—Slot—System Property—Main

The properties of the PBX system can be specified.

Main

◆ DSP CODEC G.711 only (SIP extension)

Specifies whether or not to only use the G.711 codec for SIP extension calls.

Value Range

Enable, Disable

◆ DSP CODEC G.711 only (IP-GW)

Specifies whether or not to only use the G.711 codec for IP trunk calls.

Value Range

Enable, Disable

◆ DSP CODEC Priority-1 value only (others)

Specifies whether or not to only use the priority 1 codec set for the following types of calls:

- IP extension calls
- SIP trunk calls

Value Range

Enable, Disable

◆ System Speed Dial Download For UT Extensions

Specifies the maximum number of system speed dial entries that will be downloaded to KX-UT series SIP phones.

Value Range

0–300

PC Programming Manual References

9.20 PBX Configuration—[1-1] Configuration—Slot—V-UTEXT—Port Property—Option—◆ System Speed Dial Download

System Status

◆ CPU Usage

Displays the system CPU's current processor load, expressed as a percentage of total capacity (reference only).

Value Range

0–100%

◆ Memory Usage

Displays the amount of system memory currently being used, displayed as a percentage of total capacity (reference only).

Value Range

0–100%

◆ SD card Usage

Displays the amount of SD Memory Card memory currently being used, displayed as a percentage of total capacity (reference only).

Value Range

0–100%

V-IPGW

◆ Call Signalling Model

Specifies whether to carry out a call control (H.225) process directly between the cards or through a gatekeeper.

Value Range

Direct, GateKeeper

◆ Gatekeeper Connection Checking Interval (*60s)

Specifies the time between periodic checks of connection to the gatekeeper.

Value Range

0 (disabled), 1–1440

◆ Terminal type to Gatekeeper

Specifies the connection service type notified to the gatekeeper.

Value Range

Terminal, Gateway

◆ Gatekeeper ID to Gatekeeper

Specifies the authentication ID notified to the gatekeeper.

Value Range
Max. 20 Characters

◆ Bandwidth to Gatekeeper

Specifies the used bandwidth information notified to the gatekeeper.

Value Range
1–255 kbps

◆ Primary Gatekeeper IP Address

Specifies the IP address of the primary gatekeeper.

Value Range
1.0.0.0–223.255.255.255

◆ Primary Gatekeeper Port Number

Specifies the port number of the primary gatekeeper.

Value Range
1–65535

◆ Secondary Gatekeeper IP Address

Specifies the IP address of the secondary gatekeeper.

Value Range
1.0.0.0–223.255.255.255

◆ Secondary Gatekeeper Port Number

Specifies the port number of the secondary gatekeeper.

Value Range
1–65535

◆ H.225 Port Number

Specifies the port number for the H.225 protocol (call control) in an H.323 protocol suite.

Value Range
1–65535

◆ RAS Port Number

Specifies the port number for the H.225 protocol (RAS) in an H.323 protocol suite.

Value Range
1–65535

◆ QSIG Connectionless Tunnelling TCP Port Number

Specifies the TCP port number for connectionless tunnelling between gateway devices at different locations in a QSIG network.

Value Range

1–65535

◆ QSIG Connectionless Tunnelling UDP Port Number

Specifies the UDP port number for connectionless tunnelling between gateway devices at different locations in a QSIG network.

Value Range

1–65535

◆ H.323 Dynamic Port Number

Specifies the starting port number from which 448 contiguous ports are used as dynamic ports.

Value Range

1–65000

V-IPGW–GW Settings–Main

◆ GW Name

Specifies the name of the destination gateway device for programming reference.

Value Range

Max. 20 characters

◆ GW IP Address

Specifies the IP address of the destination gateway device.

Value Range

1.0.0.0–223.255.255.255

◆ GW Group

Specifies the number of the gateway group to which the gateway entry belongs. A maximum of 256 gateway groups can be created.

Value Range

1–256, None

◆ Connection for IP-GW

Enables the use of the Voice Activity Detection feature between the V-IPGW and KX-TDE/KX-TDA IP-GW cards.

Value Range

Disable (TDE), Enable (TDA)

◆ Protocol

Specifies the type of protocol for connectionless tunnelling between gateway devices at different locations in a QSIG network.

Value Range

TCP, UDP

◆ Progress Tone Send Mode

Specifies whether to send call progress tones to the destination. When selecting **External**, call progress tones are audible at the destination.

Value Range

External, Internal

V-IPGW–GW Settings–Option 1

◆ GW Name

Specifies the name of the destination gateway device for programming reference.

Value Range

Max. 20 characters

◆ IP Codec Priority—1st, 2nd, 3rd

Specifies the priority of the codecs to be used. For fax communications, it is necessary to specify **G.711A** or **G.711Mu** for **1st** priority.

Value Range

For 1st:

G.711A, G.711Mu, G.729A

For 2nd and 3rd:

None, G.711A, G.711Mu, G.729A

◆ Packet Sampling Time (G.711A)

Specifies the time interval between measurements (samples) of sound data during a conversation. The smaller this number, the higher the quality of the transmitted sound.

Value Range

20 ms, 30 ms, 40 ms, 50 ms, 60 ms

◆ Packet Sampling Time (G.711Mu)

Specifies the time interval between measurements (samples) of sound data during a conversation. The smaller this number, the higher the quality of the transmitted sound.

Value Range

20 ms, 30 ms, 40 ms, 50 ms, 60 ms

◆ Packet Sampling Time (G.729A)

Specifies the time interval between measurements (samples) of sound data during a conversation. The smaller this number, the higher the quality of the transmitted sound.

Value Range

20 ms, 30 ms, 40 ms, 50 ms, 60 ms

V-IPGW–GW Settings–Option 2

◆ GW Name

Specifies the name of the destination gateway device for programming reference.

Value Range

Max. 20 characters

◆ Voice Activity Detection for G.711

Enables the use of the Voice Activity Detection feature for the G.711 codec. This feature conserves bandwidth by detecting silent periods during a call and suppressing the packets of silence from being sent to the network.

Value Range

Disable, Enable

◆ FAX Sending Method

Specifies the method of transporting the fax signal.

Value Range

G.711 Inband, T.38

◆ Maximum Bit Rate

Specifies the maximum bit rate of the fax signal.

Value Range

No Speed Limit, 2400 bps, 4800 bps, 7200 bps, 9600 bps, 12000 bps, 14400 bps

◆ FAX Detection Ability

Enables the use of the FAX Detection Ability feature. Since fax signals using a codec other than G.711 cannot be received accurately at the destination, this feature automatically switches the codec to G.711 to enable end-to-end fax signal relay over the network.

Value Range

Disable, Enable

PC Programming Manual References

9.2.1 PBX Configuration—[1-1] Configuration—Slot—System Property—Main—V-IPGW–GW Settings–Option 1—◆ IP Codec Priority—1st, 2nd, 3rd

◆ DTMF

Specifies the method to transport DTMF tones.

Value Range

Inband, Outband (RFC2833), Outband (H.245)

◆ Payload Type

Specifies the payload type for DTMF tones using RFC2833. Programming this parameter is only necessary if **DTMF** is set to **Outband (RFC2833)**.

Value Range

96–127

V-IPGW–GW Settings–Option 3

◆ GW Name

Specifies the name of the destination gateway device for programming reference.

Value Range

Max. 20 characters

◆ T38 FAX Max Datagram

Specifies the maximum datagram size when using the T.38 protocol.

Value Range

272–512

◆ T38 FAX UDPTL Error Correction – Redundancy

Specifies whether to enable the redundancy feature when using the T.38 protocol.

Value Range

Disable, Enable

◆ T38 FAX UDPTL Redundancy count for T.30 messages

Specifies the redundancy count for T.30 messages when using the T.38 protocol.

Value Range

0–7

◆ T38 FAX UDPTL Redundancy count for data

Specifies the redundancy count for data when using the T.38 protocol.

Value Range

0–3

◆ T38 FAX Rate Management Method

Specifies the rate management method when using the T.38 protocol.

Value Range

Transferred TCF, Local TCF

V-IPGW–DN2IP

◆ Leading Number

Specifies the leading digits in dialled numbers by which to associate calls with the appropriate destination.

Value Range

Max. 30 digits (consisting of 0–9)

◆ Remaining Number of Digits

Specifies the number of digits to be dialled following the leading number to access the destination.

Value Range

0–29

◆ GW No./GW Group Selection

Specifies the type of destination when making calls: a gateway device or a gateway group.

Value Range

GW Group, GW No.

◆ GW Group

Specifies the number of the destination gateway group. This setting is only available when **GW No./GW Group Selection** on this screen is set to **GW Group**.

Value Range

1–256

◆ GW No.

Specifies the number of the destination gateway device. This setting is only available when **GW No./GW Group Selection** on this screen is set to **GW No.**.

Value Range

1–512

9.2.2 PBX Configuration—[1-1] Configuration—Slot—System Property—Site

The properties of the PBX site can be specified. When you place the mouse cursor over the **System Property** button and click the **Site** button, the **Main** and **NSVM** buttons are displayed. Click a button to open that site property screen.

Main

◆ Site Name

Indicates the site name of the PBX (reference only).

Value Range

Site Name

◆ Location (MIB)

Indicates the **MIB info - SysLocation** setting in 27.3.3 Network Service—[3-3] Client Feature—SNMP Agent (reference only).

Value Range

Max. 255 characters

◆ PBX Region

Indicates the region of the PBX (reference only).

Value Range

PBX Region

◆ IP Address

Indicates the IP address of the PBX (reference only).

Value Range

1.0.0.0 - 255.255.255.255

◆ MAC Address

Indicates the MAC address of the PBX (reference only).

Value Range

00:00:00:00:00:00–FF:FF:FF:FF:FF:FF

◆ PBX Version

Indicates the software version of the PBX (reference only).

Value Range

0000.00000 - 9999.99999

◆ Data Version

Indicates the version number of the data (reference only).

Value Range

0000.0000 - 9999.9999

◆ SRAM Version

Indicates the version number of the SRAM (reference only).

Value Range

000 - 999

◆ System Up Time

Indicates the system up time (reference only).

Value Range

Days, Hours and Minutes

◆ Storage Memory Size

Indicates the size of the installed storage memory card (reference only).

Value Range

Card Size

◆ Area ID for logical partition

Specifies the area ID for the Logical Partitioning feature.

Value Range

1 - 16

PC Programming Manual References

7.3.5 Utility—Log—Call Control Log—Option 9—◆ Built-in Communication Assistant
10.9 PBX Configuration—[2-9] System—System Options—Option 2—◆ Applying logical partitioning

◆ P2P Group

Specifies the peer-to-peer group of the site.

Value Range

1–32

Feature Guide References

5.2.3 Peer-to-Peer (P2P) Connection

◆ P2P Group Name

Indicates the selected peer-to-peer group's name (reference only).

Value Range

P2P Group Name

Feature Guide References

5.2.3 Peer-to-Peer (P2P) Connection

◆ IP Terminal Registration Mode

Specifies the IP terminal registration mode for registering IP telephones to the PBX.

Value Range

Manual, Full Automatic, Extension Input

Installation Manual References

5.4.1 Easy Setup Wizard

VoIP-DSP Options

The settings in this tab relate to IP extensions and IP trunks.

◆ IP Extension Count of BGM

Specifies how many IP-PTs connected to the mother board can send out BGM.

Value Range

0–117

Feature Guide References

2.30.1 Background Music (BGM)

◆ Echo Cancellation Ports

Specifies the number of ports to be used for echo cancellation.

Value Range

0–64

◆ Send Music On Hold to IP trunk (for P2P conversation)

Enables the sending of hold music to an IP trunk during a P2P connection call between an IP extension and IP trunk.

Value Range

Disable, Enable

◆ Jitter Compensation Operation for G.711

Enables the use of a jitter buffer feature for voice communications using the G.711 codec.

Value Range

Disable, Enable

◆ P2P Group Jitter Compensation Operation for G.711 FAX

Enables the use of a jitter buffer feature for fax communications using the G.711 codec.

Value Range

Disable, Enable

◆ Jitter Compensation Operation for G.729A

Enables the use of a jitter buffer feature for communications using the G.729A codec.

Value Range

Disable, Enable

◆ Jitter Buffer Delay Min. for Voice

Specifies the minimum size of the jitter buffer for voice communications.

Value Range

0–200 ms

◆ Jitter Buffer Delay Max. for Voice

Specifies the maximum size of the jitter buffer for voice communications.

Value Range

0–200 ms

◆ Jitter Buffer Delay Init. for Voice

Specifies the initial size of the jitter buffer for voice communications.

Value Range
0–200 ms

◆ Jitter Buffer Adaptation Period for Voice

Specifies the length of time that the jitter buffer is applied for voice communications.

Value Range
1000–65530 ms

◆ Jitter Buffer Delay Min. for FAX

Specifies the minimum size of the jitter buffer for fax communications.

Value Range
0–200 ms

◆ Jitter Buffer Delay Max. for FAX

Specifies the maximum size of the jitter buffer for fax communications.

Value Range
0–200 ms

◆ Jitter Buffer Delay Init. for FAX

Specifies the initial size of the jitter buffer for fax communications.

Value Range
0–200 ms

◆ Jitter Buffer Adaptation Period for FAX

Specifies the length of time that the jitter buffer is applied for fax communications.

Value Range
1000–65530 ms

◆ DTMF Detection Level for G.711A

Specifies the level of DTMF detection for the G.711A codec.

Value Range
-45– -12 dB

◆ DTMF Detection Level for G.711Mu

Specifies the level of DTMF detection for the G.711Mu codec.

Value Range
-39– -6 dB

◆ CNG Signal Effective Detection Width 1 (ON)

Specifies the length of time that the PBX detects the CNG signal.

Value Range

20–5000 ms

◆ CNG Signal Effective Detection Width 2 (OFF)

Specifies the length of time that the PBX waits until another CNG signal is detected.

Value Range

20–5000 ms

◆ CNG Signal Fixation Detection Counter

Specifies the number of times the CNG signal must be detected before the PBX proceeds the fax operation.

Value Range

1–3

◆ CNG Signal Fixation Detection Pattern

Specifies the CNG signal pattern to be detected before the PBX proceeds the fax operation.

Value Range

OFF, ON

◆ CED Signal Fixation Detection Time

Specifies the minimum length of time required for the CED (called station identification) signal to be detected by the PBX.

Value Range

50 × n (n=1–100) ms

◆ CNG Signal Effective Detection Width 1 (ON) - SIP Extension

Specifies the length of time that the PBX detects the CNG signal for SIP extensions.

Value Range

20 × n (n=1–250) ms

◆ CNG Signal Effective Detection Width 2 (OFF) - SIP Extension

Specifies the length of time that the PBX waits until another CNG signal is detected for SIP extensions.

Value Range

20 × n (n=1–250) ms

◆ CNG Signal Fixation Detection Counter - SIP Extension

Specifies the number of times the CNG signal must be detected before the PBX proceeds the fax operation for SIP extensions.

Value Range

1–3

◆ CNG Signal Fixation Detection Pattern - SIP Extension

Specifies the CNG signal pattern to be detected before the PBX proceeds the fax operation for SIP extensions.

Value Range

Off, On

◆ CED Signal Fixation Detection Time - SIP Extension

Specifies the minimum length of time required for the CED (called station identification) signal to be detected by the PBX for SIP extensions.

Value Range

50 × n (n=1–100) ms

◆ T38 FAX Transmit Level (Network to PBX) A-Law

Specifies the transmission level of G3 fax signals after being converted from T.38 protocol packets, when the codec used is G.711A.

Value Range

-13–2 dB

◆ T38 FAX Transmit Level (Network to PBX) Mu-Law

Specifies the transmission level of G3 fax signals after being converted from T.38 protocol packets, when the codec used is G.711Mu.

Value Range

-7–8 dB

◆ T38 FAX Transmit Level A-Law - SIP Extension

Specifies the transmission level of G3 fax signals after being converted from T.38 protocol packets, when the codec used is G.711A for SIP extensions.

Value Range

-13–2 dB

◆ T38 FAX Transmit Level Mu-Law - SIP Extension

Specifies the transmission level of G3 fax signals after being converted from T.38 protocol packets, when the codec used is G.711Mu for SIP extensions.

Value Range

-7–8 dB

Port Number

◆ Voice (RTP) UDP Port No. (Server)

Specifies the UDP port used by the system to transmit and receive RTP (Real-time Transfer Protocol) data. This must be changed if another network application is using the same port.
For voice communications, the system uses 128 contiguous UDP ports, starting from the port number specified here.

Value Range

1024–64000

Feature Guide References

5.2.1 IP Proprietary Telephone (IP-PT)

◆ Voice (RTP) UDP Port No. (IP-PT / SIP-MLT)

Specifies the UDP port used to transmit and receive RTP (Real-time Transfer Protocol) data on the IP-PT side. This must be changed if another network application is using the same port.
For voice communications, an IP-PT uses 128 contiguous UDP ports, starting from the port number specified here.
To change the value displayed here, click **Common Settings** and set the desired value.

Value Range

1024–65535

Feature Guide References

5.2.1 IP Proprietary Telephone (IP-PT)

◆ UDP Port No. for SIP Extension Server

Specifies the UDP port number used for the SIP Extension server.
To change the value displayed here, click **Common Settings** and set the desired value.

Value Range

1024–65535

Feature Guide References

5.2.2 SIP (Session Initiation Protocol) Extension

◆ CWMP (HTTP) Port No. for SIP-MLT

Specifies the HTTP port of the PBX-side ACS for control communication with KX-UT series SIP phones.

Value Range

0–65535 (Setting "0" will close port access for this feature)

Feature Guide References

5.2.2.1 Simple Remote Connection

◆ Data Transmission Protocol (HTTP) Port No. for SIP-MLT

Specifies the HTTP port of the PBX-side ACS for data communication with KX-UT series SIP phones.

Value Range

0–65535 (Setting "0" will close port access for this feature)

Feature Guide References

5.2.2.1 Simple Remote Connection

◆ LOGIN Port Number

Specifies the port number used to login to the PBX via the LAN.

Value Range

1024–65535

◆ CTI Port Number

Specifies the port number used to operate CTI via the LAN. Selecting "0" disables the 3rd Party CTI feature.

Value Range

1024–65535

Feature Guide References

2.26 Computer Telephony Integration (CTI) Features

◆ Built-in Communication Assistant Server

Specifies the port number for the Communication Assistant (CA) application.

Value Range

1024–65535

PC Programming Manual References

12.1.1 PBX Configuration—[4-1-1] Extension—Wired Extension—Extension Settings—Option 9—◆ Built-in Communication Assistant
12.2.1 PBX Configuration—[4-2-1] Extension—Portable Station—Extension Settings—Option 9—◆ Built-in Communication Assistant

LAN Status

◆ LINK for Main Port

Indicates the current connection status of the main port (reference only).

Value Range

1: Disconnect, 0: Connect

Media Relay

◆ Common—NAT - External IP Address

Specifies the NAT device external IP address (common).

Value Range

Blank, 1.0.0.1–223.255.255.254

Feature Guide References

5.2.2.1 Simple Remote Connection

◆ IP Extension—NAT - MGCP Server Port No.

Specifies the outside-facing MGCP port of the PBX-side network gateway for remote connections.

Value Range

1–65535

Feature Guide References

5.2.2.1 Simple Remote Connection

◆ IP Extension—Keep Alive Packet Type

Specifies the type of Keep Alive packets to be sent out for remote connections for IP extensions.

Value Range

Blank UDP, None

Feature Guide References

5.2.2.1 Simple Remote Connection

◆ IP Extension—Keep Alive Packet Sending Interval Time (s)

Specifies the time interval between transmissions of Keep Alive packets.

Value Range

10–60 s

Feature Guide References

5.2.2.1 Simple Remote Connection

◆ SIP Extension / UT Extension—NAT - SIP Proxy Server Port No.

Specifies the outside-facing port of the network gateway connected to the SIP proxy server.

Value Range

1–65535

Feature Guide References

5.2.2.1 Simple Remote Connection

◆ UT Extension—NAT - CWMP Server (HTTP) Port No.

Specifies the outside-facing HTTP port of the PBX-side network gateway for remote connections.

Value Range

1–65535

Feature Guide References

5.2.2.1 Simple Remote Connection

◆ UT Extension—NAT - CWMP Server (HTTP) Port No. for Network Survivability

Specifies the outside-facing HTTP port of the PBX-side network gateway for remote connections. This setting specifies the port number used for the secondary server for network survivability.

Value Range

1–65535

Feature Guide References

5.2.2.1 Simple Remote Connection

◆ UT Extension—NAT - SIP-MLT Data Download Server (HTTP) Port No.

Specifies the outside-facing HTTP port of the PBX-side network gateway for remote connections used for downloading data to KX-UT series SIP phones.

Value Range

1–65535

Feature Guide References

5.2.2.1 Simple Remote Connection

◆ UT Extension—NAT - NTP Server Port No.

Specifies the outside-facing port of the network gateway connected to the NTP server.

Value Range

1–65535

Feature Guide References

5.2.2.1 Simple Remote Connection

◆ UT Extension—Keep Alive Packet Type

Specifies the type of Keep Alive packets to be sent out for remote connections.

Value Range

Register, Blank UDP, None

Feature Guide References

5.2.2.1 Simple Remote Connection

◆ UT Extension—Keep Alive Packet Sending Interval Time (s)

Specifies the time interval between transmissions of Keep Alive packets.

Value Range

10–60 s

Feature Guide References

5.2.2.1 Simple Remote Connection

◆ UT Extension—SIP Register Expire Time (s)

Specifies the length of time that will elapse before the current registration expires.

Value Range

10–3600 s

Feature Guide References

5.2.2.1 Simple Remote Connection

◆ UT Extension—PERIODIC Ability

Specifies whether alive monitoring is performed for connected remote extensions.

Value Range

Disable, Enable

Feature Guide References

5.2.2.1 Simple Remote Connection

◆ UT Extension—PERIODIC Packet Sending Interval Time (s)

Specifies the polling interval for alive monitoring when **PERIODIC Ability** is set to **Enable**.

Value Range

30–3600 s

Feature Guide References

5.2.2.1 Simple Remote Connection

◆ Option—NAT - RTP IP Address

Specifies the RTP server's IP address. If using a separate IP address from **Common—NAT - External IP Address**, configure this setting.

Value Range

Blank, 1.0.0.1–223.255.255.254

Feature Guide References

5.2.2.1 Simple Remote Connection

◆ Option—NAT - SIP Proxy Server IP Address

Specifies the outside-facing IP address or host name of the network gateway connected to the SIP proxy server. If using a separate IP address from **Common—NAT - External IP Address**, configure this setting.

Value Range

Blank, 1.0.0.1–223.255.255.254

Feature Guide References

5.2.2.1 Simple Remote Connection

◆ Option—NAT - CWMP Server IP Address

Specifies the outside-facing IP address of the PBX-side network gateway for remote connections. If using a separate IP address from **Common—NAT - External IP Address**, configure this setting.

Value Range

Blank, 1.0.0.1–223.255.255.254

Feature Guide References

5.2.2.1 Simple Remote Connection

◆ Option—NAT - CWMP Server IP Address for Network Survivability

Specifies the outside-facing IP address of the PBX-side network gateway for remote connections. This setting specifies the port number used for the secondary server for network survivability.

Value Range

Blank, 1.0.0.1–223.255.255.254

Feature Guide References

5.2.2.1 Simple Remote Connection

◆ Option—NAT - NTP Server IP Address

Specifies the outside-facing IP address of the network gateway connected to the NTP server. If using a separate IP address from **Common—NAT - External IP Address**, configure this setting.

Value Range

Blank, 1.0.0.1–223.255.255.254

Feature Guide References

5.2.2.1 Simple Remote Connection

SIP Extension

◆ SIP Location Hold Time Max.

Specifies the maximum length of time that the PBX holds information on the location of SIP Extensions.

Value Range

10–3600 s

Feature Guide References

5.2.2 SIP (Session Initiation Protocol) Extension

◆ SIP Location Hold Time Min.

Specifies the minimum length of time that the PBX holds information on the location of SIP Extensions.

Value Range

10–3600 s

Feature Guide References

5.2.2 SIP (Session Initiation Protocol) Extension

◆ SIP Location Hold Time Interval

Specifies the interval time that the PBX waits before starting to hold information on location of SIP Extensions.

Value Range

1–10 s

Feature Guide References

5.2.2 SIP (Session Initiation Protocol) Extension

◆ SIP Session Timer Min.

Specifies the minimum length of time that the PBX waits before disconnecting SIP sessions when no communication is detected.

Value Range

90–3600 s

Feature Guide References

5.2.2 SIP (Session Initiation Protocol) Extension

◆ Setting parameters assigned to Remote SIP-MLT—NAT - CWMP Server IP Address

Specifies the outside-facing IP address or host name of the PBX-side network gateway for remote connections.

Value Range

1.0.0.0–223.255.255.255 (IP address), Max. 100 characters (host name)

Feature Guide References

5.2.2.1 Simple Remote Connection

◆ Setting parameters assigned to Remote SIP-MLT—NAT - CWMP Server (HTTP) Port No.

Specifies the outside-facing HTTP port of the PBX-side network gateway for remote connections.

Value Range

1–65535

Feature Guide References

5.2.2.1 Simple Remote Connection

◆ Setting parameters assigned to Remote SIP-MLT—NAT - SIP-MLT Data Download Server (HTTP) Port No.

Specifies the outside-facing HTTP port of the PBX-side network gateway for remote connections used for downloading data to KX-UT series SIP phones.

Value Range

1–65535

Feature Guide References

5.2.2.1 Simple Remote Connection

◆ Setting parameters assigned to Remote SIP-MLT—NAT - SIP Proxy Server IP Address

Specifies the outside-facing IP address or host name of the network gateway connected to the SIP proxy server.

Value Range

1.0.0.0–223.255.255.255 (IP address), Max. 100 characters (host name)

Feature Guide References

5.2.2.1 Simple Remote Connection

◆ Setting parameters assigned to Remote SIP-MLT—NAT - SIP Proxy Server Port No.

Specifies the outside-facing port of the network gateway connected to the SIP proxy server.

Value Range

1–65535

Feature Guide References

5.2.2.1 Simple Remote Connection

◆ Setting parameters assigned to Remote SIP-MLT—NAT - NTP Server IP Address

Specifies the outside-facing IP address or host name of the network gateway connected to the NTP server.

Value Range

1.0.0.0–223.255.255.255 (IP address), Max. 100 characters (host name)

Feature Guide References

5.2.2.1 Simple Remote Connection

◆ Setting parameters assigned to Remote SIP-MLT—NAT - NTP Server Port No.

Specifies the outside-facing port of the network gateway connected to the NTP server.

Value Range

1–65535

Feature Guide References

5.2.2.1 Simple Remote Connection

◆ Setting parameters assigned to Remote SIP-MLT—NAT - Keep Alive Packet Type

Specifies the type of Keep Alive packets to be sent out for remote connections.

Value Range

Register, Blank UDP, None

Feature Guide References

5.2.2.1 Simple Remote Connection

◆ Setting parameters assigned to Remote SIP-MLT—NAT - Keep Alive Packet Sending Interval Time (s)

Specifies the time interval between transmissions of the Keep Alive packet.

Note

- This interval must be shorter than the NAT binding time of the router. The default value is appropriate in most cases.
- This setting is available only when **NAT - Keep Alive Packet Type** is set to "Blank UDP".

Value Range

10–60 s

Feature Guide References

5.2.2.1 Simple Remote Connection

◆ Setting parameters assigned to Remote SIP-MLT—NAT - SIP Register Expire Time (s)

Specifies the length of time that will elapse before the current registration expires.

Note

This setting is available only when **NAT - Keep Alive Packet Type** is set to "Register".

Value Range

10–3600 s

Feature Guide References

5.2.2.1 Simple Remote Connection

◆ Setting parameters for Networking Survivability, assigned to Remote SIP-MLT—NAT - CWMP Server IP Address

Specifies the outside-facing IP address or host name of the PBX-side network gateway for remote connections that is used when the gateway specified in **Setting parameters assigned to Remote SIP-MLT** is not available.

Value Range

1.0.0.0–223.255.255.255 (IP address), Max. 100 characters (host name)

Feature Guide References

5.2.2.1 Simple Remote Connection

◆ Setting parameters for Networking Survivability, assigned to Remote SIP-MLT—NAT - CWMP Server (HTTP) Port No.

Specifies the outside-facing HTTP port of the PBX-side network gateway for remote connections that is used when the gateway specified in **Setting parameters assigned to Remote SIP-MLT** is not available.

Value Range

1–65535

Feature Guide References

5.2.2.1 Simple Remote Connection

◆ Control Condition of Remote SIP-MLT—PERIODIC Ability

Specifies whether alive monitoring is performed for connected remote extensions.

Value Range

Enable, Disable

Feature Guide References

5.2.2.1 Simple Remote Connection

◆ Control Condition of Remote SIP-MLT—PERIODIC Packet Sending Interval Time (s)

Specifies the polling interval for alive monitoring when **PERIODIC Ability** is set to "Enable".

Value Range

30–3600 s

Feature Guide References

5.2.2.1 Simple Remote Connection

Echo Cancellation

The settings in this tab are for non-IP calls.

◆ Echo Cancellation Ability

Specifies the echo canceller ability time.

Value Range

OFF, 64 ms, 128 ms

◆ DSP Digital Gain (Down)

Specifies the DSP Digital Gain for the down voice path.

Value Range

-14–6 dB

◆ DSP Digital Gain (Up)

Specifies the DSP Digital Gain for the up voice path.

Value Range

-14–6 dB

◆ EC Gain

Specifies the Echo Canceller Gain.

Value Range

-14–6 dB

◆ NLP Setting

Specifies the NLP (Non-Linear Processor) setting to control echo sound quality.

Value Range

Disable, Weak, Normal, Strong

DSP Conference

◆ DSP Conference Priority

Specifies the Conference Priority (the conference resource you want to use).

Value Range

Preferential: Default conference resource
Alternative: Conference resource on DSP card

◆ DSP Digital Gain (Up) on V-IPEXT side for conference

Specifies the DSP Digital Gain for the up voice path for conference calls using an extension of a V-IPEXT card.

Value Range

-14–6 dB

◆ DSP Digital Gain (Up) on V-SIPEXT side for conference

Specifies the DSP Digital Gain for the up voice path for conference calls using an extension of a V-SIPEXT card.

Value Range

-14–6 dB

◆ DSP Digital Gain (Up) on V-UTEXT side for conference

Specifies the DSP Digital Gain for the up voice path for conference calls using an extension of a V-UTEXT card.

Value Range

-14–6 dB

◆ DSP Digital Gain (Up) on Multisite GW side for conference

Specifies the DSP Digital Gain for the up voice path for conference calls using a gateway between sites.

Value Range

-14–6 dB

◆ Echo Cancellation Ability on TDM side for conference

Specifies the echo canceller ability time for conferencing using TDM circuit mode communication.

Value Range

OFF, 64 ms, 128 ms

◆ DSP Digital Gain (Up) on TDM side for conference

Specifies the DSP Digital Gain for the up voice path for conferencing using TDM circuit mode communication.

Value Range

-14–6 dB

◆ DSP Digital Gain (Down) on TDM side for conference

Specifies the DSP Digital Gain for the down voice path for conferencing using TDM circuit mode communication.

Value Range

-14–6 dB

◆ EC Gain on TDM side for conference

Specifies the error correction gain for conferencing using TDM circuit mode communication.

Value Range

-14–6 dB

◆ NLP Setting on TDM side for conference

Specifies the NLP (Non-Linear Processor) setting for conferencing using TDM circuit mode communication.

Value Range

Disable, Weak, Normal, Strong

9.2.3 PBX Configuration—[1-1] Configuration—Slot—System Property—Slot Summary

Summary information is displayed for all cards installed in the PBX.
Click one of the following tabs to view a summary of the shelf in the PBX:

- **Physical Shelf**: View the physical card shelf.
- **Virtual Shelf**: View the virtual card shelf.

Physical Shelf

The **Shelf** and **Slot** for each item are displayed for your reference. For details, see **Common Programming Reference Items** in **9.1 PBX Configuration—[1-1] Configuration—Slot**.

◆ Card Type

Indicates the service cards installed in the slots of the physical shelf (reference only).

Value Range

Card Type:

LCOT6: 6-Port Analogue Trunk Card
DLC2: 2-Port Digital Extension Card
MCSLC16: 16-Port Single Line Telephone Extension Card
PRI30: PRI30 Card
E1: E1 Trunk Card
DPH2: 2-Port Doorphone Card
DHLC4: 4-Port Digital Hybrid Extension Card
DLC8: 8-Port Digital Extension Card
DLC16: 16-Port Digital Extension Card
MCSLC8: 8-Port Single Line Telephone Extension Card
EXP-M: Expansion Master Card for connecting Expansion Units.

PC Programming Manual References

9.1 PBX Configuration—[1-1] Configuration—Slot
9.21 PBX Configuration—[1-1] Configuration—Slot—Extension—Card Property
9.23 PBX Configuration—[1-1] Configuration—Slot—Card Property - LCO type
9.25 PBX Configuration—[1-1] Configuration—Slot—Card Property - PRI type

◆ Status

Indicates the card status (reference only).

Value Range

INS: The card is in service.
OUS: The card is out of service.
Fault: The card is not communicating with the network.
Pre-Install: A card has been added to the slot.
IDLE: No card is installed in the slot.

PC Programming Manual References

9.1 PBX Configuration—[1-1] Configuration—Slot

◆ Version

Indicates the software version of the installed card (reference only).

Value Range

Version number

PC Programming Manual References

9.1 PBX Configuration—[1-1] Configuration—Slot

Virtual Shelf

The **Shelf** and **Slot** for each item are displayed for your reference. For details, see **Common Programming Reference Items** in **9.1 PBX Configuration—[1-1] Configuration—Slot**.

◆ Slot Type

Indicates the type of card slot (reference only).

Value Range

Trunk, Extension

PC Programming Manual References

9.1 PBX Configuration—[1-1] Configuration—Slot

◆ Card Type

Indicates the type of virtual card installed (reference only).

Value Range

V-SIPGW4, V-IPGW4, V-IPEXT8, V-SIPEXT8, V-IPCS4, V-UTEXT8

PC Programming Manual References

9.1 PBX Configuration—[1-1] Configuration—Slot

◆ Status

Indicates the card status (reference only).

Value Range

INS: The card is in service.
OUS: The card is out of service.
Fault: The card is not communicating with the network.
Pre-Install: A card has been added to the slot.

PC Programming Manual References

9.1 PBX Configuration—[1-1] Configuration—Slot

9.2.4 PBX Configuration—[1-1] Configuration—Slot—System Property—NSVM

Settings related to audio quality and sound detection for the PBX site can be specified.

◆ Echo Cancellation Ability

Specifies the echo canceller ability time.

Value Range

OFF, 64 ms, 128 ms

◆ DSP Digital Gain (Down)

Specifies the DSP Digital Gain for the down voice path.

Value Range

-14–6 dB

◆ DSP Digital Gain (Up)

Specifies the DSP Digital Gain for the up voice path.

Value Range

-14–6 dB

◆ EC Gain

Specifies the Echo Canceller Gain.

Value Range

-14–6 dB

◆ NLP Setting

Specifies the NLP (Non-Linear Processor) setting to control echo sound quality.

Value Range

Disable, Weak, Normal, Strong

◆ AGC enable for Tx signal

Specifies whether AGC is activated or not for the Transmit signal.

Value Range

Disable, Enable

◆ AGC enable for Rx signal

Specifies whether AGC is activated or not for the Receive signal.

Value Range
Disable, Enable

◆ AGC reference level for TX signal

Specifies the AGC reference level for the Transmit signal.

Value Range
-50 dBm 0 - 0 dBm 0

◆ AGC reference level for RX signal

Specifies the AGC reference level for the Receive signal.

Value Range
-50 dBm 0 - 0 dBm 0

◆ The maximum allowable AGC gain for TX signal

Specifies the maximum allowable AGC gain for the Transmit signal.

Value Range
0 dB - 40 dB

◆ The minimum allowable AGC gain for TX signal

Specifies the minimum allowable AGC gain for the Transmit signal.

Value Range
-40 dB - 0 dB

◆ The maximum allowable AGC gain for RX signal

Specifies the maximum allowable AGC gain for the Receive signal.

Value Range
0 dB - 40 dB

◆ The minimum allowable AGC gain for RX signal

Specifies the minimum allowable AGC gain for the Receive signal.

Value Range
-40 dB - 0 dB

◆ SNS On/Off for PCM-to-Packet path

Specifies whether SNS is on or off for the PCM-to-Packet path.

Value Range
Off, On

◆ SNS On/Off for Packet-to-PCM path

Specifies whether SNS is on or off for the Packet-to-PCM path.

Value Range

Off, On

◆ SNS level for Packet-to-PCM path

Specifies the SNS level for the Packet-to-PCM path.

Value Range

2 dB - 20 dB

◆ SNS level for PCM-to-Packet path

Specifies the SNS level for the PCM-to-Packet path.

Value Range

2 dB - 20 dB

◆ FAX Detection Ability

Enables the use of the FAX Detection Ability feature. Since fax signals using a codec other than G.711 cannot be received accurately at the destination, this feature automatically switches the codec to G.711 to enable end-to-end fax signal relay over the network.

Value Range

Disable, Enable

◆ CNG Signal Effective Detection Width 1 (ON)

Specifies the length of time that the PBX detects the CNG signal.

Value Range

20–5000 ms

◆ CNG Signal Effective Detection Width 2 (OFF)

Specifies the length of time that the PBX waits until another CNG signal is detected.

Value Range

20–5000 ms

◆ CNG Signal Fixation Detection Counter

Specifies the number of times the CNG signal must be detected before the PBX proceeds the fax operation.

Value Range

1–3

◆ CNG Signal Fixation Detection Pattern

Specifies the CNG signal pattern to be detected before the PBX proceeds the fax operation.

Value Range

OFF, ON

◆ Silence Detection Tx Threshold

Specifies the silence detection transmitting threshold.

Value Range

-38 dBm 0 - -20 dBm 0

◆ Silence Detection Rx Threshold

Specifies the silence detection receiving threshold.

Value Range

-38 dBm 0 - -20 dBm 0

◆ Maximum Silence Time

Specifies the length of time of silence that the PBX will detect as the end of a call.

Value Range

1000–60000 (ms)

◆ Maximum Continuous Tone Time

Specifies the length of time of a continuous tone that the PBX will detect as the end of a call.

Value Range

1000–60000 (ms)

◆ Unique Cyclic Tone Detection

Specifies whether the system will detect the end of a call when there is a unique cyclic tone.

Value Range

Disable, Enable

◆ Maximum Cyclic Tone Time

Specifies the length of time of a continuing cyclic tone that the PBX will detect as the end of a call.

Value Range

1000–60000 (ms)

9.3 PBX Configuration—[1-1] Configuration—Slot—Activation Key Status

Refreshes and displays information about activation keys provided by any activation key files in the System Memory and by pre-installed activation keys on the mother board. To access this screen, click the **Activation Key** button on the **Configuration—Slot** main screen.
It is possible to programme how the number of available IP Trunk channels is to be divided for H.323 and SIP trunks. In **Number of activated IP-GW**, type the number of IP Trunk channels to be used for H.323 trunks. The remaining number of IP Trunk channels will be used for SIP trunks.

Note

If you have changed the value for **Number of activated IP-GW**, you must click **Execute** to restart the V-IPGW4 cards for the change to take effect.

Similarly, you can programme how many IP softphones can be used through the IP Softphone/IP Proprietary Telephone activation key. In **Number of activated IP-Softphone**, type the number of IP softphones to be used through the IP Softphone/IP Proprietary Telephone activation key, and then click **OK**. The remainder is the number of IP-PTs that can be used through the IP Softphone/IP Proprietary Telephone activation key. By default, only IP softphones can be used.
You can click the **Activation Key Installation** link to access the Activation Key Installation screen (see **7.6 Utility—Activation Key Installation**) for installing activation keys.

Trial Activation Keys

The PBX includes free trials for some PBX features that normally require activation keys. The trials have a 60-day limit. To begin using the free trials:

1. Click **Activate Pre-installed Activation keys**. A list of trial activation keys is displayed in a new window.
2. Select the check boxes next to the trial activation keys you want to activate.
3. Click **OK**.

The trial period for the selected trial activation keys will begin.

Trial activation keys:

- Two-way Recording Control
- Message Backup
- UM/E-mail (128 users)
- Two-Way Recording (30 users)
- Mobile Extension (30 users)
- 3rd Party CTI Link Control
- Call Centre Feature Enhancement

◆ MPR-ID

Indicates the ID number of the mother board (reference only).

Value Range

ID number of the mother board

◆ Activated Feature

Indicates the type of activation keys (reference only).
Note that the types of activation keys are subject to change without notice.

Value Range

IP Trunk (ch): IP Trunk Activation Key

IP Proprietary Telephone/IP Softphone (ch): IP Softphone/IP Proprietary Telephone Activation Key
IP Proprietary Telephone (ch): IP Proprietary Telephone Activation Key
SIP Extension (ch): SIP Extension Activation Key
QSIG Network: Activation key for QSIG network
Two-way Recording Control: Activation key for two-way recording control
Message Backup: Activation key for message backup
UM Port (ch): Activation key for Unified Messaging ports
UM/E-mail (user): Activation key for Unified Messaging Email Client
Two-way Recording (user): Activation key for two-way recording
CTI interface: Activation key for 3rd Party CTI link
Mobile Extension (user): Activation key for Mobile Extension users
Call Centre Feature Enhancement: Activation Key for Call Center Feature
VoIP/UM Feature: Activation Key for VoIP/UM Feature

◆ Pre-installed

Indicates the number of channels provided by the mother board (reference only).

Value Range

Not applicable.

◆ Activation Key

Indicates the number of channels provided by activation key files in the System Memory (reference only).

Value Range

Not applicable.

◆ Features in total

Indicates the total number of channels provided by the mother board and activation key files in the System Memory (reference only).

Value Range

Not applicable.

9.4 PBX Configuration—[1-1] Configuration—Slot—VoIP Property

9.4.1 PBX Configuration—[1-1] Configuration—Slot—VoIP Property—VoIP (Ext) Setting

Allows you to install or remove IP extension cards by entering the number of IP extensions (IP-PT, UT/UDT or SIP extension) and to set IP Terminal Registration Mode.
When you place the mouse cursor over the **VoIP Property** button on the **Slot** screen, click the **VoIP(Ext) Setting** button to open the **VoIP(Ext) Setting** screen.

◆ Number of IP Extensions—Number of IP Extensions (Max.32) - IP-PT(NT)

Specifies the required number of IP-PT(NT) extensions to install or remove V-IPEXT8 cards.

Value Range

0-32

◆ Number of IP Extensions—Number of IP Extensions (Max.32)—UT/UDT

Specifies the required number of UT/UDT extensions to install or remove V-UTEXT8 cards.

Value Range

0-32

◆ Number of IP Extensions—Number of IP Extensions (Max.32)—SIP-Phone

Specifies the required number of SIP extensions to install or remove V-SIPEXT8 cards.

Value Range

0-32

◆ Number of IP Extensions—Number of IP Extensions (Max.32)—Total

Indicates the total number of required IP Extensions (IP-PT(NT), UT/UDT, SIP Phone) (reference only).

Value Range

0-32

◆ Number of IP Extensions—Number of cards (Max.4)—V-IPEXT8

Indicates the number of installed V-IPEXT8 cards (reference only).

Value Range

0-4

◆ Number of IP Extensions—Number of cards (Max.4)—V-UTEXT8

Indicates the number of installed V-UTEXT8 cards (reference only).

Value Range

0-4

◆ Number of IP Extensions—Number of cards (Max.4)—V-SIPEXT8

Indicates the number of installed V-SIPEXT8 cards (reference only).

Value Range

0-4

◆ Number of IP Extensions—Number of cards (Max.4) - Total

Indicates the number of total installed IP Extension cards (reference only).

Value Range

0-4

◆ IP Terminal Registration Mode

Specifies the IP Terminal registration mode for registering IP telephones to the PBX.

Value Range

Manual, Full Automatic, Extension Number Input

9.4.2 PBX Configuration—[1-1] Configuration—Slot—VoIP Property—VoIP (Trunk) Setting

Allows you to add new SIP trunk accounts by entering the number of SIP trunk port and some SIP trunk settings. When you place the mouse cursor over the **VoIP Property** button on the **Slot** screen, click the **VoIP (Trunk) Setting** button to open the **VoIP (Trunk) Setting** screen.

◆ Number of IP Trunks—SIP Trunk (Available)

Displays the number of SIP trunks that can be assigned.

Value Range

0-16

◆ Number of IP Trunks—Additional Number of SIP Trunks

Specifies the number of SIP Trunk to install V-SIPGW4 cards.

Value Range

0-16

◆ Account Setting—User Name (64 characters)

Specifies the user name (SIP Account) provided by the SIP provider.

Value Range

Max. 64 characters

◆ Account Setting—Authentication ID (64 characters)

Specifies the authentication ID required for registration with the SIP server.

Value Range

Max. 64 characters

◆ Account Setting—Authentication Password (32 characters)

Specifies the authentication password used for registration with the SIP provider.

Value Range

Max. 32 characters

◆ Account Setting—SIP Server Name / Outbound Proxy Name (Max.100 characters)

Specifies the domain name of the SIP proxy server.

Note

Specify the domain name of the outbound proxy server, if provided by the SIP provider.

Value Range

Max. 100 characters

◆ Account Setting—SIP Server IP Address

Specifies the IP address of the SIP proxy server. This setting is compulsory when not using the DNS server.

Note

Specify the IP address of the outbound proxy server, if provided by the SIP provider.

Value Range

1.0.0.0–223.255.255.255

◆ Account Setting—SIP Service Domain / Proxy Domain (Max.100 characters)

Specifies the domain name provided by the SIP provider.

Value Range

Max. 100 characters

◆ Property Setting—Select Service Provider

Select the SIP service provider after importing SIP service provider file.

Value Range

Max. 100 characters

◆ Property Setting—Register Ability

Specifies whether to send the REGISTER message to the SIP server.

Value Range

Disable, Enable

◆ Property Setting—Session Expire Timer (s)

Specifies the length of time that the PBX waits before terminating SIP sessions when no reply to the repeated requests is received.

Value Range

90–3600 s

◆ Property Setting—From Header - user Part

Specifies the value to be stored in the username part of the SIP-URI of the From header.

Value Range

User Name, Authentication ID, PBX-CLIP

◆ Property Setting—Header Type

Specifies the header of the SIP message in which the caller information is stored.

Value Range

From Header, P-Preferred-Identity Header

◆ Property Setting—Anonymous format in "From" header

Specifies the format of the "From" header when not sending caller ID.

Value Range

Display name and SIP-URI, Display name only

Note

If **"Display name and SIP-URI"** is selected, the display name part and the SIP-URI of the "From" header will be displayed as **"Anonymous"**.
[Example]
From: **Anonymous** <sip:**anonymous@anonymous.invalid**>
If **"Display name only"** is selected, only the display name part of the "From" header will be displayed as **"Anonymous"**.
[Example]
From: **Anonymous** <sip:1234@example.com>

◆ Property Setting—FAX Sending Method

Specifies the method of transporting the fax signal.

Value Range

G.711 Inband, T.38

9.5 PBX Configuration—[1-1] Configuration—Slot—UM Card Property

The properties of the Unified Messaging (UM) system can be specified.
Place the mouse cursor over the **UM Property** button on the **Slot** screen, and click the **Card Property** button to open the **UM Card Property** screen.

Main

◆ Echo Cancellation Ability

Specifies the echo canceller ability time.

Value Range

OFF, 64 ms, 128 ms

◆ DSP Digital Gain (Down)

Specifies the DSP Digital Gain for the down voice path.

Value Range

-14–6 dB

◆ DSP Digital Gain (Up)

Specifies the DSP Digital Gain for the up voice path.

Value Range

-14–6 dB

◆ EC Gain

Specifies the Echo Canceller Gain.

Value Range

-14–6 dB

◆ NLP Setting

Specifies the NLP (Non-Linear Processor) setting to control echo sound quality.

Value Range

Disable, Weak, Normal, Strong

◆ FAX Detection Ability

Enables the use of the FAX Detection Ability feature. Since fax signals using a codec other than G.711 cannot be received accurately at the destination, this feature automatically switches the codec to G.711 to enable end-to-end fax signal relay over the network.

Value Range

Disable, Enable

◆ CNG Signal Effective Detection Width 1 (ON)

Specifies the length of time that the PBX detects the CNG signal.

Value Range

20–5000 ms

◆ CNG Signal Effective Detection Width 2 (OFF)

Specifies the length of time that the PBX waits until another CNG signal is detected.

Value Range

20–5000 ms

◆ CNG Signal Fixation Detection Counter

Specifies the number of times the CNG signal must be detected before the PBX proceeds the fax operation.

Value Range

1–3

◆ CNG Signal Fixation Detection Pattern

Specifies whether or not the Unified Messaging system will respond to CNG signals.

Value Range

OFF, ON

9.6 PBX Configuration—[1-1] Configuration—Slot—UM Port Property

The properties of the Unified Messaging (UM) system's ports can be specified.
Place the mouse cursor over the **UM Property** button on the **Slot** screen, and click the **Port Property** button to open the **UM Port Property** screen.
The **Port** for each item is displayed for your reference. For details, see **Common Programming Reference Items** in **9.1 PBX Configuration—[1-1] Configuration—Slot**

◆ Extension Number

Specifies the extension number of the port.

Value Range

Max. 5 digits (consisting of 0–9)

◆ Connection

Indicates the port status. To change the status of the port, click the desired cell in the column, and then select **INS** or **OUS** for the port.
This option is only available in On-line mode.

Value Range

INS: The port is in service.
OUS: The port is out of service.
Fault: The port is not communicating with the network.

PC Programming Manual References

9.1 PBX Configuration—[1-1] Configuration—Slot–To change the status (INS/OUS) of a card (On-line mode only)

9.7 PBX Configuration—[1-1] Configuration—Slot—Port Property—Port Type View

Displays the number of connected telephones, devices, and Cell Stations (CSs). This screen can be accessed from the Port Property screen of any extension cards in use in the PBX system, including extension cards of Expansion Units. For information about Expansion Units, see **9.32 PBX Configuration—[1-1] Configuration—Slot—Expansion Unit1/Expansion Unit2/Expansion Unit3**.
This screen can be accessed only in On-line mode.

◆ Type

Indicates the types of telephones, devices, or CSs (reference only).

Value Range

IP-EXT, SIP-MLT, SIP, DPT (40V) (KX-DT300 series/KX-DT500 series/KX-T7600 series DPTs), DPT (15V) (DPTs other than KX-DT300 series/KX-DT500 series/KX-T7600 series), APT, SLT, DSS Console, UM, VM, Other, CS, High-density CS, IP-CS, SIP-CS, S-PS

PC Programming Manual References

9.1 PBX Configuration—[1-1] Configuration—Slot

◆ Total Count

Indicates the total number of each type of telephone, device, and CS connected to the PBX (reference only). CSs are counted on the basis of the number of ports in service plus the number of extension ports to which CSs are connected.

Value Range

Not applicable.

PC Programming Manual References

9.1 PBX Configuration—[1-1] Configuration—Slot

9.8 PBX Configuration—[1-1] Configuration—Slot—V-SIPGW—Shelf Property

Common settings for all of the V-SIPGW cards installed in the Virtual Shelf can be programmed.

Icon Description

In this section, the following icons show the different parameter type.

Icon	Description for Parameter Type
◎	Manual programming is compulsory under certain conditions.
◆	Manual programming is optional.

Main

◆ SIP Client Port Number

Specifies the port number of the PBX used for communications with the SIP server.

Value Range

1024–65535

◆ NAT Traversal

Specifies the NAT traversal method.

– STUN: A STUN Server, used alongside the SIP Server, finds out the global IP address of the router with NAT enabled.
– Fixed IP Addr.: The global IP address of the router with NAT enabled is fixed.

Note

Manual programming is optional except when programming is required depending on the network conditions.

Value Range

Off, Fixed IP Addr., STUN

◆ NAT - Voice (RTP) UDP Port No.

Specifies the starting port number of the dynamic ports used for NAT Traversal.

Value Range

1024–65535

◎ NAT - Keep Alive Packet Sending Ability

Specifies whether to send Keep Alive packets in order to maintain the NAT binding information. This setting may be compulsory depending on the network conditions.

Value Range

Disable, Enable

◆ NAT - Keep Alive Packet Type

Specifies the type of Keep Alive packets to be sent out.

Value Range

Blank UDP, None

◆ NAT - Keep Alive Packet Sending Interval

Specifies the interval time until the next Keep Alive packet is sent.

Note

This interval must be shorter than the NAT binding time of the router. The default value is appropriate in most cases.

Value Range

1–60 s

NAT - Fixed Global IP Address

Specifies the global IP address of the router with NAT enabled. This setting is compulsory if **Fixed IP Addr.** is selected in **NAT Traversal**.

Value Range

1.0.0.0–223.255.255.255

◆ STUN Ability

Specifies whether to open a protocol port of the STUN server to enable STUN feature.

Value Range

Disable, Enable

◆ STUN Client Port Number

Specifies the port number of the PBX used for communications with the STUN server.

Value Range

1–65535

◆ STUN External Address Detection Retry Counter

Specifies the number of times that a query is retried when no response is received from the STUN server.

Value Range

0–8

◆ STUN Resending Interval

Specifies the length of time until a query is retried when no response is received from the STUN server.

Value Range

0–1600 ms

◆ SIP Called Party Number Check Ability

Specifies whether to receive a SIP trunk call when receiving the INVITE message with an incorrect target SIP-URI. The setting specified here is also applied when the request header is blank or contains characters that cannot be modified to a receivable number.

Value Range

Disable (High->Low), Disable (Low->High), Enable

◆ Symmetric Response Routing Ability

Enables this feature to request that the SIP server sends the response back to the source IP address and port from which the request originated.

Value Range

Disable, Enable

◆ 100rel Ability

Specifies whether to add the option tag 100rel to the header field of the INVITE message.

Value Range

Disable: This feature is not activated.
Enable (Active): Activates this feature only if the other device supports the feature.
Enable (Passive): Activates this feature only when requested by the other device.

◆ Ringback Tone to Outside Caller

Enables the PBX to send a ringback tone to an outside caller when the network cannot send the tone.

Value Range

Disable, Enable

◆ SIP QoS Ability

Specifies the type of value to be stored in the ToS field in the IP header.

Value Range

ToS, DSCP, HEX

◆ SIP QoS-ToS Priority

Specifies the priority level in the ToS field when "ToS" is selected in ◆ **SIP QoS Ability**.

Value Range

0–7

◆ SIP QoS-ToS Type

Specifies the ToS type in the ToS field when "ToS" is selected in ◆ **SIP QoS Ability**.

Value Range

Normal, Monetary Cost, Reliability, Throughput, Delay

◆ SIP Called Party Number Search Mode

Specifies the search mode for the notified SIP Called Party Number information.

Value Range

Mode 1: Searches SIP accounts only.
Mode 2: Searches SIP accounts, then DDI/DID numbers. Searches the SIP trunks of the tenant of the search-matched DDI/DID number, in ascending order (Low → High).
Mode 3: Searches SIP accounts, then DDI/DID numbers. Searches the SIP trunks of the tenant of the search-matched DDI/DID number, in descending order (High → Low).

Timer

◆ SIP T1

Specifies the retransmission interval time for INVITE requests and responses.

Value Range

5–255 × 100 ms

◆ SIP T2

Specifies the retransmission interval time for INVITE responses and non-INVITE requests.

Value Range

40–255 × 100 ms

9.9 PBX Configuration—[1-1] Configuration—Slot—V-SIPGW—Card Property

Common card settings for all of the V-SIPGW cards installed in the Virtual Shelf can be programmed.

◆ DNS SRV Record Resolve Ability

Specifies whether to request that the DNS server translates domain names into IP addresses using the DNS SRV record. Click **Common Settings** to change this setting.

Value Range

Disable, Enable

9.10 PBX Configuration—[1-1] Configuration—Slot—V-SIPGW—Port Property

Programming Port Properties

Some of the parameters can be automatically programmed by selecting the desired SIP provider for each virtual SIP gateway port.

Icon Description

In this section, the following icons show the different parameter type.

Icon	Description for Parameter Type
★	Programmed automatically by selecting the desired SIP provider in **Select Provider**.
◎	Manual programming is compulsory.
(◎)	Manual programming is compulsory under certain conditions.
◆	Manual programming is optional.

Automatic Programming

Some of the parameters on this screen can be automatically programmed by selecting the desired SIP provider for each virtual SIP gateway port. A maximum of 32 SIP providers can be programmed, and a different SIP provider can be assigned to each virtual SIP gateway port.
Follow the steps below to configure a SIP provider.

1. Click **Select Provider**.
   A dialogue box will appear. Available virtual SIP gateway port numbers are displayed in the list.
2. From the **Provider** menu, select the desired SIP provider.
3. Highlight the desired port numbers or click **Select All** to select all the virtual SIP gateway port numbers to be assigned to the SIP provider selected in step **2**.
4. Click **Execute**.
5. Click **OK**.
6. Click **Apply**.
   Appropriate setting values designated by the SIP provider will be set in the parameters for the virtual SIP gateway ports.

Manual Programming

Follow the steps below to programme the parameters which are not automatically programmed by selecting a provider.

1. Click a desired tab.
2. Enter information or select from the list for each parameter.

Adding Settings to Provider Profiles

Follow the steps below to add the settings to provider profiles.

1. Click **Add Provider**.
   A dialogue box will appear. Available virtual SIP gateway port numbers are displayed in the list.
2. Highlight the desired port numbers or click **Select All** to select all the virtual SIP gateway port numbers to add the settings to provider profiles.
3. Click **Execute**.

Trunk Adaptor

To connect to a Trunk Adaptor, follow the steps below.

1. Ensure that the Trunk Adaptor is connected to the network and a power supply, and that all ports to be set are OUS.
2. Click **Trunk Adaptor**. The **Trunk Adaptor List** screen is displayed.
3. Enter a name (20 characters or less) for the Trunk Adaptor in **Trunk Adaptor Name**.
4. Enter the Trunk Adaptor's IP address in **Trunk Adaptor IP Address**.
5. To confirm that the setting is correct, click **CONNECT**. If the setting is correct, the Trunk Adaptor's Web Maintenance Console will open in a new browser window.
   For details about the Trunk Adaptor's Web Maintenance Console, refer to the documentation of the Trunk Adaptor.
6. Click **Next**. The **Set Trunk Adaptor** window will open.
7. In **Virtual SIP Gateway - Port Property - No. Range**, specify **From** and **To** to select a range of SIP connections to be used with the Trunk Adaptor. These numbers correspond to the **No.** column of the main **Port Property** screen.
8. In **Name : IP Address**, select a name and IP address previously entered on the **Trunk Adaptor List** screen.
9. In **SIP Server Port Number**, enter the SIP server's port number.
10. In **SIP Account / User Name**, enter a 3- to 5-digit number in **From**.
11. Click **Finish**, and the following settings are implemented:
    - ★ **Provider Name** and ◎ **SIP Server IP Address** in the **Main** tab will be set to match the selected Trunk Adaptor.
    - The ◎ **User Name** and ◎ **Authentication ID** in the **Account** tab will be set to the value specified in **SIP Account / User Name**, increased by 1 for each connection (i.e. if "401" was specified, **User Name** and ◎ **Authentication ID** for No. 1 will be set to "401", and then for No. 2 they will be set to "402", etc.).
12. In the **Calling Party** tab of the **V-SIPGW—Port Property** screen, set ★ **From Header—User Part** to **PBX-CLIP** for each port that was set to be used with the Trunk Adaptor.

Main

The **Shelf**, **Slot**, and **Port** for each item are displayed for your reference. For details, see **Common Programming Reference Items** in **9.1 PBX Configuration—[1-1] Configuration—Slot**.

◆ Connection

Indicates the port status. To change the status of the port, click the desired cell in the column, and then select **INS** or **OUS** for the port.
This option is only available in On-line mode.

Value Range

INS: The port is in service.
OUS: The port is out of service.
Fault: The port is not communicating with the network.

◆ Connection Attribute

Specifies whether to connect a port to a Trunk Adaptor or use it as a SIP gateway.

Value Range

SIP Provider, Trunk Adaptor

Feature Guide References

5.3.1 Trunk Adaptor Connection

◆ Trunk Property

Specifies the networking type of each SIP trunk.

Note

If ◆ Connection Attribute is set to "Trunk Adaptor" for the port, only "Public" will be available for this setting.

Value Range

Public, VPN

◆ Channel Attribute

Specifies the channel property of each port to enable several sessions to be performed for one subscription with the SIP provider.

Value Range

Basic channel: The subscriber channel that is assigned the SIP registration information.
Additional channel for SlotN (N=1–4) ChN (N=1–16): The subordinate channel that uses the same registration information as a Basic channel for SIP sessions. Select the Slot number and the Basic channel number to which the Additional channel belongs.
Not Used: The channel is not in use.

Note

- The Basic channel and Additional channel can belong to different V-SIPGW4 cards.
- When you save the data on the **Main** screen, for each virtual SIP gateway port that has **Channel Attribute** set to **Basic channel**, the following items are checked for duplication: **SIP Server Name**, **SIP Server IP Address**, and **SIP Service Domain**.
  A maximum of 32 different SIP providers can be programmed.

★ Provider Name

Specifies the name of the SIP provider.

Value Range

Max. 20 characters

★ SIP Server Name

Specifies the domain name of the SIP proxy server.

Note

Specify the domain name of the outbound proxy server, if provided by the SIP provider.

Value Range

Max. 100 characters

◎ SIP Server IP Address

Specifies the IP address of the SIP proxy server. This setting is compulsory when not using the DNS server.

Note

Specify the IP address of the outbound proxy server, if provided by the SIP provider.

Value Range

1.0.0.0–223.255.255.255

★ SIP Server Port Number

Specifies the port number of the SIP proxy server.

Value Range

1–65535

★ SIP Service Domain

Specifies the domain name provided by the SIP provider.

Value Range

Max. 100 characters

◆ Subscriber Number

Specifies the number used as the CLIP number.

Value Range

Max. 16 digits (consisting of 0–9, ＊, and #)

◆ P2P Group

Specifies the peer-to-peer group of the IP-Trunk.

Value Range

1–32

PC Programming Manual References

9.1 PBX Configuration—[1-1] Configuration—Slot—Main—◆ P2P Group

Feature Guide References

5.2.3 Peer-to-Peer (P2P) Connection

◆ P2P Group Name

Indicates the selected peer-to-peer group's name (reference only).

Value Range

P2P Group Name

PC Programming Manual References

9.1 PBX Configuration—[1-1] Configuration—Slot—Main—◆ P2P Group

Feature Guide References

5.2.3 Peer-to-Peer (P2P) Connection

Account

The **Shelf**, **Slot**, and **Port** for each item are displayed for your reference. For details, see **Common Programming Reference Items** in **9.1 PBX Configuration—[1-1] Configuration—Slot**.

◆ Connection

Indicates the port status. To change the status of the port, click the desired cell in the column, and then select **INS** or **OUS** for the port.
This option is only available in On-line mode.

Value Range

INS: The port is in service.
OUS: The port is out of service.
Fault: The port is not communicating with the network.

User Name

Specifies the user name (SIP Account) provided by the SIP provider.

Value Range

Max. 64 characters

Authentication ID

Specifies the authentication ID required for registration with the SIP server.

Value Range

Max. 64 characters

Authentication Password

Specifies the authentication password used for registration with the SIP provider.

Value Range

Max. 32 characters

Register

The **Shelf**, **Slot**, and **Port** for each item are displayed for your reference. For details, see **Common Programming Reference Items** in **9.1 PBX Configuration—[1-1] Configuration—Slot**.

◆ Connection

Indicates the port status. To change the status of the port, click the desired cell in the column, and then select **INS** or **OUS** for the port.
This option is only available in On-line mode.

Value Range

INS: The port is in service.
OUS: The port is out of service.
Fault: The port is not communicating with the network.

◆ Register Ability

Specifies whether to send the REGISTER message to the SIP server.

Value Range

Disable, Enable

★ Register Sending Interval

Specifies the maximum length of interval time after which the PBX sends the REGISTER message.

Value Range

10–86400 s

◆ Un-Register Ability when port INS

Specifies whether to unregister the previous registration and send the REGISTER message to the SIP server when the port status is set back to INS.

Value Range

Disable, Enable

★ Registrar Server Name

Specifies the domain name of the SIP server.

Value Range

Max. 100 characters

◎ Registrar Server IP Address

Specifies the IP address of the SIP server. This setting is compulsory when a register IP address is provided.

Value Range

1.0.0.0–223.255.255.255

★ Registrar Server Port Number

Specifies the port number of the SIP server.

Value Range

1–65535

◆ Register Resending Interval (s)

Specifies the interval time for resending the REGISTER message.

Value Range

0-65535 s

NAT

The **Shelf**, **Slot**, and **Port** for each item are displayed for your reference. For details, see **Common Programming Reference Items** in **9.1 PBX Configuration—[1-1] Configuration—Slot**.

◆ Connection

Indicates the port status. To change the status of the port, click the desired cell in the column, and then select **INS** or **OUS** for the port.
This option is only available in On-line mode.

Value Range

INS: The port is in service.
OUS: The port is out of service.
Fault: The port is not communicating with the network.

★ STUN Server—Name

Specifies the domain name of a STUN server.

Value Range

Max. 100 characters

◉ STUN Server—IP Address

Specifies the IP address of the STUN server. This setting is compulsory when the STUN method is selected and a DNS server is not used.

Value Range

1.0.0.0–223.255.255.255

★ STUN Server Port Number

Specifies the port number of the STUN server.

Value Range

1–65535

Option

The **Shelf**, **Slot**, and **Port** for each item are displayed for your reference. For details, see **Common Programming Reference Items** in **9.1 PBX Configuration—[1-1] Configuration—Slot**.

◆ Connection

Indicates the port status. To change the status of the port, click the desired cell in the column, and then select **INS** or **OUS** for the port.
This option is only available in On-line mode.

Value Range

INS: The port is in service.
OUS: The port is out of service.
Fault: The port is not communicating with the network.

★ Session Timer Ability

Enables the PBX to periodically refresh SIP sessions by sending repeated requests.

Value Range

Disable: This feature is not activated.
Enable (Active): Activates this feature only if the other device supports the feature.
Enable (Passive): Activates this feature only when requested by the other device.

★ Session Expire Timer

Specifies the length of time that the PBX waits before terminating SIP sessions when no reply to the repeated requests is received.

Value Range

90–3600 s

★ Session Refresh Method

Specifies the type of request that the PBX sends to periodically refresh SIP sessions.

Value Range

UPDATE, re-INVITE

◆ Session Incoming Refresher Request

Specifies the type of method used for establishing the session interval.

Value Range

UAC, UAS

◆ SIP 200 Response Timer (*100 ms)

Specifies the amount of time to wait for a SIP 200 (OK) response when establishing a connection between two parties. (Specifying "0" will disable the timer.)

Value Range

0–18000 × 100 ms

◆ SIP 18x Response Timer (s)

Specifies the amount of time to wait for a 18x response when establishing a connection between two parties.

Value Range

0–255 s

◆ Proxy-Require Option

Specifies option tags in a Proxy-Require header field so that the SIP server is notified that the client is behind a router with NAT enabled and firewall.

Value Range

Max. 100 characters

◆ Failover Timer(INVITE)

Specifies the amount of time to wait for a response for an INVITE request.

Value Range

0–30 s

Calling Party

The **Shelf**, **Slot**, and **Port** for each item are displayed for your reference. For details, see **Common Programming Reference Items** in **9.1 PBX Configuration—[1-1] Configuration—Slot**.

◆ Connection

Indicates the port status. To change the status of the port, click the desired cell in the column, and then select **INS** or **OUS** for the port.
This option is only available in On-line mode.

Value Range

INS: The port is in service.
OUS: The port is out of service.
Fault: The port is not communicating with the network.

★ Header Type

Specifies the header of the SIP message in which the caller information is stored.

Value Range

From Header, P-Preferred-Identity Header

★ From Header—User Part

Specifies the value to be stored in the username part of the SIP-URI of the From header.

Value Range

User Name, Authentication ID, PBX-CLIP

◆ From Header—SIP-URI

Specifies the complete SIP-URI address of the From header. The configuration in **From Header—User Part** will be invalid if this parameter is set.

Value Range

Max. 100 characters

★ P-Preferred-Identity Header—User Part

Specifies the value to be stored in the username part of the SIP-URI of the P-Preferred-Identity header.

Value Range

User Name, Authentication ID, PBX-CLIP

◆ P-Preferred-Identity Header—SIP-URI

Specifies the complete SIP-URI address of the P-Preferred-Identity header. The configuration in **P-Preferred-Identity Header—User Part** will be invalid if this parameter is set.

Value Range

Max. 100 characters

★ Number Format

Selects the format of the CLIP number to be sent to the called party.

Value Range

International, +International, National

Remove Digit

Specifies the number of leading digits of the CLIP number to be removed. This setting is compulsory when **PBX-CLIP** is selected in **From Header—User Part** or **P-Preferred-Identity Header—User Part**.

Value Range

0–32

Additional Dial

Specifies the number to be added to the CLIP number in the place of the removed digits. This setting is compulsory when **PBX-CLIP** is selected in **From Header—User Part** or **P-Preferred-Identity Header—User Part**.

Value Range

Max. 20 digits (consisting of 0–9, *, and #)

◆ Anonymous format in "From" header

Specifies the format of the "From" header when not sending caller ID.

Value Range

Display name and SIP-URI, Display name only

Note

If "**Display name and SIP-URI**" is selected, the display name part and the SIP-URI of the "From" header will be displayed as "**Anonymous**".
[Example]
From: **Anonymous** <sip:**anonymous@anonymous.invalid**>
If "**Display name only**" is selected, only the display name part of the "From" header will be displayed as "**Anonymous**".

[Example]
From: **Anonymous** <sip:1234@example.com>

◆ P-Asserted-Identity header

Select whether to include a P-Asserted-Identity header with caller information. This header will be sent independent of the selection for ★ **Header Type** (**From Header**/**P-Preferred-Identity Header**).

Value Range

Disable, Enable

Note

- To copy values from one location to another, click **Copy to**.
- If the **Channel Attribute** setting of the port is "Additional", the setting cannot be changed.

Called Party

The **Shelf**, **Slot**, and **Port** for each item are displayed for your reference. For details, see **Common Programming Reference Items** in **9.1 PBX Configuration—[1-1] Configuration—Slot**.

◆ Connection

Indicates the port status. To change the status of the port, click the desired cell in the column, and then select **INS** or **OUS** for the port.
This option is only available in On-line mode.

Value Range

INS: The port is in service.
OUS: The port is out of service.
Fault: The port is not communicating with the network.

★ Number Format

Specifies the format of an incoming call number.

Value Range

International, +International, National

★ Type

Specifies the header of the incoming SIP message in which the dialled number is stored.

Value Range

Request-URI, To header

◆ MEX - Prefix for Incoming

Specifies the Mobile Device Access prefix for incoming calls from MEX-enabled mobile devices.

Value Range

Max. 16 characters

◆ MEX - Prefix for Outgoing

Specifies the Mobile Device Access outgoing prefix for calls made to MEX-enabled mobile devices.

Value Range

Max. 16 characters

◆ MEX - Additional Dial

Specifies additional digits to be inserted before the dialled number of an incoming call from a MEX-enabled mobile device.

Value Range

Max. 7 digits (consisting of 0–9, *, and #)

Voice/FAX

The **Shelf**, **Slot**, and **Port** for each item are displayed for your reference. For details, see **Common Programming Reference Items** in **9.1 PBX Configuration—[1-1] Configuration—Slot**.

◆ Connection

Indicates the port status. To change the status of the port, click the desired cell in the column, and then select **INS** or **OUS** for the port.
This option is only available in On-line mode.

Value Range

INS: The port is in service.
OUS: The port is out of service.
Fault: The port is not communicating with the network.

◆ IP Codec Priority—1st, 2nd, 3rd

Specifies the priority of the codecs to be used. **None** is only available for 2nd and 3rd priorities.

Value Range

G.711A, G.711Mu, G.729A, None

◆ Packet Sampling Time (G.711A)

Specifies the time interval between measurements (samples) of sound data during a conversation. The smaller this number, the higher the quality of the transmitted sound.

Value Range

20 ms, 30 ms, 40 ms, 50 ms, 60 ms

◆ Packet Sampling Time (G.711Mu)

Specifies the time interval between measurements (samples) of sound data during a conversation. The smaller this number, the higher the quality of the transmitted sound.

Value Range

20 ms, 30 ms, 40 ms, 50 ms, 60 ms

◆ Packet Sampling Time (G.729A)

Specifies the time interval between measurements (samples) of sound data during a conversation. The smaller this number, the higher the quality of the transmitted sound.

Value Range

20 ms, 30 ms, 40 ms, 50 ms, 60 ms

◆ Voice Activity Detection for G.711

Enables the use of the Voice Activity Detection feature for the G.711 codec. This feature conserves bandwidth by detecting silent periods during a call and suppressing the packets of silence from being sent to the network.

Value Range

Disable, Enable

◆ Inform Annex B Status (G.729A)

Specifies whether to inform that Annex B for the G.729 codec is not supported.

Value Range

Disable, Enable

Note

Annex B expansion features for the G.729 codec are not supported by the V-SIPGW4 card. However, it is necessary to inform some carriers of this fact to avoid having calls disconnected. Carriers can be informed by enabling this feature.

◆ FAX Sending Method

Specifies the method of transporting the fax signal.

Value Range

G.711 Inband, T.38

◆ Maximum Bit Rate

Specifies the maximum bit rate of the fax signal.

Value Range

No Speed Limit, 2400 bps, 4800 bps, 7200 bps, 9600 bps, 12000 bps, 14400 bps

◆ FAX Detection Ability

Enables the use of the FAX Detection Ability feature. This feature enables end-to-end fax signal relay when the other party prefers a codec other than G.711. This feature functions only if the other party supports G.711.

Value Range

Disable, Enable

★ DTMF

Specifies the method to transport DTMF tones.

Value Range

Inband, Outband (RFC2833), Outband (SIP INFO)

◆ Payload Type

Specifies the payload type of RFC2833 for DTMF tones.

Note

Manual programming is required if **DTMF** is set to **Outband (RFC2833)**.

Value Range

96–127

RTP/RTCP

The **Shelf**, **Slot**, and **Port** for each item are displayed for your reference. For details, see **Common Programming Reference Items** in **9.1 PBX Configuration—[1-1] Configuration—Slot**.

◆ Connection

Indicates the port status. To change the status of the port, click the desired cell in the column, and then select **INS** or **OUS** for the port.
This option is only available in On-line mode.

Value Range

INS: The port is in service.
OUS: The port is out of service.
Fault: The port is not communicating with the network.

◆ RTP QoS Ability

Specifies the type of value to be stored in the ToS field in the IP header.

Value Range

ToS, DSCP, HEX

◆ RTP QoS-ToS Priority

Specifies the priority level in the ToS field.

Value Range

0–7

◆ RTP QoS-ToS Type

Specifies the ToS type in the ToS field.

Value Range

Normal, Monetary Cost, Reliability, Throughput, Delay

◆ RTP QoS-DSCP

Specifies the value in the ToS field by a DSCP for DiffServ.

Value Range

0–63

◆ RTP QoS-HEX

Specifies the value in the ToS field by a hexadecimal number.

Value Range

00–FF

◆ RTCP Packet Sending Ability

Specifies whether to enable each port to send RTCP packets.

Value Range

Disable, Enable

◆ RTCP Packet Interval

Specifies the interval time until the next RTCP packet is sent.

Value Range

5–60 s

◆ Keep Alive Timer

Specifies the length of time to send Keep Alive packets for the connection. Specifying "0 s" will disable the sending of Keep Alive packets.

Value Range

0 s, 10 s, 20 s, 30 s, 40 s, 50 s, 60 s

T.38

The **Shelf**, **Slot**, and **Port** for each item are displayed for your reference. For details, see **Common Programming Reference Items** in **9.1 PBX Configuration—[1-1] Configuration—Slot**.

◆ Connection

Indicates the port status. To change the status of the port, click the desired cell in the column, and then select **INS** or **OUS** for the port.

This option is only available in On-line mode.

Value Range

INS: The port is in service.
OUS: The port is out of service.
Fault: The port is not communicating with the network.

◆ T38 FAX Max Datagram

Specifies the maximum datagram size when using the T.38 protocol.

Value Range

272–512

◆ T38 FAX UDPTL Error Correction – Redundancy

Specifies whether to enable the redundancy feature when using the T.38 protocol.

Value Range

Disable, Enable

◆ T38 FAX UDPTL Redundancy count for T.30 messages

Specifies the redundancy count for T.30 messages when using the T.38 protocol.

Value Range

0–7

◆ T38 FAX UDPTL Redundancy count for data

Specifies the redundancy count for data when using the T.38 protocol.

Value Range

0–3

◆ T38 FAX Rate Management Method

Specifies the rate management method when using the T.38 protocol.

Value Range

Transferred TCF, Local TCF

◆ Reject T.38 Request from Network

Specifies whether T.38 protocol data requests are rejected or accepted.

Value Range

Disable, Enable

◆ T.38 FAX NAT Traversal

Specifies the NAT Traversal packet type when sending or receiving faxes using the T.38 protocol.

Value Range

Disable, Blank UDP

T.38 Option

The **Shelf**, **Slot**, and **Port** for each item are displayed for your reference. For details, see **Common Programming Reference Items** in **9.1 PBX Configuration—[1-1] Configuration—Slot**.

◆ Connection

Indicates the port status. To change the status of the port, click the desired cell in the column, and then select **INS** or **OUS** for the port.
This option is only available in On-line mode.

Value Range

INS: The port is in service.
OUS: The port is out of service.
Fault: The port is not communicating with the network.

◆ T38 FAX QoS Available

Specifies the type of value to be stored in the ToS field in the IP header when using the T.38 protocol.

Value Range

ToS, DSCP, HEX

◆ T38 FAX QoS-ToS Priority

Specifies the priority level in the ToS field when using the T.38 protocol.

Value Range

0–7

◆ T38 FAX QoS-ToS Type

Specifies the ToS type in the ToS field when using the T.38 protocol.

Value Range

Normal, Monetary Cost, Reliability, Throughput, Delay

T38 FAX QoS-DSCP

Specifies the value in the ToS field by a DSCP for DiffServ when using the T.38 protocol. This setting is compulsory when **DSCP** is selected in **T38 FAX QoS Available**.

Value Range

0–63

T38 FAX QoS-HEX

Specifies the value in the ToS field by a hexadecimal number when using the T.38 protocol. This setting is compulsory when **HEX** is selected in **T38 FAX QoS Available**.

Value Range

00–FF

DSP

The **Shelf**, **Slot**, and **Port** for each item are displayed for your reference. For details, see **Common Programming Reference Items** in **9.1 PBX Configuration—[1-1] Configuration—Slot**.

◆ Connection

Indicates the port status. To change the status of the port, click the desired cell in the column, and then select **INS** or **OUS** for the port.
This option is only available in On-line mode.

Value Range

INS: The port is in service.
OUS: The port is out of service.
Fault: The port is not communicating with the network.

◆ Echo Canceller Ability

Specifies the echo canceller ability time.

Value Range

OFF, 64 ms, 128 ms

◆ DSP Digital Gain (Down)

Specifies the DSP Digital Gain for the down voice path.

Value Range

-14–6 dB

◆ DSP Digital Gain (Up)

Specifies the DSP Digital Gain for the up voice path.

Value Range

-14–6 dB

◆ EC Gain

Specifies the Echo Canceller Gain.

Value Range

-14–6 dB

◆ NLP Setting

Specifies the NLP (Non-Linear Processor) setting to control echo sound quality.

Value Range

Disable, Weak, Normal, Strong

Supplementary Service

The **Shelf**, **Slot**, and **Port** for each item are displayed for your reference. For details, see **Common Programming Reference Items** in **9.1 PBX Configuration—[1-1] Configuration—Slot**.

◆ Connection

Indicates the port status. To change the status of the port, click the desired cell in the column, and then select **INS** or **OUS** for the port.
This option is only available in On-line mode.

Value Range

INS: The port is in service.
OUS: The port is out of service.
Fault: The port is not communicating with the network.

◆ CLIP (Receive)

Specify where caller information about an incoming call is obtained:

- Prioritised: P-Asserted-Identity→P-Preferred-Identity→From Header
- Fixed: From Header

Value Range

P-Asserted-Identity Header, From Header

Note

- To copy values from one location to another, click **Copy to**.
- If the **Channel Attribute** setting of the port is "Additional", the setting cannot be changed.

◆ CLIR

Specifies whether to allow restriction of the display of the CLIP number on the called party's telephone when making a SIP trunk call.

Value Range

Yes, No

★ CNIP (Send)

Specifies whether to send the caller's name to be displayed on the called party's telephone when making a SIP trunk call.

Value Range

Yes, No

★ CNIP (Receive)

Specifies whether to receive the caller's name to be displayed on the called party's telephone when receiving a SIP trunk call.

Value Range

Yes, No

◆ Blind Transfer(REFER)

Specifies whether to allow blind transfers using REFER.

Value Range

Yes, No

◆ Attended Transfer(REFER)

Specifies whether to allow attended transfers using REFER.

Value Range

Yes, No

Advanced

The **Shelf**, **Slot**, and **Port** for each item are displayed for your reference. For details, see **Common Programming Reference Items** in **9.1 PBX Configuration—[1-1] Configuration—Slot**.

◆ Connection

Indicates the port status. To change the status of the port, click the desired cell in the column, and then select **INS** or **OUS** for the port.
This option is only available in On-line mode.

Value Range

INS: The port is in service.
OUS: The port is out of service.
Fault: The port is not communicating with the network.

◆ Diversion Header

Enable this setting to allow the specified SIP trunks to detect incoming Mobile Device Access calls from MEX-enabled mobile devices.

Value Range

Disable, Enable

9.11 PBX Configuration—[1-1] Configuration—Slot—V-IPGW—Shelf Property

Common settings for all of the V-IPGW cards installed in the Virtual Shelf can be programmed.

Main

◆ Gatekeeper Available

Specifies whether to use a gatekeeper.

Value Range

Disable, Enable

◆ RTCP Packet Sending Ability

Specifies whether to enable the PBX to send RTCP packets.

Value Range

Disable, Enable

◆ RTCP Packet Interval

Specifies the length of time until the PBX retries to send RTCP packets when no reply is received.

Value Range

5–60 s

◆ RTP QoS Available

Specifies the type of value to be stored in the ToS field of the packet.

Value Range

ToS, DSCP, HEX

◆ RTP QoS-ToS Priority

Specifies the priority level in the ToS field.

Value Range

0–7

◆ RTP QoS-ToS Type

Specifies the ToS type in the ToS field.

Value Range

Normal, Monetary Cost, Reliability, Throughput, Delay

◆ RTP QoS-DSCP

Specifies the value in the ToS field by a DSCP for DiffServ.

Value Range

0–63

◆ RTP QoS-HEX

Specifies the value in the ToS field by a hexadecimal number.

Value Range

00–FF

◆ T38 FAX QoS Available

Specifies the type of value to be stored in the ToS field in the IP header when using the T.38 protocol.

Value Range

ToS, DSCP, HEX

◆ T38 FAX QoS-ToS Priority

Specifies the priority level in the ToS field when using the T.38 protocol.

Value Range

0–7

◆ T38 FAX QoS-ToS Type

Specifies the ToS type in the ToS field when using the T.38 protocol.

Value Range

Normal, Monetary Cost, Reliability, Throughput, Delay

◆ T38 FAX QoS-DSCP

Specifies the value in the ToS field by a DSCP for DiffServ when using the T.38 protocol. This setting is compulsory when **DSCP** is selected in **T38 FAX QoS Available**.

Value Range

0–63

◆ T38 FAX QoS-HEX

Specifies the value in the ToS field by a hexadecimal number when using the T.38 protocol. This setting is compulsory when **HEX** is selected in **T38 FAX QoS Available**.

Value Range

00–FF

◆ Echo Canceller Ability

Specifies the echo canceller ability time.

Value Range

OFF, 64 ms, 128 ms

Feature Guide References

5.2.1 IP Proprietary Telephone (IP-PT)

◆ DSP Digital Gain (Down)

Specifies the DSP Digital Gain for the down voice path.

Value Range

-14–6 dB

Feature Guide References

5.2.1 IP Proprietary Telephone (IP-PT)

◆ DSP Digital Gain (Up)

Specifies the DSP Digital Gain for the up voice path.

Value Range

-14–6 dB

Feature Guide References

5.2.1 IP Proprietary Telephone (IP-PT)

◆ EC Gain

Specifies the Echo Canceller Gain.

Value Range

-14–6 dB

Feature Guide References

5.2.1 IP Proprietary Telephone (IP-PT)

◆ NLP Setting

Specifies the NLP (Non-Linear Processor) setting to control echo sound quality.

Value Range

Disable, Weak, Normal, Strong

Feature Guide References

5.2.1 IP Proprietary Telephone (IP-PT)

◆ QSIG-CT

Enables a call to be transferred to a destination extension at another PBX in a QSIG network.

Value Range

No, Yes

Feature Guide References

4.2.4.4 Call Transfer (CT)—by QSIG

◆ QSIG-CF

Enables a call to be forwarded to a destination extension at another PBX in a QSIG network.

Value Range

No, Yes

Feature Guide References

4.2.4.3 Call Forwarding (CF)—by QSIG

◆ Trunk Property

Indicates the networking type of each trunk.

Value Range

Public, Private, VPN

Outgoing Call

◆ First-digit Timer (T302-1)

Specifies the length of time within which the first digit of a dial number must be dialled after seizing a virtual IP trunk.

Value Range

5–30 s

◆ Inter-digit Timer (T302-2)

Specifies the length of time within which subsequent digits of a dial number must be dialled.

Value Range

1–10 s

◆ Dial End Code

Specifies the delimiter code to be used to signal the end of a dialled number.

Value Range

0–9, #, *

Incoming Call

◆ Voice Activity Detection for G.711

Enables the use of the Voice Activity Detection feature for the G.711 codec. This feature conserves bandwidth by detecting silent periods during a call and suppressing the packets of silence from being sent to the network.

Value Range

Disable, Enable

◆ Voice Codec Priority 1st

Specifies the highest priority codec type. For fax communications, it is necessary to specify **G.711A** or **G.711Mu** for this parameter.

Value Range

G.711A, G.711Mu, G.729A

◆ Voice Codec Priority 2nd

Specifies the second highest priority codec type.

Value Range

None, G.711A, G.711Mu, G.729A

◆ Voice Codec Priority 3rd

Specifies the third highest priority codec type.

Value Range

None, G.711A, G.711Mu, G.729A

◆ Packet Sampling Time for G.711A

Specifies the time interval between measurements (samples) of sound data during a conversation. The smaller this number, the higher the quality of the transmitted sound.

Value Range

20 ms, 30 ms, 40 ms, 50 ms, 60 ms

◆ Packet Sampling Time for G.711Mu

Specifies the time interval between measurements (samples) of sound data during a conversation. The smaller this number, the higher the quality of the transmitted sound.

Value Range

20 ms, 30 ms, 40 ms, 50 ms, 60 ms

◆ Packet Sampling Time for G.729A

Specifies the time interval between measurements (samples) of sound data during a conversation. The smaller this number, the higher the quality of the transmitted sound.

Value Range

20 ms, 30 ms, 40 ms, 50 ms, 60 ms

◆ FAX Detection Ability

Enables the use of the FAX Detection Ability feature. Since fax signals using a codec other than G.711 cannot be received accurately at the destination, this feature automatically switches the codec to G.711 to enable end-to-end fax signal relay over the network.

Value Range

Disable, Enable

PC Programming Manual References

9.11 PBX Configuration—[1-1] Configuration—Slot—V-IPGW—Shelf Property—Incoming Call—◆ Voice Codec Priority 1st

◆ FAX Sending Method

Specifies the method of transporting the fax signal.

Value Range

G.711 Inband, T.38

◆ Maximum Bit Rate

Specifies the maximum bit rate of the fax signal.

Value Range

No Speed Limit, 2400 bps, 4800 bps, 7200 bps, 9600 bps, 12000 bps, 14400 bps

◆ DTMF

Specifies the type of DTMF tone to be sent out.

Value Range

Inband, Outband (RFC2833), Outband (H.245)

◆ Payload Type

Specifies the payload type for DTMF tones using RFC2833. Programming this parameter is only necessary if **DTMF** is set to **Outband (RFC2833)**.

Value Range
96–127

◆ T38 FAX Max Datagram

Specifies the maximum datagram size when using the T.38 protocol.

Value Range
272–512

◆ T38 FAX UDPTL Error Correction – Redundancy

Specifies whether to enable the redundancy feature when using the T.38 protocol.

Value Range
Disable, Enable

◆ T38 FAX UDPTL Redundancy count for T.30 messages

Specifies the redundancy count for T.30 messages when using the T.38 protocol.

Value Range
0–7

◆ T38 FAX UDPTL Redundancy count for data

Specifies the redundancy count for data when using the T.38 protocol.

Value Range
0–3

◆ T38 FAX Rate Management Method

Specifies the rate management method when using the T.38 protocol.

Value Range
Transferred TCF, Local TCF

Timer

◆ T301

Specifies the maximum time that the PBX waits for a reply after making a call.

Value Range
0–18000 × 100 ms

◆ T302

Specifies the maximum time allowed between each digit on an incoming call. Applies to overlap receiving.

Value Range

0–600 × 100 ms

◆ T303

Specifies the maximum time that the PBX waits for a reply after sending the SETUP (call setting) message.

Value Range

0–600 × 100 ms

◆ T304

Specifies the maximum time allowed between each digit on an outgoing call. Applies to overlap sending.

Value Range

0–3000 × 100 ms

◆ T305

Specifies the maximum time that the PBX waits for a reply after sending the DISC (disconnection) message.

Value Range

0–3000 × 100 ms

◆ T308

Specifies the maximum time that the PBX waits for a reply after receiving the Release message.

Value Range

0–600 × 100 ms

◆ T309

Specifies the length of time after which the PBX tries to disconnect the data link, before disconnecting the call.

Value Range

0–3000 × 100 ms

◆ T310

Specifies the maximum time that the PBX waits for a continuance message after receiving the Incoming Call Proceeding message.

Value Range

0–3000 × 100 ms

◆ T313

Specifies the maximum time that the PBX waits for a reply after sending the Connect message.

Value Range

0–600 × 100 ms

◆ T316

Specifies the maximum time that the PBX waits for a reply after sending the Restart message.

Value Range

0–3000 × 100 ms

◆ T318

Specifies the maximum time that the PBX waits for a reply after sending the Resume message.

Value Range

0–600 × 100 ms

◆ T319

Specifies the maximum time that the PBX waits for a reply after sending the Suspend message.

Value Range

0–600 × 100 ms

◆ T322

Specifies the maximum time that the PBX waits for a reply after sending the Status enquiry message.

Value Range

0–600 × 100 ms

◆ T3D3

Specifies the length of time after which the PBX tries to establish L2 in "Permanent" mode.

Value Range

0–3000 × 100 ms

◆ T3D9

Specifies the length of time after which the PBX tries to disconnect L2 in "Call by Call" mode.

Value Range

0–3000 × 100 ms

9.11.1 PBX Configuration—[1-1] Configuration—Slot—V-IPGW—Shelf Property—GK Settings

Gatekeeper registration information can be programmed.

◆ Destination Number

Specifies a telephone number to register with a gatekeeper.

Value Range

Max. 30 digits (consisting of 0–9)

◆ Device Name

Specifies the name of the device for programming reference.

Value Range

Max. 20 characters

9.11.2 PBX Configuration—[1-1] Configuration—Slot—V-IPGW—Shelf Property—Hunt Pattern

The related settings of hunt patterns can be programmed. The hunt pattern determines how to route incoming calls through virtual IP trunks to the PBX.
A maximum of 32 hunt patterns can be programmed.

Hunt Pattern 1–16

◆ Leading Number

Specifies the leading digits of dialled numbers by which to determine the call distribution port group to direct incoming calls.

Value Range

Max. 30 digits (consisting of 0–9)

◆ Call Distribution Port Group—1st–16th

Specifies the number of the call distribution port group to which incoming calls are directed in priority.

Value Range

For 1st:

CDPG1–CDPG48

For 2nd–16th:

None, CDPG1–CDPG48

PC Programming Manual References

9.12 PBX Configuration—[1-1] Configuration—Slot—V-IPGW—Port Property—◆ Call Distribution Port Group

Feature Guide References

4.2.2.3 Call Distribution Port Group

9.12 PBX Configuration—[1-1] Configuration—Slot—V-IPGW—Port Property

Various settings can be programmed for each virtual IP Gateway port.
The **Shelf**, **Slot**, and **Port** for each item are displayed for your reference. For details, see **Common Programming Reference Items** in **9.1 PBX Configuration—[1-1] Configuration—Slot**.

Trunk Adaptor

To connect to a Trunk Adaptor, follow the steps below.

1. Ensure that the Trunk Adaptor is connected to the network and a power supply.
2. Click **Trunk Adaptor**. The **Trunk Adaptor List** screen is displayed.
3. Enter a name (20 characters or less) for the Trunk Adaptor in **Trunk Adaptor Name**.
4. Enter the Trunk Adaptor's IP address in **Trunk Adaptor IP Address**.
5. To confirm that the setting is correct, click **CONNECT**. If the setting is correct, the Trunk Adaptor's Web Maintenance Console will open in a new browser window.
   For details about the Trunk Adaptor's Web Maintenance Console, refer to the documentation of the Trunk Adaptor.
6. Click **OK**.

◆ Connection

Indicates the port status. To change the status of the port, click the desired cell in the column, and then select **INS** or **OUS** for the port.
This option is only available in On-line mode.

Value Range

INS: The port is in service.
OUS: The port is out of service.
Fault: The port is not communicating with the network.

◆ Connection Attribute

Specifies whether to connect a port to a Trunk Adaptor or use it as an IP gateway.

Value Range

Gateway, Trunk Adaptor

Feature Guide References

5.3.1 Trunk Adaptor Connection

◆ Call Distribution Port Group

Specifies a call distribution port group to which incoming trunk calls are directed through the virtual VoIP gateway port.

Value Range

1–48

Feature Guide References

4.2.2.3 Call Distribution Port Group

9.13 PBX Configuration—[1-1] Configuration—Slot—V-IPEXT—Card Property

The properties of the V-IPEXT card can be specified.

◆ Signalling (PTAP) UDP Port No. (Server)

Specifies the UDP port used by the V-IPEXT card to transmit and receive PTAP (Panasonic Telephony Administration Protocol) data. This must be changed if another network application is using the same port.
To change the value displayed here, click **Common Settings** and set the desired value.

Value Range

1024–65535

Feature Guide References

5.2.1 IP Proprietary Telephone (IP-PT)

◆ Signalling (MGCP) UDP Port No. (Server)

Specifies the UDP port used by the V-IPEXT card to transmit and receive MGCP (Media Gateway Control Protocol) data. This must be changed if another network application is using the same port.
To change the value displayed here, click **Common Settings** and set the desired value.

Value Range

1024–65535

Feature Guide References

5.2.1 IP Proprietary Telephone (IP-PT)

◆ Signalling (MGCP) UDP Port No. (IP-PT)

Indicates the UDP port used to transmit and receive MGCP (Media Gateway Control Protocol) data on the IP-PT side (reference only).

Value Range

2427

Feature Guide References

5.2.1 IP Proprietary Telephone (IP-PT)

◆ Keep Alive Time-Out

Specifies the length of time that the PBX will continue to consider an IP-PT to be active even if it receives no transmissions from that IP-PT. The PBX constantly confirms the status of IP-PTs. If no communications are received from an IP-PT for the duration specified here, the PBX considers the IP-PT to be unreachable, and sets the port status to **Fault**.

During operation, set between 10 s and 60 s. Settings over 60 s, and **Disable**, are used for debugging purposes, and IP-PTs cannot be guaranteed to function normally in these circumstances. Do not use debugging settings unless instructed to do so.
To change the value displayed here, click **Common Settings** and set the desired value.

Value Range

Disable, 10–120 s

Feature Guide References

5.2.1 IP Proprietary Telephone (IP-PT)

◆ First Resending Time (PTAP)

Specifies the length of time that the PBX waits before starting to resend PTAP (Panasonic Telephony Administration Protocol) data.
To change the value displayed here, click **Common Settings** and set the desired value.

Value Range

500 × n (n=1–16) ms

Feature Guide References

5.2.1 IP Proprietary Telephone (IP-PT)

◆ Resending Time Out (PTAP)

Specifies the length of time after which the PBX terminates resending PTAP (Panasonic Telephony Administration Protocol) data.
To change the value displayed here, click **Common Settings** and set the desired value.

Value Range

150–240 s

Feature Guide References

5.2.1 IP Proprietary Telephone (IP-PT)

◆ First Resending Time (MGCP)

Specifies the length of time that the PBX waits before starting to resend MGCP (Media Gateway Control Protocol) data.
To change the value displayed here, click **Common Settings** and set the desired value.

Value Range

500 × n (n=1–8) ms

Feature Guide References

5.2.1 IP Proprietary Telephone (IP-PT)

◆ Resending Time Out (MGCP)

Specifies the length of time after which the PBX terminates resending MGCP (Media Gateway Control Protocol) data.
To change the value displayed here, click **Common Settings** and set the desired value.

Value Range

75–120 s

Feature Guide References

5.2.1 IP Proprietary Telephone (IP-PT)

◆ Echo Canceller Ability

Specifies the echo canceller ability time.

Note

For KX-NT500 series phones, in place of this setting, the setting for ◆ **Echo Cancellation Ability** in **9.19 PBX Configuration—[1-1] Configuration—Slot—V-UTEXT—Card Property—Main** is applied.

Value Range

OFF, 64 ms, 128 ms

Feature Guide References

5.2.1 IP Proprietary Telephone (IP-PT)

◆ DSP Digital Gain (Down)

Specifies the DSP Digital Gain for the down voice path.

Note

For KX-NT500 series phones, in place of this setting, the setting for ◆ **DSP Digital Gain (Down)** in **9.19 PBX Configuration—[1-1] Configuration—Slot—V-UTEXT—Card Property—Main** is applied.

Value Range

-14–6 dB

Feature Guide References

5.2.1 IP Proprietary Telephone (IP-PT)

◆ DSP Digital Gain (Up)

Specifies the DSP Digital Gain for the up voice path.

Note

For KX-NT500 series phones, in place of this setting, the setting for ◆ **DSP Digital Gain (Up)** in **9.19 PBX Configuration—[1-1] Configuration—Slot—V-UTEXT—Card Property—Main** is applied.

Value Range

-14–6 dB

Feature Guide References

5.2.1 IP Proprietary Telephone (IP-PT)

◆ EC Gain

Specifies the Echo Canceller Gain.

Note

For KX-NT500 series phones, in place of this setting, the setting for ◆ **EC Gain** in **9.19 PBX Configuration—[1-1] Configuration—Slot—V-UTEXT—Card Property—Main** is applied.

Value Range

-14–6 dB

Feature Guide References

5.2.1 IP Proprietary Telephone (IP-PT)

◆ NLP Setting

Specifies the NLP (Non-Linear Processor) setting to control echo sound quality.

Note

For KX-NT500 series phones, in place of this setting, the setting for ◆ **NLP Setting** in **9.19 PBX Configuration—[1-1] Configuration—Slot—V-UTEXT—Card Property—Main** is applied.

Value Range

Disable, Weak, Normal, Strong

Feature Guide References

5.2.1 IP Proprietary Telephone (IP-PT)

9.14 PBX Configuration—[1-1] Configuration—Slot—V-IPEXT—Port Property

Various settings can be programmed for each virtual IP extension port.

IP-PT Registration and De-registration

An IP-PT must be registered to the PBX by programming the PBX and IP-PT before it can be used.
Programming instructions for the PBX are given below.
It is possible to de-register the IP-PT later.
IP-PT Registration, De-registration, and Forced De-registration can be performed only in On-line mode.

◆ Preparation

Open **27.1 Network Service—[1] IP Address/Ports—Basic Settings**, and confirm that the IP addresses of the mother board and DSP card, subnet mask address, and default gateway address are set.

◆ Registration

Follow the steps below to register the IP-PT.

1. Connect the IP-PT to be registered to the network and, if necessary, the power supply.
2. Click **Registration**.
   A dialogue box will appear. Non-registered (available) extension numbers and names are displayed on the left.
3. Highlight numbers and names and click the right arrow to select them for registration. Click **Next**.
4. Click **Next**.
5. If the registration is still in progress, the dialogue box will show "Registration Executing".
   If the registration is successful, the dialogue box will show "Registration Completed". Click **Close**.
   Once the IP-PT is successfully registered, the status of the IP-PT will update to show "Registered".

◆ De-registration

Follow the steps below to de-register the IP-PT.

1. Click **De-registration**.
   A dialogue box will appear. Registered extension numbers and names are displayed on the left.
2. Highlight numbers and names and click the right arrow to select them for de-registration. Click **Next**.
   A dialogue box will appear.
3. Click **Confirm**.
   If the de-registration is successful, the dialogue box will show "De-registration Succeed".
4. Click **Close**.
   Once the IP-PT is successfully de-registered, the status of the IP-PT will update to show "None".

◆ Forced De-registration

Follow the steps below to forcibly de-register the IP-PT when normal de-registration has been unsuccessful or IP address settings have been changed or deleted only on the IP-PT.

1. Click **Forced De-registration**.
   A dialogue box will appear. Registered extension numbers and names are displayed on the left.

2. Highlight numbers and names and click the right arrow to select them for forced de-registration. Click **Next**.
   A dialogue box will appear.
3. Click **OK**.
   A dialogue box will appear.
4. Click **Confirm**.
   If the de-registration is successful, the dialogue box will show "Forced De-registration Succeed".
5. Click **Close**.
   Once the IP-PT is successfully de-registered, the status of the IP-PT will update to show "None".

Main

The **Shelf**, **Slot**, and **Port** for each item are displayed for your reference. For details, see **Common Programming Reference Items** in **9.1 PBX Configuration—[1-1] Configuration—Slot**.

◆ Extension Number

Specifies the extension number of the port.

Value Range

Max. 5 digits (consisting of 0–9)

Feature Guide References

5.2.1 IP Proprietary Telephone (IP-PT)

◆ Extension Name

Specifies the extension name of the port.

Value Range

Max. 20 characters

Feature Guide References

5.2.1 IP Proprietary Telephone (IP-PT)

◆ Connection

Indicates the port status. To change the status of the port, click the desired cell in the column, and then select **INS** or **OUS** for the port.
This option is only available in On-line mode.

Value Range

INS: The port is in service.
OUS: The port is out of service.
Fault: The port is not communicating with the network.

Feature Guide References

5.2.1 IP Proprietary Telephone (IP-PT)

◆ Status

Indicates whether a certain IP-PT is registered (reference only).

Value Range

None, Registered

Feature Guide References

5.2.1 IP Proprietary Telephone (IP-PT)

◆ IP Phone Registration ID (MAC Address)

Specifies the MAC address of the IP-PT.
This parameter can only be modified when **Connection** on this screen is set to **OUS**.

Value Range

00:00:00:00:00:00–FF:FF:FF:FF:FF:FF

Feature Guide References

5.2.1 IP Proprietary Telephone (IP-PT)

◆ Current IP Address

Indicates the current IP address of the IP-PT (reference only).

Value Range

1.0.0.0–223.255.255.255

Feature Guide References

5.2.1 IP Proprietary Telephone (IP-PT)

◆ Program Ver.

Indicates the programme software file version of the IP-PT (reference only).

Value Range

Version number

Feature Guide References

5.2.1 IP Proprietary Telephone (IP-PT)

◆ P2P Group

Specifies the peer-to-peer group of the IP-PT.

Value Range

1–32

PC Programming Manual References

9.2.1 PBX Configuration—[1-1] Configuration—Slot—System Property—Main—◆ P2P Group

Feature Guide References

5.2.3 Peer-to-Peer (P2P) Connection

◆ P2P Group Name

Indicates the selected peer-to-peer group's name (reference only).

Value Range

P2P Group Name

PC Programming Manual References

9.2.2 PBX Configuration—[1-1] Configuration—Slot—System Property—Site—Main—◆ P2P Group

Feature Guide References

5.2.3 Peer-to-Peer (P2P) Connection

Option

The **Shelf**, **Slot**, and **Port** for each item are displayed for your reference. For details, see **Common Programming Reference Items** in **9.1 PBX Configuration—[1-1] Configuration—Slot**.

◆ Extension Number

Specifies the extension number of the port.

Value Range

Max. 5 digits (consisting of 0–9)

Feature Guide References

5.2.1 IP Proprietary Telephone (IP-PT)

◆ Extension Name

Specifies the extension name of the port.

Value Range

Max. 20 characters

Feature Guide References

5.2.1 IP Proprietary Telephone (IP-PT)

◆ Connection

Indicates the port status. To change the status of the port, click the desired cell in the column, and then select **INS** or **OUS** for the port.
This option is only available in On-line mode.

Value Range

INS: The port is in service.
OUS: The port is out of service.
Fault: The port is not communicating with the network.

Feature Guide References

5.2.1 IP Proprietary Telephone (IP-PT)

◆ Headset OFF/ON

Turns on or off the use of a headset with the IP-PT.

Value Range

Headset OFF, Headset ON

Feature Guide References

2.11.4 Headset Operation
5.2.1 IP Proprietary Telephone (IP-PT)

◆ C.Waiting with Headset

Selects the Call Waiting tone generating device when using a headset. This setting is displayed when "Headset ON" is selected for **Headset OFF/ON**.

Value Range

PT Tone, Headset

Feature Guide References

5.2.1 IP Proprietary Telephone (IP-PT)

◆ Ringing Tone

Selects the dual-tone switching pattern of the ring tone for incoming calls.

Value Range

A: 64 ms (697 Hz), 64 ms (852 Hz)
B: 32 ms (697 Hz), 32 ms (852 Hz)
C: 128 ms (697 Hz), 128 ms (852 Hz)
D: 32 ms (697 Hz), 96 ms (852 Hz)

Feature Guide References

5.2.1 IP Proprietary Telephone (IP-PT)

◆ IP Codec Priority

Specifies the codec used for compression and decompression of transmitted data.
Some codecs may become unavailable depending on the value set here, as follows:

– When **G.722** is selected, the priority is **G.722** → **G.711** → **G.729A**.
– When **G.711** is selected, the priority is **G.711** → **G.729A** (**G.722** is unavailable).
– When **G.729A** is selected, both **G.711** and **G.722** are unavailable.

Value Range

G.711, G.729A, G.722

Feature Guide References

5.2.1 IP Proprietary Telephone (IP-PT)

◆ Packet Sampling Time (G.711/G.722)

Specifies the time interval between measurements (samples) of sound data during a conversation.
The smaller this number, the higher the quality of the transmitted sound.

Value Range

20 ms, 30 ms, 40 ms, 60 ms

Feature Guide References

5.2.1 IP Proprietary Telephone (IP-PT)

◆ Packet Sampling Time (G.729A)

Specifies the time interval between measurements (samples) of sound data during a conversation.
The smaller this number, the higher the quality of the transmitted sound.

Value Range

20 ms, 30 ms, 40 ms, 60 ms

Feature Guide References

5.2.1 IP Proprietary Telephone (IP-PT)

◆ Announce Mode

Specifies if the extension's built-in ANNOUNCE feature is enabled. A KX-NT265, KX-NT300 series, or KX-NT500 series phone in a remote location with ANNOUNCE enabled can provide the PBX's IP Address information to other terminals in the remote location in place of manually programming the PBX's IP address at each terminal.

Value Range

Enable, Disable

Feature Guide References

5.2.1 IP Proprietary Telephone (IP-PT)

Voice

The **Shelf**, **Slot**, and **Port** for each item are displayed for your reference. For details, see **Common Programming Reference Items** in **9.1 PBX Configuration—[1-1] Configuration—Slot**.

◆ Extension Number

Specifies the extension number of the port.

Value Range

Max. 5 digits (consisting of 0–9)

Feature Guide References

5.2.1 IP Proprietary Telephone (IP-PT)

◆ Extension Name

Specifies the extension name of the port.

Value Range

Max. 20 characters

Feature Guide References

5.2.1 IP Proprietary Telephone (IP-PT)

◆ Connection

Indicates the port status. To change the status of the port, click the desired cell in the column, and then select **INS** or **OUS** for the port.
This option is only available in On-line mode.

Value Range

INS: The port is in service.
OUS: The port is out of service.
Fault: The port is not communicating with the network.

Feature Guide References

5.2.1 IP Proprietary Telephone (IP-PT)

◆ DTMF

Specifies the type of DTMF tone to be sent out.

Value Range

Inband, Outband (RFC2833)

Feature Guide References

5.2.1 IP Proprietary Telephone (IP-PT)

◆ Payload Type

Specifies the payload type for DTMF tones using RFC2833. Programming this parameter is only necessary if **DTMF** is set to **Outband (RFC2833)**.

Value Range

96–127

Feature Guide References

5.2.1 IP Proprietary Telephone (IP-PT)

Remote Place

The **Shelf**, **Slot**, and **Port** for each item are displayed for your reference. For details, see **Common Programming Reference Items** in **9.1 PBX Configuration—[1-1] Configuration—Slot**.

◆ Extension Number

Specifies the extension number of the port.

Value Range

Max. 5 digits (consisting of 0–9)

Feature Guide References

5.2.1 IP Proprietary Telephone (IP-PT)

◆ Extension Name

Specifies the extension name of the port.

Value Range

Max. 20 characters

Feature Guide References

5.2.1 IP Proprietary Telephone (IP-PT)

◆ Connection

Indicates the port status. To change the status of the port, click the desired cell in the column, and then select INS or OUS for the port. This option is only available in On-line mode.

Value Range

INS: The port is in service.
OUS: The port is out of service.
Fault: The port is not communicating with the network.

Feature Guide References

5.2.1 IP Proprietary Telephone (IP-PT)

◆ Phone Location

Specifies the type of extension connected to the port.

Value Range

Local: The extension is located on the same network as the PBX (standard configuration).
Remote (MRG): The extension is accessing the PBX remotely (use Media Relay Gateway).

Feature Guide References

5.2.1 IP Proprietary Telephone (IP-PT)

9.15 PBX Configuration—[1-1] Configuration—Slot—V-SIPEXT—Card Property

The properties of the virtual SIP Extension card can be specified.
To change the value displayed here, click **Common Settings** and set the desired value.

◆ Echo Canceller Ability

Specifies the echo canceller ability time.

Value Range

OFF, 64 ms, 128 ms

Feature Guide References

5.2.2 SIP (Session Initiation Protocol) Extension

◆ DSP Digital Gain (Down)

Specifies the DSP Digital Gain for the down voice path.

Value Range

-14–6 dB

Feature Guide References

5.2.2 SIP (Session Initiation Protocol) Extension

◆ DSP Digital Gain (Up)

Specifies the DSP Digital Gain for the up voice path.

Value Range

-14–6 dB

Feature Guide References

5.2.2 SIP (Session Initiation Protocol) Extension

◆ EC Gain

Specifies the Echo Canceller Gain.

Value Range

-14–6 dB

Feature Guide References

5.2.2 SIP (Session Initiation Protocol) Extension

◆ NLP Setting

Specifies the NLP (Non-Linear Processor) setting to control echo sound quality.

Value Range

Disable, Weak, Normal, Strong

Feature Guide References

5.2.2 SIP (Session Initiation Protocol) Extension

9.16 PBX Configuration—[1-1] Configuration—Slot—V-SIPEXT—Port Property

Various settings can be programmed for each virtual SIP extension port.
The **Shelf**, **Slot**, and **Port** for each item are displayed for your reference. For details, see **Common Programming Reference Items** in **9.1 PBX Configuration—[1-1] Configuration—Slot**.

Main

◆ Extension Number

Specifies the extension number of the port.

Value Range

Max. 5 digits (consisting of 0–9)

Feature Guide References

5.2.2 SIP (Session Initiation Protocol) Extension

◆ Password

Specifies the password used for registering a SIP Extension to the PBX. While it is possible to enter a password manually for each SIP Extension, you can copy ◆ **Extension Number** to ◆ **Password** by clicking the **Copy to** button. This parameter can only be modified when the virtual SIP extension port is set to OUS, and the programmer must be in On-line mode.

Value Range

4–16 characters (consisting of 0–9, a–z, A–Z)

Feature Guide References

5.2.2 SIP (Session Initiation Protocol) Extension

◆ Connection

Indicates the port status. To change the status of the port, click the desired cell in the column, and then select **INS** or **OUS** for the port.
This option is only available in On-line mode.

Value Range

INS: The port is in service.
OUS: The port is out of service.
Fault: The port is not communicating with the network.

Feature Guide References

5.2.2 SIP (Session Initiation Protocol) Extension

◆ Current IP Address

Indicates the current IP address of the SIP Extension (reference only).

Value Range

1.0.0.0–223.255.255.255

Feature Guide References

5.2.2 SIP (Session Initiation Protocol) Extension

◆ P2P Group

Specifies the peer-to-peer group.

Value Range

1–32

PC Programming Manual References

9.2.2 PBX Configuration—[1-1] Configuration—Slot—System Property—Site—Main—◆ P2P Group

Feature Guide References

5.2.3 Peer-to-Peer (P2P) Connection

◆ P2P Group Name

Indicates the selected peer-to-peer group's name (reference only).

Value Range

P2P Group Name

PC Programming Manual References

9.2.2 PBX Configuration—[1-1] Configuration—Slot—System Property—Site—Main—◆ P2P Group
11.10 PBX Configuration—[3-10] Group—P2P Group

Feature Guide References

5.2.3 Peer-to-Peer (P2P) Connection

◆ MWI Method

Selects the method of receiving Message Waiting Indications for SIP extensions.

Value Range

Standard, Unsolicited

Note

If "Standard" is selected, a maximum of 64 SIP extensions can be used.

Feature Guide References

2.20.1 Message Waiting
5.2.2 SIP (Session Initiation Protocol) Extension

Option

The Shelf, Slot, and Port for each item are displayed for your reference. For details, see Common Programming Reference Items in 9.1 PBX Configuration—[1-1] Configuration—Slot.

◆ Extension Number

Specifies the extension number of the port.

Value Range

Max. 5 digits (consisting of 0–9)

Feature Guide References

5.2.2 SIP (Session Initiation Protocol) Extension

◆ Password

Specifies the password used for registering a SIP Extension to the PBX. While it is possible to enter a password manually for each SIP Extension, you can copy the value for ◆ **Extension Number** to ◆ **Password** by clicking the **Copy to** button. This parameter can only be modified when the virtual SIP extension port is set to **OUS**, and the programmer must be in On-line mode.

Value Range

4–16 characters (consisting of 0–9, a–z, A–Z)

Feature Guide References

5.2.2 SIP (Session Initiation Protocol) Extension

◆ Connection

Indicates the port status. To change the status of the port, click the desired cell in the column, and then select **INS** or **OUS** for the port. This option is only available in On-line mode.

Value Range

INS: The port is in service
OUS: The port is out of service
Fault: The port is not communicating with the network.

Feature Guide References

5.2.2 SIP (Session Initiation Protocol) Extension

◆ Bearer

Selects the bearer mode. When **Automatic** is selected, the bearer mode is set to **Speech** automatically.

Value Range

Automatic, Speech, Audio

Feature Guide References

5.2.2 SIP (Session Initiation Protocol) Extension

◆ Packet Sampling Time (G.711/G.722)

Specifies the time interval between measurements (samples) of sound data during a conversation. The smaller this number, the higher the quality of the transmitted sound.

Value Range

20 ms, 30 ms, 40 ms, 50 ms, 60 ms

Feature Guide References

5.2.2 SIP (Session Initiation Protocol) Extension

◆ Packet Sampling Time (G.729A)

Specifies the time interval between measurements (samples) of sound data during a conversation. The smaller this number, the higher the quality of the transmitted sound.

Value Range

20 ms, 30 ms, 40 ms, 50 ms, 60 ms

Feature Guide References

5.2.2 SIP (Session Initiation Protocol) Extension

Remote Place

The Shelf, Slot, and Port for each item are displayed for your reference. For details, see Common Programming Reference Items in 9.1 PBX Configuration—[1-1] Configuration—Slot.

◆ Extension Number

Specifies the extension number of the port.

Value Range

Max. 5 digits (consisting of 0–9)

Feature Guide References

5.2.2 SIP (Session Initiation Protocol) Extension

◆ Password

Specifies the password used for registering a SIP Extension to the PBX. While it is possible to enter a password manually for each SIP Extension, you can copy the value for ◆ **Extension Number** to ◆ **Password** by clicking

the **Copy to** button. This parameter can only be modified when the virtual SIP extension port is set to **OUS**, and the programmer must be in On-line mode.

Value Range

4–16 characters (consisting of 0–9, a–z, A–Z)

Feature Guide References

5.2.2 SIP (Session Initiation Protocol) Extension

◆ Connection

Indicates the port status. To change the status of the port, click the desired cell in the column, and then select **INS** or **OUS** for the port. This option is only available in On-line mode.

Value Range

INS: The port is in service
OUS: The port is out of service
Fault: The port is not communicating with the network.

Feature Guide References

5.2.2 SIP (Session Initiation Protocol) Extension

◆ Phone Location

Specifies the type of extension connected to the port.

Value Range

Local: The extension is located on the same network as the PBX (standard configuration).
Remote (MRG): The extension is accessing the PBX remotely (Media Relay Gateway).

Feature Guide References

5.2.2 SIP (Session Initiation Protocol) Extension

FAX/T.38

The Shelf, Slot, and Port for each item are displayed for your reference. For details, see Common Programming Reference Items in 9.1 PBX Configuration—[1-1] Configuration—Slot.

◆ Extension Number

Specifies the extension number of the port.

Value Range

Max. 5 digits (consisting of 0–9)

Feature Guide References

5.2.2 SIP (Session Initiation Protocol) Extension

◆ Password

Specifies the password used for registering a SIP Extension to the PBX. While it is possible to enter a password manually for each SIP Extension, you can copy the value for ◆ **Extension Number** to ◆ **Password** by clicking the **Copy to** button. This parameter can only be modified when the virtual SIP extension port is set to **OUS**, and the programmer must be in On-line mode.

Value Range

4–16 characters (consisting of 0–9, a–z, A–Z)

Feature Guide References

5.2.2 SIP (Session Initiation Protocol) Extension

◆ Connection

Indicates the port status. To change the status of the port, click the desired cell in the column, and then select **INS** or **OUS** for the port. This option is only available in On-line mode.

Value Range

INS: The port is in service
OUS: The port is out of service
Fault: The port is not communicating with the network.

Feature Guide References

5.2.2 SIP (Session Initiation Protocol) Extension

◆ FAX Detection Ability

Enables the use of the FAX Detection Ability feature.

Value Range

Disable, Enable

Feature Guide References

5.2.2 SIP (Session Initiation Protocol) Extension

◆ FAX Sending Method

Specifies the method of transporting the fax signal.

Value Range

G.711 Inband, T.38

Feature Guide References

5.2.2 SIP (Session Initiation Protocol) Extension

◆ Maximum Bit Rate

Specifies the maximum bit rate of the fax signal.

Value Range

No Speed Limit, 2400 bps, 4800 bps, 7200 bps, 9600 bps, 12000 bps, 14400 bps

Feature Guide References

5.2.2 SIP (Session Initiation Protocol) Extension

◆ T38 FAX Max Datagram

Specifies the maximum datagram size when using the T.38 protocol.

Value Range

272–512

Feature Guide References

5.2.2 SIP (Session Initiation Protocol) Extension

◆ T38 FAX UDPTL Error Correction – Redundancy

Specifies whether to enable the redundancy feature when using the T.38 protocol.

Value Range

Disable, Enable

Feature Guide References

5.2.2 SIP (Session Initiation Protocol) Extension

◆ T38 FAX UDPTL Redundancy count for T.30 messages

Specifies the redundancy count for T.30 messages when using the T.38 protocol.

Value Range

0–7

Feature Guide References

5.2.2 SIP (Session Initiation Protocol) Extension

◆ T38 FAX UDPTL Redundancy count for data

Specifies the redundancy count for data when using the T.38 protocol.

Value Range

0–3

Feature Guide References

5.2.2 SIP (Session Initiation Protocol) Extension

◆ T38 FAX Rate Management Method

Specifies the rate management method when using the T.38 protocol.

Value Range

Transferred TCF, Local TCF

Feature Guide References

5.2.2 SIP (Session Initiation Protocol) Extension

9.17 PBX Configuration—[1-1] Configuration—Slot—V-IPCS—Card Property

The properties of the V-IPCS card can be specified.

◆ Signalling (PTAP) UDP Port No. (Server)

Specifies the UDP port used by the V-IPCS card to transmit and receive PTAP (Panasonic Telephony Administration Protocol) data. This must be changed if another network application is using the same port.
To change the value displayed here, click **Common Settings** and set the desired value.

Value Range

1024–65535

◆ Signalling (MGCP) UDP Port No. (Server)

Specifies the UDP port used by the V-IPCS card to transmit and receive MGCP (Media Gateway Control Protocol) data. This must be changed if another network application is using the same port.
To change the value displayed here, click **Common Settings** and set the desired value.

Value Range

1024–65535

◆ Signalling (MGCP) UDP Port No. (IP-CS)

Indicates the UDP port used to transmit and receive MGCP (Media Gateway Control Protocol) data on the IP-CS side (reference only).

Value Range

2427

◆ Voice (RTP) UDP Port No. (IP-CS)

Specifies the UDP port used to transmit and receive RTP (Real-time Transfer Protocol) data on the IP-CS side. This must be changed if another network application is using the same port.
For voice communications, an IP-CS uses 128 contiguous UDP ports, starting from the port number specified here.
To change the value displayed here, click **Common Settings** and set the desired value.

Value Range

1024–65024

◆ Keep Alive Time-Out

Specifies the length of time that the PBX will continue to consider an IP-CS to be active even if it receives no transmissions from that IP-CS. The PBX constantly confirms the status of IP-CSs. If no communications are received from an IP-CS for the duration specified here, the PBX considers the IP-CS to be unreachable, and sets the port status to **Fault**.
During operation, set between 10 s and 60 s. Settings over 60 s, and **Disable**, are used for debugging purposes, and IP-CSs cannot be guaranteed to function normally in these circumstances. Do not use debugging settings unless instructed to do so.

To change the value displayed here, click **Common Settings** and set the desired value.

Value Range

Disable, 10–120 s

◆ First Resending Time (PTAP)

Specifies the length of time that the PBX waits before starting to resend PTAP (Panasonic Telephony Administration Protocol) data.
To change the value displayed here, click **Common Settings** and set the desired value.

Value Range

500 × n (n=1–16) ms

◆ Resending Time Out (PTAP)

Specifies the length of time after which the PBX terminates resending PTAP (Panasonic Telephony Administration Protocol) data.
To change the value displayed here, click **Common Settings** and set the desired value.

Value Range

150–240 s

◆ First Resending Time (MGCP)

Specifies the length of time that the PBX waits before starting to resend MGCP (Media Gateway Control Protocol) data.
To change the value displayed here, click **Common Settings** and set the desired value.

Value Range

500 × n (n=1–8) ms

◆ Resending Time Out (MGCP)

Specifies the length of time after which the PBX terminates resending MGCP (Media Gateway Control Protocol) data.
To change the value displayed here, click **Common Settings** and set the desired value.

Value Range

75–120 s

◆ Echo Canceller Ability

Specifies the echo canceller ability time.

Value Range

OFF, 64 ms, 128 ms

◆ DSP Digital Gain (Down)

Specifies the DSP Digital Gain for the down voice path.

Value Range

-14–6 dB

◆ DSP Digital Gain (Up)

Specifies the DSP Digital Gain for the up voice path.

Value Range

-14–6 dB

◆ EC Gain

Specifies the Echo Canceller Gain.

Value Range

-14–6 dB

◆ NLP Setting

Specifies the NLP (Non-Linear Processor) setting to control echo sound quality.

Value Range

Disable, Weak, Normal, Strong

9.18 PBX Configuration—[1-1] Configuration—Slot—V-IPCS—Port Property

Various settings can be programmed for each virtual IP-CS port.

IP-CS Registration and De-registration

An IP-CS must be registered to the PBX by programming the PBX and IP-CS before it can be used.
Programming instructions for the PBX are given below.
It is possible to de-register the IP-CS later.
IP-CS Registration, De-registration, and Forced De-registration can be performed only in On-line mode.

◆ Preparation

Open **27.1 Network Service—[1] IP Address/Ports—Basic Settings**, and confirm that the IP addresses of the mother board and DSP card, subnet mask address, and default gateway address are set.

◆ Registration

Follow the steps below to register the IP-CS.

1. Connect the IP-CS to be registered to the network and, if necessary, the power supply.
2. Click **Registration**.
   A dialogue box will appear. Non-registered (available) IP-CSs are displayed on the left.
3. Highlight IP-CSs and click the right arrow to select them for registration. Click **Next**.
4. If the registration is still in progress, the dialogue box will show "Registration Executing".
   If the registration is successful, the dialogue box will show "Registration Completed". Click **Close**.
   Once the IP-CS is successfully registered, the status of the IP-CS will update to show "Registered".

◆ De-registration

Follow the steps below to de-register the IP-CS.

1. Click **De-registration**.
   A dialogue box will appear. Registered IP-CSs are displayed on the left.
2. Highlight IP-CSs and click the right arrow to select them for de-registration. Click **Next**.
   A dialogue box will appear.
3. Click **Confirm**.
   If the de-registration is successful, the dialogue box will show "De-registration Succeed".
4. Click **Close**.
   Once the IP-CS is successfully de-registered, the status of the IP-CS will update to show "None".

◆ Forced De-registration

Follow the steps below to forcibly de-register the IP-CS when normal de-registration has been unsuccessful or IP address settings have been changed or deleted only on the IP-CS.

1. Click **Forced De-registration**.
   A dialogue box will appear. Registered IP-CSs are displayed on the left.
2. Highlight IP-CSs and click the right arrow to select them for forced de-registration. Click **Next**.
   A dialogue box will appear.
3. Click **OK**.
   A dialogue box will appear.

4. Click **Confirm**.
   If the de-registration is successful, the dialogue box will show "Forced De-registration Succeed".
5. Click **Close**.
   Once the IP-CS is successfully de-registered, the status of the IP-CS will update to show "None".

Main

The **Shelf**, **Slot**, and **Port** for each item are displayed for your reference. For details, see **Common Programming Reference Items** in **9.1 PBX Configuration—[1-1] Configuration—Slot**.

◆ CS Name

Specifies the CS name of the port.

Value Range

Max. 20 characters

◆ Connection

Indicates the port status. To change the status of the port, click the desired cell in the column, and then select **INS** or **OUS** for the port.
This option is only available in On-line mode.

Value Range

INS: The port is in service.
OUS: The port is out of service.
Fault: The port is not communicating with the network.

◆ Status

Indicates whether a certain IP-CS is registered (reference only).

Value Range

None, Registered

◆ MAC Address

Indicates the MAC address of the IP-CS (reference only).

Value Range

00:00:00:00:00:00–FF:FF:FF:FF:FF:FF

◆ Current IP Address

Indicates the current IP address of the IP-CS (reference only).

Value Range

1.0.0.0–223.255.255.255

◆ Program Ver.

Indicates the programme software file version of the IP-CS (reference only).

Value Range

Version number

◆ Air Sync Group No

Assigns an Air Synchronisation Group number to the IP-CS.

Value Range

None, 1–16

PC Programming Manual References

19.3 PBX Configuration—[11-3] Maintenance—Air Synchronisation

Option

The **Shelf**, **Slot**, and **Port** for each item are displayed for your reference. For details, see **Common Programming Reference Items** in **9.1 PBX Configuration—[1-1] Configuration—Slot**.

◆ CS Name

Specifies the CS name of the port.

Value Range

Max. 20 characters

◆ Connection

Indicates the port status. To change the status of the port, click the desired cell in the column, and then select **INS** or **OUS** for the port.
This option is only available in On-line mode.

Value Range

INS: The port is in service.
OUS: The port is out of service.
Fault: The port is not communicating with the network.

◆ IP Codec Priority

Specifies the codec used for compression and decompression of transmitted data.

Value Range

G.711, G.729A

◆ Packet Sampling Time (G.711)

Specifies the time interval between measurements (samples) of sound data during a conversation.
The smaller this number, the higher the quality of the transmitted sound.

Value Range

20 ms, 30 ms, 40 ms, 50 ms, 60 ms

◆ Packet Sampling Time (G.729A)

Specifies the time interval between measurements (samples) of sound data during a conversation.
The smaller this number, the higher the quality of the transmitted sound.

Value Range

20 ms, 30 ms, 40 ms, 50 ms, 60 ms

◆ Voice Activity Detection for G.711

Enables the use of the Voice Activity Detection feature for the G.711 codec. This feature conserves bandwidth by detecting silent periods during a call and suppressing the packets of silence from being sent to the network.

Value Range

Disable, Enable

9.19 PBX Configuration—[1-1] Configuration—Slot—V-UTEXT—Card Property

Various settings can be programmed for V-UTEXT8 cards.
Click **Common Settings** to change these settings.

Main

◆ Echo Cancellation Ability

Specifies the echo canceller ability time.

Value Range
OFF, 24 ms, 128 ms

◆ DSP Digital Gain (Down)

Specifies the DSP Digital Gain for the down voice path.

Value Range
-14–6 dB

◆ DSP Digital Gain (Up)

Specifies the DSP Digital Gain for the up voice path.

Value Range
-14–6 dB

◆ EC Gain

Specifies the Echo Canceller Gain.

Value Range
-14–6 dB

◆ NLP Setting

Specifies the NLP (Non-Linear Processor) setting to control echo sound quality.

Value Range
Disable, Weak, Normal, Strong

◆ PERIODIC Inform

Specifies whether alive monitoring is performed for connected extensions.

Value Range
Enable, Disable

◆ PERIODIC Inform Interval

Specifies the polling interval for alive monitoring when ◆ **PERIODIC Inform** is set to "Enable".

Value Range

30–3600 s

◆ INFORM retransmission counter

Specifies the number of times the PERIODIC Inform is sent for extensions when attempting to establish a connection.

Value Range

2–10 times

◆ NTP Query Interval

Specifies the interval at which connected extensions poll the specified NTP server for a time update.

Value Range

1–24 hours

9.20 PBX Configuration—[1-1] Configuration—Slot—V-UTEXT—Port Property

Various settings can be programmed for the ports of V-UTEXT8 cards.

KX-UT Series SIP Phone Registration and De-registration

A KX-UT series SIP phone must be registered to the PBX by programming the PBX and SIP phone before it can be used.
Programming instructions for the PBX are given below.
It is possible to de-register the SIP phone later.
Registration, De-registration, and Forced De-registration can be performed only in On-line mode.

Note

KX-UT series SIP phones are not available in China.

◆ Preparation

Open **27.1 Network Service—[1] IP Address/Ports—Basic Settings**, and confirm that the IP addresses of the mother board and DSP card, subnet mask address, and default gateway address are set.

◆ Registration

Follow the steps below to register a SIP phone.

1. Connect the device to be registered to the network and, if necessary, the power supply.
2. Click **Registration**.
   A dialogue box will appear. Non-registered (available) extension numbers and names are displayed on the left.
3. Highlight numbers and names and click the right arrow to select them for registration. Click **Next**.
4. Click **Next**.
5. If the registration is still in progress, the dialogue box will show "Registration Executing".
   If the registration is successful, the dialogue box will show "Registration Completed". Click **Close**.
   Once the device is successfully registered, the status of the device will update to show "Registered".

◆ De-registration

Follow the steps below to de-register a SIP phone.

1. Click **De-registration**.
   A dialogue box will appear. Registered extension numbers and names are displayed on the left.
2. Highlight numbers and names and click the right arrow to select them for de-registration. Click **Next**.
   A dialogue box will appear.
3. Click **Confirm**.
   If the de-registration is successful, the dialogue box will show "De-registration Succeed".
4. Click **Close**.
   Once the device is successfully de-registered, the status of the device will update to show "None".

◆ Forced De-registration

Follow the steps below to forcibly de-register a SIP phone when normal de-registration has been unsuccessful or IP address settings have been changed or deleted only on the target device.

1. Click **Forced De-registration**.
   A dialogue box will appear. Registered extension numbers and names are displayed on the left.
2. Highlight numbers and names and click the right arrow to select them for forced de-registration. Click **Next**.
   A dialogue box will appear.
3. Click **OK**.
   A dialogue box will appear.
4. Click **Confirm**.
   If the de-registration is successful, the dialogue box will show "Forced De-registration Succeed".
5. Click **Close**.
   Once the device is successfully de-registered, the status of the device will update to show "None".

Main

The **Shelf**, **Slot**, and **Port** for each item are displayed for your reference. For details, see **Common Programming Reference Items** in **9.1 PBX Configuration—[1-1] Configuration—Slot**.

◆ Extension Number

Specifies the extension number of the port.

Value Range

Max. 5 digits (consisting of 0–9)

Feature Guide References

5.2.2 SIP (Session Initiation Protocol) Extension

◆ Extension Name

Specifies the extension name of the port.

Value Range

Max. 20 characters

Feature Guide References

5.2.2 SIP (Session Initiation Protocol) Extension

◆ Telephone Type

Specifies the connected device type.

Note

- This setting cannot be changed if a device has already been registered for the port. De-register the device set for the port before changing the setting.
- To change this setting when programming in Off-line mode, and a device is already registered to the port, change the setting of ◆ **IP Phone Registration ID (MAC Address)** for the port to "00:00:00:00:00:00", and then click **Apply**. The setting can then be changed.

Value Range

UT: A KX-UT series SIP phone is connected.

Feature Guide References

5.2.2 SIP (Session Initiation Protocol) Extension

◆ Connection

Indicates the port status. To change the status of the port, click the desired cell in the column, and then select **INS** or **OUS** for the port.
This option is only available in On-line mode.

Value Range

INS: The port is in service.
OUS: The port is out of service.
Fault: The port is not communicating with the network.

Feature Guide References

5.2.2 SIP (Session Initiation Protocol) Extension

◆ Password

Specifies the password used for registering a SIP phone to the PBX. This parameter can only be modified when the virtual SIP extension port is set to OUS.

Value Range

4–16 characters (consisting of 0–9, a–z, A–Z)

Feature Guide References

5.2.2 SIP (Session Initiation Protocol) Extension

◆ Status

Indicates whether a certain SIP phone is registered (reference only).

Value Range

None, Registered

Feature Guide References

5.2.2 SIP (Session Initiation Protocol) Extension

◆ IP Phone Registration ID (MAC Address)

Specifies the MAC address of the SIP phone.
This parameter can only be modified when **Connection** on this screen is set to **OUS**.

Value Range

00:00:00:00:00:00–FF:FF:FF:FF:FF:FF

Feature Guide References

5.2.2 SIP (Session Initiation Protocol) Extension

◆ Current IP Address

Indicates the current IP address of the SIP phone (reference only).

Value Range

1.0.0.0–223.255.255.255

Feature Guide References

5.2.2 SIP (Session Initiation Protocol) Extension

◆ Program Ver.

Indicates the programme software file version of the SIP phone (reference only).

Value Range

Version number

Feature Guide References

5.2.2 SIP (Session Initiation Protocol) Extension

◆ P2P Group

Specifies the peer-to-peer group.

Value Range

1–32

PC Programming Manual References

11.10 PBX Configuration—[3-10] Group—P2P Group

Feature Guide References

5.2.3 Peer-to-Peer (P2P) Connection

◆ P2P Group Name

Indicates the selected peer-to-peer group's name (reference only).

Value Range

P2P Group Name

PC Programming Manual References

11.10 PBX Configuration—[3-10] Group—P2P Group

Feature Guide References

5.2.3 Peer-to-Peer (P2P) Connection

Option

The **Shelf**, **Slot**, and **Port** for each item are displayed for your reference. For details, see **Common Programming Reference Items** in **9.1 PBX Configuration—[1-1] Configuration—Slot**.

◆ Extension Number

Specifies the extension number of the port.

Value Range

Max. 5 digits (consisting of 0–9)

◆ Extension Name

Specifies the extension name of the port.

Value Range

Max. 20 characters

◆ Connection

Indicates the port status. To change the status of the port, click the desired cell in the column, and then select **INS** or **OUS** for the port.
This option is only available in On-line mode.

Value Range

INS: The port is in service.
OUS: The port is out of service.
Fault: The port is not communicating with the network.

◆ System Speed Dial Download

Specifies if the connected SIP phone will download system speed dial entries from the PBX.

Value Range

Enable, Disable

PC Programming Manual References

9.2.1 PBX Configuration—[1-1] Configuration—Slot—System Property—Main—◆ System Speed Dial Download For UT Extensions

◆ SIP QoS-DSCP

Specifies the value in the ToS field by a DSCP for DiffServ.

Value Range

0–63

◆ RTP QoS-DSCP

Specifies the value in the ToS field by a DSCP for DiffServ.

Value Range

0–63

◆ UT Codec Priority - 1st—UT Codec Priority - 4th

Specifies the priority of the codecs to be used. **None** is only available for 2nd, 3rd, and 4th priorities.

Value Range

G.722, G711A, G.729A, G711Mu, None

◆ Packet Sampling Time

Specifies the time interval between measurements (samples) of sound data during a conversation. The smaller this number, the higher the quality of the transmitted sound.

Value Range

20 ms, 30 ms, 40 ms

◆ Jitter Buffer - Maximum Delay

Specifies the maximum size of the jitter buffer for voice communications.

Value Range

3–50 ms

◆ Jitter Buffer - Minimum Delay

Specifies the minimum size of the jitter buffer for voice communications.

Value Range

1–2 ms

◆ Jitter Buffer - Initial Delay

Specifies the initial size of the jitter buffer for voice communications.

Value Range

1–7 ms

◆ Gain Type

Specifies the type of gain file to distribute to connected SIP devices.

Value Range

Default, Type1, Type2, Type3

Remote Place

The settings on this screen are for programming the Simple Remote Connection feature for connecting SIP phones in remote locations to the PBX. For details and conditions regarding the use of this feature, refer to "5.2.2.1 Simple Remote Connection" in the Feature Guide.

The **Shelf**, **Slot**, and **Port** for each item are displayed for your reference. For details, see **Common Programming Reference Items** in **9.1 PBX Configuration—[1-1] Configuration—Slot**.

◆ Extension Number

Specifies the extension number of the port.

Value Range

Max. 5 digits (consisting of 0–9)

◆ Extension Name

Specifies the extension name of the port.

Value Range

Max. 20 characters

◆ Connection

Indicates the port status. To change the status of the port, click the desired cell in the column, and then select **INS** or **OUS** for the port.
This option is only available in On-line mode.

Value Range

INS: The port is in service.
OUS: The port is out of service.
Fault: The port is not communicating with the network.

◆ Phone Location

Specifies the type of extension connected to the port.

Value Range

Local: The extension is located on the same network as the PBX (standard configuration).
Remote (SBC): The extension is accessing the PBX remotely (Simple Remote Connection).
Remote (MRG): The extension is accessing the PBX remotely (use Media Relay Gateway).

Feature Guide References

5.2.2.1 Simple Remote Connection

◆ Web-MC Ability

Specifies whether the Web programming is allowed on the KX-UT series SIP phone connected to the port by enabling the Web port setting on the phone's menu. For details about Web programming for KX-UT series SIP phones, refer to the documentation of the phone.

Value Range

Enable, Disable

Feature Guide References

5.2.2.1 Simple Remote Connection

9.21 PBX Configuration—[1-1] Configuration—Slot—Extension—Card Property

The property for the extension cards can be specified.

◆ SLT Pulse Dial Mode

Selects the type of pulse dial transmission appropriate to your area.

Value Range

Normal, Sweden, New Zealand

◆ SLT Off Hook Time

Specifies the minimum length that a pulse dial sent from an SLT must be for the PBX to recognise it as an off-hook signal.

Value Range

8 × n (n=3–255) ms

◆ SLT Off Hook Guard Time

Specifies the length of guard time used for off-hook signals from SLTs, to prevent the PBX mistaking them for pulse dials.

Value Range

8 × n (n=12–63) ms

◆ SLT Pulse Maximum Break Width

Specifies the maximum length of the break signal in a pulse dial.

Value Range

8 × n (n=9–20) ms

◆ SLT Pulse Minimum Make Width

Specifies the minimum length of the make signal in a pulse dial.

Value Range

8 × n (n=1–5) ms

◆ SLT Flash Detection

Enables the PBX to detect the flash signal sent when an SLT user presses the hookswitch or the Flash/Recall button.

Value Range

Disable: The PBX disconnects the line to prevent placing the call on hold.
Enable: The PBX places the call on consultation hold.

Feature Guide References

2.13.3 Call Splitting

◆ Flash Timing - Min.

Specifies the minimum length that a signal sent from an SLT must be for the PBX to recognise it as a hookswitch flash signal.

Value Range

8 × n (n=3–63) ms

◆ Flash Timing - Range

Specifies the maximum length that a signal sent from an SLT can be for the PBX to recognise it as a hookswitch flash signal.

Value Range

8 × n (n=3–191) ms

◆ DTMF-R STD Detection Time

Specifies the minimum length that a DTMF tone must be for the PBX to recognise it as a DTMF tone.

Value Range

2 × n (n=1–31) ms

◆ SLT Power Supply

Selects the voltage that enables an SLT to activate the Message Waiting lamp. When an MCSLC card is installed, the value for this setting is fixed at "85 V".

Value Range

85 V, 145 V

Feature Guide References

2.20.1 Message Waiting

◆ APT/SLT Parallel Connection

Enables an SLT connected in parallel to an APT to ring with the APT for calls.

Value Range

Disable, Enable

Feature Guide References

2.11.10 Parallelled Telephone

◆ Ringing Start Mode of Extension Caller ID

Specifies the Ringing Start Mode of Extension Caller ID. Please consult your certified Panasonic dealer for more information.

Value Range

Mode 1: With Pre-ring signal
Mode 2: Without Pre-ring signal

9.22 PBX Configuration—[1-1] Configuration—Slot—Extension—Port Property

Various settings can be programmed for each extension port.
To view the total number of each type of extension connected, click **Port Type View**.
The **Shelf**, **Slot**, and **Port** for each item are displayed for your reference. For details, see **Common Programming Reference Items** in **9.1 PBX Configuration—[1-1] Configuration—Slot**.

Note

Other programming items that are displayed on this screen but not listed below are used only when programming extensions connected to an Expansion Unit.
For information about Expansion Units, see **9.32 PBX Configuration—[1-1] Configuration—Slot—Expansion Unit1/Expansion Unit2/Expansion Unit3**.

◆ Port Type

Indicates the port type (reference only).

Value Range

SLT/DPT/S-Hybrid/S-Hybrid(S-DPT)/S-Hybrid(SLT)/IP-EXT/SIP-MLT/SIP/ISDN/UM

◆ Telephone Type

Indicates the connected telephone type (reference only).

Value Range

APT/DPT/DSS/VM/ISDN-Extension/IP-PT/UT/SIP/SIP-CS/S-PS/CS/CS-M/CS-S1/CS-S2/CS-S3/No Connection/UNKNOWN

◆ Connection

Indicates the port status. To change the status of the port, click the desired cell in the column, and then select **INS** or **OUS** for the port.
This option is only available in On-line mode.

Value Range

INS: The port is in service.
OUS: The port is out of service.
Fault: The port is not communicating with the PBX.

◆ Extension Number

Specifies the extension number of the port.

Value Range

Max. 5 digits (consisting of 0–9)

◆ Extension Name

Specifies the extension name of the port.

Value Range

Max. 20 characters

◆ XDP Mode

Turns XDP mode on or off for the port. This setting is only available when Port Type on this screen is set to S-Hybrid.

Value Range

On: XDP enabled (The main telephone and sub telephone have different extension numbers. This is called XDP Mode.)
Off: XDP disabled (The main telephone and sub telephone both have the main telephone's extension number. This is called Parallel Mode.)

Feature Guide References

2.11.10 Parallelled Telephone
5.2.6 Extension Port Configuration

◆ Parallel Telephone Ringing

Specifies whether the sub telephone (SLT) rings at the same time as the main telephone (DPT) for an incoming call. This setting is only available when Port Type on this screen is set to S-Hybrid.

Value Range

Yes, No

Feature Guide References

2.11.10 Parallelled Telephone

◆ DPT Type—Type

Selects the port type.
To change the port type of an extension port, follow the steps below:

1. Set the status of the extension port to "OUS".
2. Change the port type of the extension port, then click Apply.
3. Set the status of the extension port to "INS".

When changing the port type of an extension port for which **Wireless XDP** has been set on the 12.1.1 PBX Configuration—[4-1-1] Extension—Wired Extension—Extension Settings screen, the **Wireless XDP** setting must be deleted first.
When changing the type of a port for which one or more SDN buttons are set (except when changing between PC Console and Telephone), all SDN buttons customised for that device will be deleted. When you attempt to apply the new settings, a warning message is displayed showing the slot and port number for which SDN buttons will be deleted. If you do not wish to delete SDN buttons for this port, click Cancel.

Value Range

Normal: For connecting a DPT or CS
DSS: For connecting a DSS Console (A maximum of 8 DSS Consoles can be connected to the PBX.)
VM(DPT): For connecting a Panasonic VPS through DPT Integration
PC Console: For connecting a PC Console (A maximum of 8 PC Consoles can be connected to the PBX.)

Feature Guide References

2.28.1 Voice Mail (VM) Group
2.26.1 Computer Telephony Integration (CTI)

◆ DPT Type—Location No.

Specifies the location number of the connected DSS Console or PC Console. This setting is only available when DPT Type—Type on this screen is set to DSS or PC Console.
Note that, depending on system traffic, there may be a limit to the number of PC Consoles that can be supported by a single DLC/DHLC card.
When changing the location number of a DSS Console for which one or more SDN buttons are set, all SDN buttons customised for that device will be deleted. When you attempt to apply the new settings, a warning message is displayed showing the slot and port number for which SDN buttons will be deleted. If you do not wish to delete SDN buttons for this port, click Cancel.

Value Range

1-8

Feature Guide References

2.26.1 Computer Telephony Integration (CTI)

◆ DPT Type—VM Unit No.

Selects the unit number of the connected VPS. This setting is only available when DPT Type—Type on this screen is set to VM(DPT).

Value Range

1-2

Feature Guide References

2.28.1 Voice Mail (VM) Group

◆ DPT Type—VM Port No.

Specifies the VM port number for the port. This setting is only available when DPT Type—Type on this screen is set to VM(DPT).

Value Range

1-12

Feature Guide References

2.28.1 Voice Mail (VM) Group

◆ DPT Type—Air Sync Group No

Assigns an Air Synchronisation Group number to the CS. This setting is only available when DPT Type—Type on this screen is set to Normal.

Value Range

None, 1

PC Programming Manual References

19.3 PBX Configuration—[11-3] Maintenance—Air Synchronisation

◆ Headset OFF/ON

Turns on or off the use of a headset with a DPT. This setting is only available when Port Type on this screen is set to DPT, DPT(S-DPT), S-Hybrid, or S-Hybrid(S-DPT).

Value Range

Headset OFF, Headset ON

Feature Guide References

2.11.4 Headset Operation

◆ C.Waiting with Headset

Selects the Call Waiting tone generating device when using a headset. This setting is only available when Port Type on this screen is set to DPT, DPT(S-DPT), S-Hybrid, or S-Hybrid(S-DPT). This setting is displayed when "Headset ON" is selected for Headset OFF/ON.

Value Range

PT Tone, Headset

◆ Ringing Tone

Selects the dual-tone switching pattern of the ring tone for incoming calls when Port Type on this screen is set to DPT, DPT(S-DPT), S-Hybrid, S-Hybrid(SLT), or S-Hybrid(S-DPT). This setting is not available for the APTs, or SLTs.

Value Range

A: 64 ms (697 Hz), 64 ms (852 Hz)
B: 32 ms (697 Hz), 32 ms (852 Hz)
C: 128 ms (697 Hz), 128 ms (852 Hz)
D: 32 ms (697 Hz), 96 ms (852 Hz)

9.23 PBX Configuration—[1-1] Configuration—Slot—Card Property - LCO type

The properties of the analogue trunk cards can be specified.

◆ Outgoing Guard Time

Specifies the length of time after a trunk is disconnected, during which the PBX cannot seize the line.

Value Range

3–6 s

◆ First Dial Timer (CO)

Specifies the minimum time that the PBX waits after seizing a trunk, before sending the dialled digits to the telephone company. This allows the telephone company to have enough time to accept the dialled digits correctly.

Value Range

0.5 × n (n=1–16) s

◆ CO Feed Back Tone

Specifies whether the pulse feedback tone is turned on or not. For outgoing trunk calls, audible tones can be heard as the dialled number is sent out, which informs the extension user that the number has been dialled.

Value Range

No, Yes

◆ Bell Detection—Bell Start Detection Timer

Specifies the minimum length of a bell signal that can be recognised by the PBX as the bell signal sent from the telephone company, before the PBX detects an arriving call.

Value Range

24 × n (n=1–50) ms

◆ Bell Detection—Bell Off Detection Timer

Specifies the duration of the bell off detection timer. If the PBX receives no bell signal from the telephone company for the length of time specified here, the PBX treats the call as lost.

Value Range

1.0 s–15.0 s

◆ Pulse / DTMF Dial—DTMF Inter-digit Pause

Specifies the length of the DTMF inter-digit pause. This allows the telephone company to have enough time to accept the dialled digits correctly.

Value Range

64 + 16 × n (n=0–11) ms

◆ Pulse / DTMF Dial—Pulse Inter-digit Pause

Specifies the length of the pulse inter-digit pause. This allows the telephone company to have enough time to accept the dialled digits correctly.

Value Range

630 ms, 830 ms, 1030 ms

◆ Low Speed Pulse Dial—Pulse % Break

Specifies the % break for a low speed pulse dial. This is the ratio between the break (on-hook) signal and make (off-hook) signal in a pulse dial.

Value Range

Other, 60%, 67%

PC Programming Manual References

9.24 PBX Configuration—[1-1] Configuration—Slot—Port Property - LCO Port

◆ Low Speed Pulse Dial—Break Width

Specifies the maximum length of the break signal in a low speed pulse dial. ◆ **Low Speed Pulse Dial—Pulse % Break** on this screen determines the value that can be specified here.

Value Range

20 + (4 × n) (n=1–15) ms

PC Programming Manual References

9.24 PBX Configuration—[1-1] Configuration—Slot—Port Property - LCO Port

◆ Low Speed Pulse Dial—Make Width

Specifies the minimum length of the make signal in a low speed pulse dial. ◆ Low Speed Pulse Dial—Pulse % Break on this screen determines the value that can be specified here.

Value Range

4 × n (n=3–15) ms

PC Programming Manual References

9.24 PBX Configuration—[1-1] Configuration—Slot—Port Property - LCO Port

◆ High Speed Pulse Dial—Pulse % Break

Specifies the % break for a high speed pulse dial. This is the ratio between the break (on-hook) signal and make (off-hook) signal in a pulse dial.

Value Range

Other, 60%, 67%

PC Programming Manual References

9.24 PBX Configuration—[1-1] Configuration—Slot—Port Property - LCO Port

◆ High Speed Pulse Dial—Break Width

Specifies the maximum length of the break signal in a high speed pulse dial. ◆ **High Speed Pulse Dial—Pulse % Break** on this screen determines the value that can be specified here.

Value Range

12+ (4 × n) (n=1–15) ms

PC Programming Manual References

9.24 PBX Configuration—[1-1] Configuration—Slot—Port Property - LCO Port

◆ High Speed Pulse Dial—Make Width

Specifies the minimum length of the make signal in a high speed pulse dial. ◆ **High Speed Pulse Dial—Pulse % Break** on this screen determines the value that can be specified here.

Value Range

4 × n (n=3–15) ms

PC Programming Manual References

9.24 PBX Configuration—[1-1] Configuration—Slot—Port Property - LCO Port

◆ Pulse Type

Selects the type of pulse dial transmission appropriate to your area.

Value Range

Normal, Sweden, New Zealand

◆ Option Card Equipment—Option 1 and Option 2

Indicates the type of the card that is installed on the LCOT card (reference only).

Value Range

None, Caller ID Card

PC Programming Manual References

9.24 PBX Configuration—[1-1] Configuration—Slot—Port Property - LCO Port—◆ Caller ID Detection

Feature Guide References

2.19.1 Caller ID

◆ Caller ID—Caller ID Signalling

Selects the type of Caller ID signalling provided by the telephone company.

Value Range

FSK, FSK (with Visual Caller ID), DTMF

Feature Guide References

2.19.1 Caller ID

◆ Caller ID—Max Receive Time

Specifies the maximum number of Caller ID series that are sent from the network.

Value Range

0 (no limit), 1, 2, 3

Feature Guide References

2.19.1 Caller ID

◆ Caller ID—Caller ID (FSK) Carrier Detection

Enables the PBX to detect the carrier when receiving Caller ID. To enable this setting, ◆ **Caller ID—Caller ID Signalling** on this screen should be set to **FSK**.

Value Range

Disable, Enable

Feature Guide References

2.19.1 Caller ID

◆ Caller ID—Caller ID (FSK) END Detection

Selects the method used to detect the end of Caller ID information.

Value Range

Length + Timer, Timer

Feature Guide References

2.19.1 Caller ID

◆ Caller ID—Caller ID (FSK) Header Examination

Enables the PBX to check the header of received Caller ID information. To enable this setting, ◆ **Caller ID—Caller ID Signalling** on this screen should be set to **FSK**.

Value Range

Disable, Enable

Feature Guide References

2.19.1 Caller ID

◆ Caller ID—Caller ID (FSK) Detection Start Timer

Specifies the length of time that the PBX waits before attempting to detect Caller ID information, after receiving a call. To enable this setting, ◆ **Caller ID—Caller ID Signalling** on this screen should be set to **FSK**.

Value Range

None, 80 × n (n=1–15) ms

Feature Guide References

2.19.1 Caller ID

◆ Caller ID—Caller ID (FSK) Detection Timer

Specifies the total time required by the PBX to detect Caller ID information. To enable this setting, ◆ **Caller ID—Caller ID Signalling** on this screen should be set to **FSK**.

Value Range

1040 + (80 × n) (n=0–37) ms

Feature Guide References

2.19.1 Caller ID

◆ Caller ID—Caller ID (DTMF) Start Code 1 and Start Code 2

Selects the DTMF code used to detect the beginning of a Caller ID series. Start Code 1 is prior to Start Code 2.

Value Range

None, *, #, A, B, C, D

Feature Guide References

2.19.1 Caller ID

◆ Caller ID—Caller ID (DTMF) Information Start Code

Selects the DTMF code used to detect the beginning of the information segment of a Caller ID series.

Value Range

None, *, #, A, B, C, D

Feature Guide References

2.19.1 Caller ID

◆ Caller ID—Caller ID (DTMF) End Code

Selects the DTMF code used to detect the end of a Caller ID series.

Value Range

None, *, #, A, B, C, D

Feature Guide References

2.19.1 Caller ID

◆ Caller ID—Caller ID (DTMF) Information Code-PRIVATE, OUT OF AREA, TECHNICAL REASON, UNKNOWN NUMBER, RESTRICTED NUMBER

Specifies the number used to identify each type of information code.

Value Range

Max. 16 digits (consisting of 0–9, *, and #)

Feature Guide References

2.19.1 Caller ID

◆ Caller ID—Caller ID Header[03]

Selects the type of the 3rd header in a Caller ID signal.

Value Range

DDN, Caller ID

Feature Guide References

2.19.1 Caller ID

9.24 PBX Configuration—[1-1] Configuration—Slot—Port Property - LCO Port

Various settings can be programmed for each analogue trunk port.
The **Shelf**, **Slot**, and **Port** for each item are displayed for your reference. For details, see **Common Programming Reference Items** in **9.1 PBX Configuration—[1-1] Configuration—Slot**.

◆ Port Type

Select to use the port with either the **CO**, **MOH**, or **External Pager** features. (Only LCOT6 is installed by default.)
2 ports, an odd and an even port, are programmed in a pair.

Value Range

CO, MOH, External Pager

Installation Manual References

4.3.4 LCOT6 in KX-NS300 (installed by default)

◆ Connection

Indicates the port status. To change the status of the port, click the desired cell in the column, and then select **INS** or **OUS** for the port.
This option is only available in On-line mode.
This option can only be changed when **CO** is selected for the Port Type.

Value Range

INS: The port is in service.
OUS: The port is out of service.

◆ Busy Out Status

Indicates the Busy Out status (reference only).

Value Range

Normal, Busy Out

Feature Guide References

2.5.4.6 Trunk Busy Out

◆ Dialling Mode

Selects the type of signal used to dial out to the analogue trunk.

Value Range

DTMF, Pulse

Feature Guide References

2.5.4.4 Dial Type Selection

◆ CPC Signal Detection Time—Outgoing, Incoming

Specifies the length of time required by the PBX to detect a CPC signal on outgoing or incoming trunk calls before disconnecting the line. When **None** is selected here, the line will not be disconnected when a CPC signal is not detected.

Value Range

None, 6.5 ms, 8 × n (n=1–112) ms

Feature Guide References

2.11.9 Calling Party Control (CPC) Signal Detection

◆ DTMF Width

Selects the length of the DTMF tone sent to the analogue trunk.

Value Range

80 ms, 160 ms

◆ Pulse Speed

Selects the speed at which pulse dials are sent to the analogue trunk.

Value Range

Low, High

◆ Reverse Detection

Selects the type of trunk call for which the reverse signal from the telephone company is detected.

Value Range

Disable: For no trunk call
Outgoing: For outgoing trunk calls only
Both Call: For both outgoing and incoming trunk calls

Feature Guide References

2.5.4.5 Reverse Circuit

◆ Caller ID Detection

Enables the PBX to detect a Caller ID signal from the analogue trunk.

Value Range

Disable, Enable

PC Programming Manual References

9.23 PBX Configuration—[1-1] Configuration—Slot—Card Property - LCO type

Feature Guide References

2.19.1 Caller ID

◆ Pause Time

Specifies the length of a pause.

Value Range

1.5 s, 2.5 s, 3.5 s, 4.5 s

Feature Guide References

2.5.4.7 Pause Insertion
2.5.4.8 Host PBX Access Code (Access Code to the Telephone Company from a Host PBX)
2.5.4.9 Special Carrier Access Code

◆ Flash Time

Specifies the length of a flash signal.

Value Range

None, 16 × n (n=1–255) ms

Feature Guide References

2.11.7 External Feature Access (EFA)

◆ Disconnect Time

Specifies the length of time after a trunk is disconnected, during which the PBX cannot seize the line.

Value Range

0.5 s, 1.5 s, 2.0 s, 4.0 s, 12.0 s

Feature Guide References

2.11.6 Flash/Recall/Terminate

9.25 PBX Configuration—[1-1] Configuration—Slot—Card Property - PRI type

The properties of the PRI card can be specified.

◆ ISDN CO / QSIG Master / QSIG Slave—T200

Specifies the maximum time that the PBX waits for a reply after sending the L2 command to ISDN.

Value Range

0–600 × 100 ms

◆ ISDN CO / QSIG Master / QSIG Slave—T202

Specifies the maximum time that the PBX waits for a reply after resending the request to use an ISDN line as a TIE line.

Value Range

0–600 × 100 ms

Feature Guide References

4.2.1 TIE Line Service

◆ ISDN CO / QSIG Master / QSIG Slave—T203

Specifies the length of time to detect no communication status of L2.

Value Range

0–600 × 100 ms

◆ ISDN CO / QSIG Master / QSIG Slave—T301

Specifies the maximum time that the PBX waits for a reply after making a call to ISDN.

Value Range

0–18000 × 100 ms

◆ ISDN CO / QSIG Master / QSIG Slave—T302

Specifies the maximum time allowed between each digit on an incoming call. Applies to overlap receiving.

Value Range

0–600 × 100 ms

◆ ISDN CO / QSIG Master / QSIG Slave—T303

Specifies the maximum time that the PBX waits for a reply after sending the SETUP (call setting) message to ISDN.

Value Range

0–600 × 100 ms

◆ ISDN CO / QSIG Master / QSIG Slave—T304

Specifies the maximum time allowed between each digit on an outgoing call. Applies to overlap sending.

Value Range

0–3000 × 100 ms

◆ ISDN CO / QSIG Master / QSIG Slave—T305

Specifies the maximum time that the PBX waits for a reply after sending the DISC (disconnection) message to ISDN.

Value Range

0–3000 × 100 ms

◆ ISDN CO / QSIG Master / QSIG Slave—T308

Specifies the maximum time that the PBX waits for a reply after receiving the Release message from ISDN.

Value Range

0–600 × 100 ms

◆ ISDN CO / QSIG Master / QSIG Slave—T309

Specifies the length of time that the PBX tries to disconnect the data link, before disconnecting the call.

Value Range

0–3000 × 100 ms

◆ ISDN CO / QSIG Master / QSIG Slave—T310

Specifies the maximum time that the PBX waits for a continuance message after receiving the Incoming Call Proceeding message.

Value Range

0–3000 × 100 ms

◆ ISDN CO / QSIG Master / QSIG Slave—T313

Specifies the maximum time that the PBX waits for a reply after sending the Connect message.

Value Range

0–600 × 100 ms

◆ ISDN CO / QSIG Master / QSIG Slave—T316

Specifies the maximum time that the PBX waits for a reply after sending the Restart message.

Value Range

0–3000 × 100 ms

◆ ISDN CO / QSIG Master / QSIG Slave—T318

Specifies the maximum time that the PBX waits for a reply after sending the Resume message.

Value Range

0–600 × 100 ms

◆ ISDN CO / QSIG Master / QSIG Slave—T319

Specifies the maximum time that the PBX waits for a reply after sending the Suspend message.

Value Range

0–600 × 100 ms

◆ ISDN CO / QSIG Master / QSIG Slave—T322

Specifies the maximum time that the PBX waits for a reply after sending the Status enquiry message.

Value Range

0–600 × 100 ms

◆ ISDN CO / QSIG Master / QSIG Slave—T3D3

Specifies the length of time that the PBX tries to establish L2 in "Permanent" mode.

Value Range

0–3000 × 100 ms

◆ ISDN CO / QSIG Master / QSIG Slave—T3D9

Specifies the length of time that the PBX tries to disconnect L2 in "Call by Call" mode.

Value Range

0–3000 × 100 ms

◆ ISDN Extension—T200

Specifies the maximum time that the PBX waits for a reply after sending the L2 command to ISDN.

Value Range

0–600 × 100 ms

◆ ISDN Extension—T201

Specifies the maximum time that the PBX waits for a reply after resending the TEI check request to ISDN.

Value Range

0–600 × 100 ms

◆ ISDN Extension—T203

Specifies the length of time to detect no communication status of L2.

Value Range

0–600 × 100 ms

◆ ISDN Extension—T301

Specifies the maximum time that the PBX waits for a reply after making a call to ISDN.

Value Range

0–18000 × 100 ms

◆ ISDN Extension—T302

Specifies the maximum time allowed between each digit on an incoming call. Applies to overlap receiving.

Value Range

0–600 × 100 ms

◆ ISDN Extension—T303

Specifies the maximum time that the PBX waits for a reply after sending the SETUP (call setting) message to ISDN.

Value Range

0–600 × 100 ms

◆ ISDN Extension—T304

Specifies the maximum time allowed between each digit on an outgoing call. Applies to overlap sending.

Value Range

0–3000 × 100 ms

◆ ISDN Extension—T305

Specifies the maximum time that the PBX waits for a reply after sending the DISC (disconnection) message to ISDN.

Value Range

0–3000 × 100 ms

◆ ISDN Extension—T306

Specifies the maximum time that the PBX waits for a reply after sending the DISC (disconnection) message to ISDN. This setting is used when inband tones are supplied.

Value Range

0–3000 × 100 ms

◆ ISDN Extension—T307

Specifies the maximum time that the PBX maintains a suspended call, before restarting.

Value Range

0–6000 × 100 ms

◆ ISDN Extension—T308

Specifies the maximum time that the PBX waits for a reply after receiving the Release message from ISDN.

Value Range

0–600 × 100 ms

◆ ISDN Extension—T309

Specifies the length of time that the PBX tries to disconnect the data link, before disconnecting the call.

Value Range

0–3000 × 100 ms

◆ ISDN Extension—T310

Specifies the maximum time that the PBX waits for a reply after receiving the Incoming Call Proceeding message.

Value Range

0–3000 × 100 ms

◆ ISDN Extension—T312

Specifies the maximum time that the PBX waits for a reply after sending the SETUP (call setting) message to ISDN.

Value Range

0–600 × 100 ms

◆ ISDN Extension—T316

Specifies the maximum time that the PBX waits for a reply after sending the Restart message.

Value Range

0–3000 × 100 ms

◆ ISDN Extension—T320

Specifies the maximum time that the PBX waits for packet protocol.

Value Range

0–3000 × 100 ms

◆ ISDN Extension—T322

Specifies the maximum time that the PBX waits for a reply after sending the Status enquiry message.

Value Range

0–600 × 100 ms

◆ ISDN Extension—T3D3

Specifies the length of time that the PBX tries to establish L2 in "Permanent" mode.

Value Range

0–3000 × 100 ms

◆ ISDN Extension—T3D9

Specifies the length of time that the PBX tries to disconnect L2 in "Call by Call" mode.

Value Range

0–3000 × 100 ms

9.26 PBX Configuration—[1-1] Configuration—Slot—Port Property - PRI Port

Various settings can be programmed for each PRI port.

Main

The **Shelf**, **Slot**, and **Port** for each item are displayed for your reference. For details, see **Common Programming Reference Items** in **9.1 PBX Configuration—[1-1] Configuration—Slot**.

◆ Port Type

Selects the port type.

Note

- Each ISDN connection in a QSIG network must have a master port on one PBX and a slave port on another PBX.
- ISDN extensions can belong to an incoming call distribution group or idle extension hunting group. In this case, an MSN can be assigned.

Value Range

CO: For connecting to public network
Extension: For connecting to extension
QSIG-Slave: For connecting to private network (slave port)
QSIG-Master: For connecting to private network (master port)

Feature Guide References

4.1.2.1 Integrated Services Digital Network (ISDN)—SUMMARY
4.2.4.1 QSIG Standard Features—SUMMARY

◆ Connection

Indicates the port status. To change the status of the port, click the desired cell in the column, and then select **INS** or **OUS** for the port.
This option is only available in On-line mode.

Value Range

INS: The port is in service.
OUS: The port is out of service.
Fault: The port is not communicating with the network.

◆ Status Message

Specifies whether the Status Message is sent to the network.

Value Range

No Transmission: Status Message is not sent.
When error detection (Mandatory): Send the Status Message when an error (Mandatory) is detected.
When error detection (Option / Mandatory): Send the Status Message when an error (Option or Mandatory) is detected.

◆ Status Receive

Selects what happens to a call when the Status Message from the network does not match the actual status of the call.

Value Range

Ignore: Ignore the Status Message from the network.
Disconnect: Disconnect the call.

◆ CRC4 Mode

Enables the use of CRC4 for error checking. CRC (Cyclic Redundancy Check) is an error checking control technique that uses a specific binary prime divisor that results in a unique remainder. It is usually a 16- to 32-bit character. (Assignable only when using the PRI30 card.)

Value Range

Disable, Enable

CO Setting

CO Setting parameters are not applicable to ports assigned as **Extension** in ◆ **Port Type**.
The **Shelf**, **Slot**, and **Port** for each item are displayed for your reference. For details, see **Common Programming Reference Items** in **9.1 PBX Configuration—[1-1] Configuration—Slot**.

◆ Port Type

Selects the port type.

Note

- Each ISDN connection in a QSIG network must have a master port on one PBX and a slave port on another PBX.
- ISDN extensions can belong to an incoming call distribution group or idle extension hunting group. In this case, an MSN can be assigned.

Value Range

CO: For connecting to public network
Extension: For connecting to extension
QSIG-Slave: For connecting to private network (slave port)
QSIG-Master: For connecting to private network (master port)

◆ Connection

Indicates the port status. To change the status of the port, click the desired cell in the column, and then select **INS** or **OUS** for the port.
This option is only available in On-line mode.

Value Range

INS: The port is in service.
OUS: The port is out of service.
Fault: The port is not communicating with the network.

◆ Subscriber Number

Specifies the number used as the CLIP number.

Value Range

Max. 16 digits (consisting of 0–9, *, and #)

Feature Guide References

4.1.2.2 Calling/Connected Line Identification Presentation (CLIP/COLP)

◆ Ringback Tone to Outside Caller

Enables the PBX to send a ringback tone to an outside caller when the network cannot send the tone.

Value Range

Disable, Enable

◆ ISDN Outgoing Call Type

Selects the method used to send dialled digits to the network.

Value Range

En-bloc: The PBX sends all of the dialled digits at once after the extension user completes dialling. The PBX recognises the end of dialling when (1) # is dialled, if programmed, (2) a pre-programmed telephone number is dialled, or (3) the inter-digit timer expires.
Overlap: The PBX sends dialled digits one at a time.

PC Programming Manual References

9.1 PBX Configuration—[1-1] Configuration—Slot
10.3 PBX Configuration—[2-3] System—Timers & Counters—Dial / IRNA / Recall / Tone—◆ Dial—Extension Inter-digit (s)
10.9 PBX Configuration—[2-9] System—System Options—Option 2—◆ ISDN en Bloc Dial—[#] as End of Dial for en Bloc mode
11.1.4 PBX Configuration—[3-1-4] Group—Trunk Group—Dialling Plan

Feature Guide References

4.1.2.1 Integrated Services Digital Network (ISDN)—SUMMARY

◆ ISDN Centrex

Enables the use of the telephone company's ISDN Centrex Service features.

Value Range

Disable, Enable

Feature Guide References

4.1.2.1 Integrated Services Digital Network (ISDN)—SUMMARY

◆ Networking Data Transfer

Enables transmission of extension status data to connected PBXs in a network. This setting is only available when ◆ **Port Type** on this screen has been set to **QSIG-Slave** or **QSIG-Master**.

Value Range

Off, On

PC Programming Manual References

Section 17 PBX Configuration—[9] Private Network

Feature Guide References

4.2.5.1 Network Direct Station Selection (NDSS)

Extension Setting

Extension Setting parameters are applicable only for the PRI extension port.
The **Shelf**, **Slot**, and **Port** for each item are displayed for your reference. For details, see **Common Programming Reference Items** in **9.1 PBX Configuration—[1-1] Configuration—Slot**.

◆ Port Type

Selects the type of the port.

Note

- Each ISDN connection in a QSIG network must have a master port on one PBX and a slave port on another PBX.
- ISDN extensions can belong to an incoming call distribution group or idle extension hunting group. In this case, an MSN can be assigned.

Value Range

CO: For connecting to public network
Extension: For connecting to extension
QSIG-Slave: For connecting to private network (slave port)
QSIG-Master: For connecting to private network (master port)

◆ Connection

Indicates the port status. To change the status of the port, click the desired cell in the column, and then select **INS** or **OUS** for the port.
This option is only available in On-line mode.

Value Range

INS: The port is in service.
OUS: The port is out of service.
Fault: The port is not communicating with the network.

◆ Ring Mode (ISDN MSN Last No. 0 or 00)

Selects the ring mode when receiving an incoming call with an MSN ending with "0" or "00".

Value Range

Ring All Extension for MSN: Ring all ISDN extensions that are addressed with MSN.
Ring AN Extension for MSN: Ring only one of the ISDN extensions that are addressed with MSN.

Feature Guide References

5.2.5.1 ISDN Extension

Network Configuration

The **Shelf**, **Slot**, and **Port** for each item are displayed for your reference. For details, see **Common Programming Reference Items** in **9.1 PBX Configuration—[1-1] Configuration—Slot**.

◆ Port Type

Selects the port type.

Note

- Each ISDN connection in a QSIG network must have a master port on one PBX and a slave port on another PBX.
- ISDN extensions can belong to an incoming call distribution group or idle extension hunting group. In this case, an MSN can be assigned.

Value Range

CO: For connecting to public network
Extension: For connecting to extension
QSIG-Slave: For connecting to private network (slave port)
QSIG-Master: For connecting to private network (master port)

◆ Connection

Indicates the port status. To change the status of the port, click the desired cell in the column, and then select **INS** or **OUS** for the port.
This option is only available in On-line mode.

Value Range

INS: The port is in service.
OUS: The port is out of service.
Fault: The port is not communicating with the network.

◆ Network Type

Selects the network type of the port.

Value Range

0–56
(2 UK (Domestic), 5 Netherlands, 6 SwissNET2, 7 SwissNET3, 8 Euro ISDN (Standard), 14 France (Domestic), 19 Finland, 20 Norway, 27 Australia, 51 US National ISDN 2)

Feature Guide References

4.1.2.1 Integrated Services Digital Network (ISDN)—SUMMARY

Network Numbering Plan

The **Shelf**, **Slot**, and **Port** for each item are displayed for your reference. For details, see **Common Programming Reference Items** in **9.1 PBX Configuration—[1-1] Configuration—Slot**.

◆ Port Type

Selects the port type.

Note

- Each ISDN connection in a QSIG network must have a master port on one PBX and a slave port on another PBX.
- ISDN extensions can belong to an incoming call distribution group or idle extension hunting group. In this case, an MSN can be assigned.

Value Range

CO: For connecting to public network
Extension: For connecting to extension
QSIG-Slave: For connecting to private network (slave port)
QSIG-Master: For connecting to private network (master port)

◆ Connection

Indicates the port status. To change the status of the port, click the desired cell in the column, and then select **INS** or **OUS** for the port.
This option is only available in On-line mode.

Value Range

INS: The port is in service.
OUS: The port is out of service.
Fault: The port is not communicating with the network.

◆ Trunk Property

Selects the trunk property of the port.

Value Range

Public: Public network
Private: Private Network
VPN: Virtual Private Network

Feature Guide References

4.2.1 TIE Line Service
4.2.3 ISDN Virtual Private Network (ISDN-VPN)

◆ Calling Party Number—Numbering Plan ID—Public, Private

Selects the numbering plan ID that applies to outgoing trunk calls routed through public and private networks.

Value Range

Unknown, ISDN-Telephony, National Standard, Private

◆ Calling Party Number—Type of Number—Public, Private

Selects the type of number that applies to outgoing trunk calls routed through public or private networks.

Value Range

Unknown, International, National, Network, Subscriber

◆ Called Party Number—Numbering Plan ID—Public, Private

Selects the numbering plan ID that applies to incoming trunk calls routed through public and private networks.

Value Range

Unknown, ISDN-Telephony, National Standard, Private

◆ Called Party Number—Type of Number—Public, Private

Selects the type of number that applies to incoming trunk calls routed through public and private networks.

Value Range

Unknown, International, National, Network, Subscriber

Supplementary Service

The **Shelf**, **Slot**, and **Port** for each item are displayed for your reference. For details, see **Common Programming Reference Items** in **9.1 PBX Configuration—[1-1] Configuration—Slot**.

◆ Port Type

Selects the port type.

Note

- Each ISDN connection in a QSIG network must have a master port on one PBX and a slave port on another PBX.
- ISDN extensions can belong to an incoming call distribution group or idle extension hunting group. In this case, an MSN can be assigned.

Value Range

CO: For connecting to public network
Extension: For connecting to extension
QSIG-Slave: For connecting to private network (slave port)
QSIG-Master: For connecting to private network (master port)

◆ Connection

Indicates the port status. To change the status of the port, click the desired cell in the column, and then select **INS** or **OUS** for the port.
This option is only available in On-line mode.

Value Range

INS: The port is in service.
OUS: The port is out of service.
Fault: The port is not communicating with the network.

◆ COLP, CLIR, COLR, CNIP, CONP, CNIR, CONR, CF (Rerouting), CT, CCBS, AOC-D, AOC-E, E911, 3PTY

Specifies whether each ISDN or QSIG supplementary service is used.
The available services depend on the setting of ◆ **Port Type** on this screen.

Value Range

For COLP, CLIR, COLR, CNIP, CONP, CNIR, CONR, CF (Rerouting), CT, CCBS, AOC-D, AOC-E, E911:
No, Yes

For 3PTY:
No, Yes-3Pty

Feature Guide References

4.1.2.2 Calling/Connected Line Identification Presentation (CLIP/COLP)
4.1.2.3 Advice of Charge (AOC)
4.1.2.4 Call Forwarding (CF)—by ISDN (P-P)
4.1.2.6 Call Transfer (CT)—by ISDN
4.1.2.7 Three-party Conference (3PTY)—by ISDN
4.1.2.9 Completion of Calls to Busy Subscriber (CCBS)
4.2.4.2 Calling/Connected Line Identification Presentation (CLIP/COLP) and Calling/Connected Name Identification Presentation (CNIP/CONP)—by QSIG
4.2.4.3 Call Forwarding (CF)—by QSIG
4.2.4.4 Call Transfer (CT)—by QSIG
4.2.4.5 Completion of Calls to Busy Subscriber (CCBS)—by QSIG

◆ CCBS Type

Selects the type of call from the network initiated by the CCBS (Completion of Calls to Busy Subscriber) feature, from which the specified number of digits are deleted.
◆ **CCBS Delete Digits** on this screen specifies the number of digits to delete from the received number.

Value Range

ALL, Unknown, International, National, Network specific, Subscriber, Abbreviated

Feature Guide References

4.1.2.9 Completion of Calls to Busy Subscriber (CCBS)

◆ CCBS Delete Digits

Specifies the number of digits to delete from the received number when receiving a call of the specified type initiated by the CCBS feature from the network. ◆ **CCBS Type** on this screen specifies the applicable type of call.

Value Range

0–15

Feature Guide References

4.1.2.9 Completion of Calls to Busy Subscriber (CCBS)

9.27 PBX Configuration—[1-1] Configuration—Slot—Card Property—E1 type

The properties of the E1 card can be specified.
To adjust related settings, click Line Signal Setting, MFC-R2 Setting 1, and MFC-R2 Setting 2.

◆ Line Coding

Selects the line coding type of E1 PCM (Pulse Code Modulation) for the E1 card.

Value Range

HDB3, AMI

◆ Frame Sequence

Selects the type of frame sequence for the E1 card.

Value Range

PCM30, PCM30-CRC

◆ Frame Option

Selects the value for C-bit and D-bit.

Value Range

C=A, D=B; C=0, D=0; C=0, D=1; C=1, D=0; C=1, D=1

◆ First Dial Timer (TIE)

Specifies the minimum time that the PBX waits after seizing a DDI/DID or TIE line, before sending the dialled digits to the telephone company or to another PBX. This allows the telephone company or the other PBX to have enough time to accept the dialled digits correctly..

Value Range

32 x n (n=1–255) ms

◆ Answer Detection Timer

Specifies the length of time required by the PBX to recognise the answer signal. This allows the telephone company to have enough time to accept the dialled digits correctly.

Value Range

32 x n (n=1–255) ms

◆ Seizure ACK Wait Timer

Specifies the length of time that the PBX waits for the seizure ACK signal.

Value Range

0.5 x n (n=1–20) s

◆ LIU Send Option

Indicates the transmitting level (Transmit Pulse Amplitude) of LIU (reference only).

Value Range

Mode 1-Mode 8

◆ LIU Receive Option

Selects the receiving level (Receive Equalisation) of LIU.

Value Range

Automatic, 6 dB, 12 dB, 18 dB, 24 dB

◆ RAI Signal Detection Mode

Selects the RAI signal detection mode.

Value Range

Type1, Type2

◆ DTMF Tone—DTMF Inter-digit Pause

Specifies the length of the DTMF inter-digit pause.

Value Range

64 + 16 x n (n=0–11) ms

9.28 PBX Configuration—[1-1] Configuration—Slot—Card Property—E1 type Line Signal Setting

◆ DR2 Setting Type

Selects the control type of the DR2 (Digital System R2) signal.

Value Range

Normal, Option 1, Option 3

◆ Inter-digit Timer

Specifies the pseudo-answer time. This setting is available only when Option 1 or Option 3 is selected in **DR2 Setting Type** on this screen..

Value Range

3-15

◆ Bit Position for Dial Pulse

Selects the position of the pulse dial control bit in a DR2 signal.

Value Range

A-bit, B-bit

◆ Bit Position for Clear Back

Selects the position of the clear-back signal control bit in a DR2 signal.

Value Range

A-bit, B-bit, A&B-bit

◆ Forced Release

Enables the PBX to send a forced release signal.

Value Range

Disable, Enable

◆ Forced Release Pattern

Selects the bit pattern for a forced release signal.

Value Range

A=0/B=0, A=0/B=1, A=1/B=0, A=1/B=1

◆ Meter Pulse Detection—Mode

Specifies the mode for call charge meter pulses.

Value Range

No Detection: Meter pulses are not sent or received.
Outgoing call only: Sends a call charge meter pulse for outgoing trunk calls.
Both calls: Sends and receives call charge meter pulses.

Feature Guide References

2.29.1 E1 Line Service

◆ Meter Pulse Detection—Bit Position

Specifies the bit position of a call charge meter pulse.

Value Range

A-bit, B-bit, C-bit, D-bit

Feature Guide References

2.29.1 E1 Line Service

◆ Meter Pulse Detection—Length

Specifies the length that a call charge meter pulse must be for the PBX to recognise it as a call charge meter pulse.

Value Range

8 × n (n=1–80) ms

Feature Guide References

2.29.1 E1 Line Service

◆ DSP Gain Adjustment—DTMF Transmit

Specifies the output power of the DTMF signal sent from the DSP (Digital Signal Processor).

Value Range

-12 dB–3 dB

◆ DSP Gain Adjustment—DTMF Receive

Specifies the strength range within which a DTMF signal must be for the DSP to recognise it as a DTMF signal.

Value Range

-42 - 0 dB – -11- 0 dB

◆ DSP Gain Adjustment—MFC-R2 Transmit

Specifies the output power of MFC-R2 signals sent from the DSP.

Value Range

-31 dB–0 dB

◆ DSP Gain Adjustment—MFC-R2 Receive

Specifies the strength range within which an MFC-R2 signal must be for the DSP to recognise it as an MFC-R2 signal.

Value Range

-38 - 0 dB – -23 - 0 dB

◆ Frame Error Detection—Error Detection

Specifies whether the PBX detects frame synchronisation errors.

Value Range

No, Yes

◆ Frame Error Detection—Error Rate

Specifies the number of frame errors per second which the PBX needs to recognise a remote alarm. To enable this setting, **Frame Error Detection—Error Detection** on this screen should be set to Yes.

Value Range

No limit, 16 x n (n=1–7) errors/s

9.29 PBX Configuration—[1-1] Configuration—Slot—Card Property—E1 type MFC-R2 Setting 1

◆ ANI Service—Mode

Selects the ANI (Automatic Number Identification) service mode.

Value Range

None: ANI service is not activated.
Incoming call only: Receives the caller's number from the E1 line.
Outgoing call only: Sends the caller's number to the E1 line.
Both calls: Sends and receives the caller's number through the E1 line.

◆ ANI Service—ANI Max. digits

Specifies the maximum number of digits to be received via ANI when receiving a call with ANI.

Value Range

None, 1–16

◆ MFC-R2 Timer—Forward

Specifies the maximum time that the PBX waits for an MFC-R2 forward signal sent from the telephone company.

Value Range

1–30 s

◆ MFC-R2 Timer—Backward

Specifies the maximum time that the PBX waits for an MFC-R2 backward signal sent from the telephone company.

Value Range

1–30 s

◆ MFC-R2 Timer—Disappearance

Specifies the maximum time that the PBX waits for an MFC-R2 disappearance signal sent from the telephone company.

Value Range

1–30 s

◆ Group-I Code Assignment—ANI Start

Specifies the code used to indicate the beginning of an ANI number.

Value Range

Undefined, 1–15

◆ Group-I Code Assignment—ANI Complete (1)(4)

Specifies the code used to indicate the end of an ANI number.

Value Range

ANI Complete (1): 1–15
ANI Complete (2)–(4): Undefined, 1–15

◆ Group-I Code Assignment—ANI Reject

Specifies the code used to reject an ANI number.

Value Range

1–15

◆ Group-I Code Assignment—End of Digit

Specifies the code used to recognise the end of each digit in an ANI number.

Value Range

Undefined, 1–15

◆ Group-I Code Assignment—End of Digit Timer

Specifies the length of time that the PBX waits for further signal before detecting the end of digit of an ANI number.

Value Range

1–15

◆ Group-I Code Assignment—G-II Code Outgoing Call

Specifies the code for sending Group-II code to the telephone company.

Value Range

1–15

◆ Group-I Code Assignment—G-II Code Incoming Call [1][15]

Specifies the destination of incoming trunk calls for each Group-II code respectively.

Value Range

Undefined, Subscriber, Operator, Collect Call

◆ Group-I Code Assignment—Group-II ANI

Specifies the Group-II ANI start code.

Value Range

1–15

◆ MFC-R2 Group-1[*][#]—E1 MFC-R2 Group1[*] code

Specifies the code value of the Group-1 code when the received Group-1 code is [*].

Value Range

11–15

◆ MFC-R2 Group-1[*][#]—E1 MFC-R2 Group1[#] code

Specifies the code value of the Group-1 code when the received Group-1 code is [#].

Value Range

11–15

9.30 PBX Configuration—[1-1] Configuration—Slot—Card Property—E1 type MFC-R2 Setting 2

◆ Group-A Code Assignment—Address Complete

Specifies the address complete (completion of dial reception) code sent to the telephone company.

Value Range

1–15

◆ Group-A Code Assignment—ANI Request

Specifies the code used to request the telephone company to send an ANI number.

Value Range

1–15

◆ Group-A Code Assignment—ANI (N+1)

Specifies the code used to request the telephone company to send the (N+1)th digit of an ANI number.

Value Range

1–15

◆ Group-A Code Assignment—ANI (N+1) Additional Code

Specifies the second code when two codes are needed to request the telephone company to send the (N+1)th digit of an ANI number.

Value Range

Undefined, 1–15

◆ Group-A Code Assignment—Set up Speech Path

Specifies the setup speech path code sent to the telephone company.

Value Range

Undefined, 1–15

◆ Group-A Code Assignment—(First) Request

Specifies the code used to request the telephone company to send the first digit of an ANI number.

Value Range

Undefined, 1–15

◆ Group-A Code Assignment—(N) Request

Specifies the code used to request the telephone company to send the (N)th digit of an ANI number.

Value Range

Undefined, 1–15

◆ Group-A Code Assignment—(N-1) Request

Specifies the code used to request the telephone company to send the (N-1)th digit of an ANI number.

Value Range

Undefined, 1–15

◆ Group-A Code Assignment—(N-2) Request

Specifies the code used to request the telephone company to send the (N-2)th digit of an ANI number.

Value Range

Undefined, 1–15

◆ Group-A Code Assignment—(N-3) Request

Specifies the code used to request the telephone company to send the (N-3)th digit of an ANI number.

Value Range

Undefined, 1–15

◆ Group-B Code Assignment—Idle (1)

Specifies the code used normally to inform the telephone company that the status of the called destination is idle.

Value Range

Undefined, 1–15

◆ Group-B Code Assignment—Idle (2)

Specifies the code used in special circumstances, such as an international call, to inform the telephone company that the status of the called destination is idle.

Value Range

Undefined, 1–15

◆ Group-B Code Assignment—Idle (3)

Specifies the code used to inform the telephone company that the status of the called destination is idle when the call is disconnected by the caller.

Value Range

Undefined, 1–15

◆ Group-B Code Assignment—Busy

Specifies the code used to inform the telephone company that the status of the called destination is busy.

Value Range

Undefined, 1–15

◆ Group-B Code Assignment—Unallocated

Specifies the code used to inform the telephone company that the received number is not defined.

Value Range

Undefined, 1–15

◆ Group-B Code Assignment—Congestion

Specifies the code used to inform the telephone company that the network is congested.

Value Range

Undefined, 1–15

◆ Group-B Code Assignment—Out-of-Service

Specifies the code used to inform the telephone company that the status of the called destination is out of service.

Value Range

Undefined, 1–15

◆ Group-B Code Assignment—No Billing

Specifies the code used to inform the telephone company that the call is not charged.

Value Range

Undefined, 1–15

◆ Group-B Code Assignment—Collect Call Reject

Specifies the code used to inform the telephone company that the collect call has been rejected.

Value Range

Undefined, 1–15

9.31 PBX Configuration—[1-1] Configuration—Slot—Port Property—E1 Port

Various settings can be programmed for each E1 channel. To change the status of ports, click Command.

◆ Shelf

Indicates the shelf position (reference only).

Value Range

Shelf number

◆ Slot

Indicates the slot position (reference only).

Value Range

Slot number

◆ CH

Indicates the channel number (reference only).

Value Range

channel number

◆ Connection

Indicates the channel status (reference only).
This column offers two ways to open the screen to select the channel command:

- Click the desired cell in the column.
- Select the desired cell in the column, and then click Command.

Value Range

INS: The channel is in service.
OUS: The channel is out of service.
Fault: The channel is not communicating with the network.

◆ Subscriber Number

Specifies the number used as the CLIP number.

Value Range

Max. 16 digits (consisting of 0–9, *, and #)

Feature Guide References

4.1.2.2 Calling/Connected Line Identification Presentation (CLIP/COLP)

◆ Channel Type

Selects the channel type.

Value Range

Undefined: Not assigned
DR2: Digital System R2

Feature Guide References

2.29.1 E1 Line Service

◆ Trunk Property

Selects the trunk property of the E&M channel.

Value Range

Public: Use the DIL/DDI/DID method to distribute incoming trunk calls.
Private: Use the TIE line service between two or more PBXs.

Feature Guide References

2.1.1.1 Incoming Trunk Call Features—SUMMARY
4.1.2.1 Integrated Services Digital Network (ISDN)—SUMMARY
4.2.1 TIE Line Service

◆ CO Dial Mode

Selects the type of signal used to dial out to a trunk.
If MFC-R2 is selected, the PBX (not the telephone company) sends a dial tone to the caller when making a trunk call using an E1 line.

Value Range

DTMF, MFC-R2

Feature Guide References

2.5.4.4 Dial Type Selection
2.29.1 E1 Line Service

◆ E1 Receiver Type

Selects the type of signal the PBX receives from the E1 line.
This should be set to MFC-R2 when receiving ANI (Automatic Number Identification) numbers from the E1 line.

Value Range

DTMF, MFC-R2, Undefined

Feature Guide References

2.29.1 E1 Line Service

◆ Receive Digits

Specifies the maximum number of digits to be received from a DDI/DID number when receiving a call with the DDI/DID number.

Value Range

0–15

◆ CPC Detection Time—Out, In

Specifies the length of time required by the PBX to detect a CPC signal on outgoing or incoming trunk calls before disconnecting the line. When None is selected here, the line will not be disconnected when a CPC signal is not detected.

Value Range

None, 80 x n (n=2–75) ms

Feature Guide References

2.11.9 Calling Party Control (CPC) Signal Detection

◆ DTMF Width

Selects the length of the DTMF tone sent to the E1 channel.

Value Range

80 ms, 160 ms

◆ Ringback Tone to Outside Caller

Enables the PBX to send a ringback tone to an outside caller when the network cannot send the tone.

Value Range

Disable, Enable

◆ Dial Tone to Extension

Enables the PBX to send a dial tone to an extension making a call when the network cannot send the tone.

Value Range

Disable, Enable

◆ Answer Wait Timer (*60s)

Selects the length of time that the PBX waits for the called outside party to answer an outgoing trunk call. The line will be disconnected automatically when this timer expires.

Value Range

None, 1–4

◆ Pause Time

Specifies the length of a pause.

Value Range

1.5 s, 2.5 s, 3.5 s, 4.5 s

Feature Guide References

2.5.4.7 Pause Insertion
2.5.4.8 Host PBX Access Code (Access Code to the Telephone Company from a Host PBX)
2.5.4.9 Special Carrier Access Code

◆ Flash Time

Specifies the length of a flash signal.

Value Range

None, 16 x n (n=1–255) ms

◆ Disconnect Time

Specifies the length of time after a trunk is disconnected, during which the PBX cannot seize the line.

Value Range

0.5 s, 1.5 s, 2.0 s, 4.0 s, 12.0 s

Feature Guide References

2.11.6 Flash/Recall/Terminate

9.32 PBX Configuration—[1-1] Configuration—Slot—Expansion Unit1/Expansion Unit2/Expansion Unit3

Settings for Expansion Units connected to the KX-NS300 over a stacking connection can be programmed. Click **Expansion Unit1**, **Expansion Unit2** or **Expansion Unit3** on the **Slot** screen to view the physical card shelf of the Expansion Unit.

Note

- Expansion Units must first be pre-installed before they can be programmed. For details, see **To pre-install PBXs connected to the EXP-M card** in **9.1 PBX Configuration—[1-1] Configuration—Slot**.
- For information about hardware configuration restrictions and conditions for Expansion Units, refer to **4.6 Expansion Card** in the Installation Manual.

To install a new physical card in an Expansion Unit

1. Click on the name of the card to install in the list on the right. An image of the card will be displayed, and information about the card will be shown.
2. Click and drag the image of the card to the slot, and release it. The card will move into the slot space.
3. Click **OK** to confirm.

To change the status (INS/OUS) of an Expansion Unit

1. Move the mouse pointer over the **Shelf Status** button. A menu will be shown under the mouse pointer.
2. Select the desired status:
   - Click **INS** to set the shelf to in-service status.
   - Click **OUS** to set the shelf to out-of-service status.

To remove an Expansion Unit from the EXP-M card

1. Move the mouse pointer over the **Shelf Status** button. A menu will be shown under the mouse pointer.
2. Click **Delete**. The Expansion Unit will be deleted from the system and the corresponding shelf button will become greyed out.

Note

The Expansion Unit must be set to OUS before it can be deleted.

Programming cards installed in an Expansion Unit

You can access the card properties and port properties of the physical cards installed in a Expansion Unit using the KX-NS300 Web Maintenance Console Interface. The settings, setting values, and other information is similar to programming using the Unified PC Maintenance Console. Refer to the PC Programming Manual of the Expansion Unit PBX for programming information.

Programming Card Properties for cards installed in Expansion Units

For your reference, the following information is included on each Card Property screen for cards installed in Expansion Units:

Shelf: The shelf number of the EXP-M card Expansion Unit connection:

- 2: Expansion Unit1

- 3: Expansion Unit2
- 4: Expansion Unit3

Slot: The physical slot number within the Expansion Unit where the card is installed.

Programming Port Properties for cards installed in Expansion Units

To change the status of a port when programming via Web Maintenance Console, click the desired cell in the **Connection** column, and then select **INS** or **OUS** for the port.

9.33 PBX Configuration—[1-1] Configuration—Slot—DOORPHONE Card—Card Property

The doorphone card's settings can be programmed.
The **Shelf**, **Slot**, and **Port** for each item are displayed for your reference. For details, see **Common Programming Reference Items** in **9.1 PBX Configuration—[1-1] Configuration—Slot**.

◆ Port Status

Specifies the port's status.
This option is only available in On-line mode.

Value Range

INS: The port is in service.
OUS: The port is out of service.
Fault: There is a communication error.

◆ For Output - Device Type

Selects the type of connected output device (for output ports only).

Value Range

Ringer, Relay, Door Opener

◆ For Sensor - Input Signal Decision Time

Specifies the minimum duration of continuous input from the triggered sensor before the PBX recognises the input and makes a sensor call.

Value Range

32 × n (n=2–255) ms

◆ For Sensor - Input Signal Detection Reopening Time

Specifies the length of time after the sensor has been triggered during which any further input from the sensor will be ignored.

Value Range

10 × n (n=1–255) s

9.34 PBX Configuration—[1-2] Configuration—Portable Station

Various portable station (PS) settings can be programmed.

PS Registration and De-registration

A PS must be registered to the PBX by programming both the PBX and PS before it can be used. Programming instructions of the PBX are given below; programming instructions of the PS are found in the Installation Manual.
It is possible to de-register the PS later.
PS Registration, De-registration, and Forced De-registration can be performed only in On-line mode.

◆ Registration

Follow the steps below to register the PS.

1. Click **Registration**.
   A dialogue box will appear. Non-registered (available) extension numbers and names are displayed on the left.
2. Highlight PBX sites and click the right arrow to select them for registration. Click **Next**.
3. If the registration is still in progress, the dialogue box will show "Registration Executing".
   If the registration is successful, the dialogue box will show "Registration Completed". Click **Close**.
   Once a PS is successfully registered, the status of the PS will update to show "Registered".

◆ De-registration

Follow the steps below to de-register the PS.

1. Click **De-registration**.
   A dialogue box will appear. Registered extension numbers and names are displayed on the left.
2. Highlight numbers and names and click the right arrow to select them for de-registration. Click **Next**.
   A dialogue box will appear.
3. Click **Confirm**.
   If the de-registration is successful, the dialogue box will show "De-registration Succeed".
4. Click **Close**.
   Once the PS is successfully de-registered, the status of the PS will update to show "None".

◆ Forced De-registration

Follow the steps below to forcibly de-register the PS when normal de-registration has been unsuccessful or de-registration has been performed only on the PS.

1. Click **Forced De-registration**.
   A dialogue box will appear. Registered extension numbers and names are displayed on the left.
2. Highlight numbers and names and click the right arrow to select them for forced de-registration. Click **Next**.
   A dialogue box will appear.
3. Click **OK**.
   A dialogue box will appear.
4. Click **Confirm**.
   If the de-registration is successful, the dialogue box will show "Forced De-registration Succeed".
5. Click **Close**.
   Once the PS is successfully de-registered, the status of the PS will update to show "None".

◆ Personal Identification Number

Specifies the Personal Identification Number (PIN) of the PBX, used to avoid registering a PS to the wrong PBX.
Note that the same PIN should be entered at the PS, before the PS is registered to the PBX.

Value Range

4 digits (consisting of 0–9)

◆ Index

Indicates the PS number (reference only).

Value Range

1–128

◆ Extension No.

Specifies the extension number of the PS.
In Wireless XDP Parallel Mode, the PS can be used as a sub telephone with a wired main telephone (PT/SLT), and two of them will share one extension number of the main telephone. However, note that the PS extension number specified here will not be altered by the extension number of the main telephone even if the PS is in Wireless XDP Parallel Mode.

Value Range

Max. 5 digits (consisting of 0–9)

◆ Extension Name

Specifies the name of the PS.

Value Range

Max. 20 characters

PC Programming Manual References

12.2.1 PBX Configuration—[4-2-1] Extension—Portable Station—Extension Settings—Main—◆ Extension Name

◆ Status

Indicates whether a certain PS is registered (reference only).

Value Range

None, Registered

9.35 PBX Configuration—[1-3] Configuration—Option

System options can be programmed.

◆ System Wireless—System ID

Indicates the radio system ID used to register a PS (reference only).

To clear the System ID

1. Click the **Clear Master CS** button.
2. A warning will be displayed. Confirm the contents of the warning, and then click **Yes**.

Note

The System ID can be cleared using this procedure only in Off-line mode.

Value Range

Not applicable.

◆ System Wireless—CO Status Display in Standby (KX-WT125 only) (Need System Restart)

Selects whether to display the CO status on the LCD of the PS when in stand-by mode (KX-WT125 only).

Value Range

Enable, Disable

◆ New Card Installation—Card Status for any Card

Selects the initial status of cards after installation.

Value Range

In Service, Out of Service

◆ New Card Installation—Automatic Extension Number Set for Extension Card

Selects whether extension numbers are assigned to extension ports automatically or manually.

Value Range

Disable, Enable

9.36 PBX Configuration—[1-4] Configuration—Clock Priority

◆ Shelf-Slot Number

Selects and prioritises slot numbers for PRI cards that are used to forward a clock pulse from an external source to the PBX.
Obtain the master clock time from the outside line that the telephone company provides.
To change Clock Priority, follow the steps below:

1. Assign a Clock Priority to each slot.
2. Set the status of the present clock source card to "**OUS**", then "**INS**".

Note

If multiple PBXs are used to establish a private network (TIE line service, QSIG network, etc.) without being connected through the telephone company, assign only one PBX as the clock source on the network. That PBX should have a card connected to a telephone company line selected as its clock source. All other PBXs should have cards connected to the network selected as the clock source. This enables all PBXs on the network to synchronise their timing.

Value Range

None, Shelf and Slot number
Shelf and slot numbers are listed using the pattern "X-Y":

- X: Shelf number (1–4)
  - 1: KX-NS300 basic unit
  - 2: Expansion Unit1
  - 3: Expansion Unit2
  - 4: Expansion Unit3
- Y: Slot number (1–7)

9.37 PBX Configuration—[1-5] Configuration—DSP Resource

IP communications that are handled by the PBX require DSP resources. DSP resources can be reserved for various functions of the PBX.
The DSP resource advisor is a tool that analyses the configuration and user requirements for the system in order to recommend which DSP card should be used. Click **DSP Resource Advisor** to access this feature. (See **9.37.1.1 PBX Configuration—[1-5-1] Configuration—DSP Resource—Setting—DSP Resource Advisor**.)

9.37.1 PBX Configuration—[1-5-1] Configuration—DSP Resource—Setting

Set the amount of DSP resources to reserve for each PBX function that uses DSP resources.

◆ Option DSP Power

Indicates the total amount of available DSP resources based on the installed DSP card (reference only).
The number of resources provided by each type of DSP card is as follows:

- DSP S card: 63

One DSP card can be installed on the mother board.
Because the system reserves 2 resources for internal system functions, the total amount of available resources indicated will be 2 less than the total resources of the installed card(s).

Value Range

Resource amount (3 digits)

Feature Guide References

5.5.4 DSP Resource Usage

◆ Option DSP

Indicates the type of the installed DSP card (reference only).

Value Range

DSP S

Feature Guide References

5.5.4 DSP Resource Usage

◆ Services—VoIP (G.711)

Specifies the number of simultaneous VoIP calls to reserve DSP resources for.

Value Range

0–506 VoIP calls

Feature Guide References

5.5.4 DSP Resource Usage

◆ Services—Unified message

Specifies the number of UM ports to reserve DSP resources for.

Value Range

0–25 ports (UM: 24 ports, Fax: 1 port)

Feature Guide References

5.5.4 DSP Resource Usage

◆ Services—Two-way Recording

Specifies the number of UM ports reserved in ◆ **Services—Unified message** to use for Two-way Recording.

Value Range

0–24 ports (cannot exceed the value set in ◆ **Services—Unified message**)

Feature Guide References

5.5.4 DSP Resource Usage

◆ Services—OGM

Specifies the number of OGM ports to reserve DSP resources for.

Value Range

0–64 ports

Feature Guide References

5.5.4 DSP Resource Usage

◆ Services—Conference trunk

Specifies the number of conference rooms to reserve DSP resources for.

Value Range

0–24 conference rooms

Feature Guide References

5.5.4 DSP Resource Usage

◆ Services—Free resources (G.711)

Indicates the amount of free DSP resources available to allocate (reference only).

Value Range

0–506 DSP resources

Feature Guide References

5.5.4 DSP Resource Usage

◆ Select a time to apply the set values

Specifies when the settings made on this screen are applied.

Note

Any calls being made that use DSP resources will be disconnected when setting values are changed and applied.

Value Range

- **Set**: Specify a date and time to apply the changes, and click **OK**. The changes will be applied at the specified date and time.
- **Apply now**: The changes are applied immediately. Click **OK** to apply the settings immediately.

9.37.1.1 PBX Configuration—[1-5-1] Configuration—DSP Resource—Setting—DSP Resource Advisor

The DSP Resource Advisor assists programmers in the allocation of DSP resources to various PBX functions.

1. Note the value of **Total Power**. This is the total capacity for allocating DSP resources, depending on the DSP card installed in the PBX.
2. In the **Ports** column, enter the number of ports to allocate to each PBX function.
3. For voice calls, it is useful to estimate how often each call function is used, as every extension or trunk is not in use all the time. In the **Busy Ratio (%)** column, specify the anticipated ratio of time the type of voice call function will be used.
4. As values are entered, the values in the **Power** column will increase to reflect the resource required for the input amounts. Likewise, the value for **Free resources (G.711)** will decrease.

   Note

   Click **Clear** to reset the input values and start again.
5. When all items are allocated, confirm that the amount of resources input does not exceed the value indicated in **Total Power**.
   - Click **Apply** to insert the specified allocation settings into the **DSP Resource—Setting** screen.
   - Click **Cancel** to return to the **DSP Resource—Setting** screen without making any changes.

For details, refer to "5.5.4.2 DSP Resource Advisor" in the Feature Guide.

9.37.2 PBX Configuration—[1-5-2] Configuration—DSP Resource—Usage

The Usage screen is a graphical display of DSP resource usage. This information is useful to analyse usage patterns over time to determine DSP resource needs and optimal configuration settings.
This screen can be accessed only in On-line mode.

- The graph displays DSP resource usage over time. The time frame displayed can be displayed in increments of 1 hour, 4 hours, or 24 hours. Up to 30 days of usage data can be stored.
- Only DSP resources that have been reserved in **9.37.1 PBX Configuration—[1-5-1] Configuration—DSP Resource—Setting** are displayed.

Section 10

PBX Configuration—[2] System

This section serves as reference operating instructions for the System menu of the PBX Configuration menu of the Setup screen of Web Maintenance Console.

10.1 PBX Configuration—[2-1] System—Date & Time

10.1.1 PBX Configuration—[2-1-1] System—Date & Time—Date & Time Setting

The date and time of the PBX can be programmed. The date and time will be shown on the display of extensions (e.g., PT, PS).
This screen can be accessed only in On-line mode.

◆ Date & Time

Indicates the current date and time. Values can be entered by clicking the parameter you want to change and typing the new value, or by clicking the up/down arrows beside the date and time.

Note

- When this setting is changed and applied, it may take between 1 minute and several hours (depending on the configuration of the PBX network) for all connected IP-PTs to reflect this change on their displays.
- At default settings, KX-UT series SIP phones synchronise to the PBX's date and time once every hour.

Value Range

Year: 2000–2035
Month: 01–12
Day: 01–31
Hour: 00–23
Minute: 00–59
Second: 00–59

10.1.2 PBX Configuration—[2-1-2] System—Date & Time—SNTP / Daylight Saving

Automatic clock adjustment and Summer time (daylight saving time) settings of the PBX can be programmed. Automatic clock adjustment can be performed using one of two methods, ISDN & Caller ID or SNTP (Simple Network Time Protocol).
To set Summer time, click **10.1.2.1 PBX Configuration—[2-1-2] System—Date & Time—SNTP / Daylight Saving—Daylight Saving**.

Note

The NTP server function of the PBX must be enabled for connected KX-UT series SIP phones to receive automatic time adjustment information from the PBX. See **27.2.4 Network Service—[2-5] Server Feature—NTP**.

◆ Automatic Time Adjustment

Enables the PBX to automatically adjust its clock every day according to the time information provided by the network.

Value Range

Disable, ISDN & Caller ID (FSK), SNTP

Feature Guide References

5.5.5 Automatic Setup

◆ SNTP—SNTP Server—IP Address

Specifies the IP address or host name of the SNTP server.

Value Range

1.0.0.0–223.255.255.255 (IP address), Max. 253 characters (host name)

Feature Guide References

5.5.5 Automatic Setup

◆ SNTP—SNTP Server—Port Number

Indicates the port number used for communication with an SNTP server (reference only).

Value Range

1–65535

Feature Guide References

5.5.5 Automatic Setup

◆ SNTP—Time Zone—Time Zone

Specifies your local UTC (Coordinated Universal Time) time zone using the up and down arrows.

Note

If KX-UT series SIP phones are connected to the PBX, and this setting is changed, they must be restarted for the new time zone setting to take effect.

Value Range

-14:00–+14:00

Feature Guide References

5.5.5 Automatic Setup

◆ SNTP—Time Zone—Time Zone for PC

Indicates the UTC (Coordinated Universal Time) time zone of the PC (reference only).

Value Range

-14:00–+14:00

Feature Guide References

5.5.5 Automatic Setup

10.1.2.1 PBX Configuration—[2-1-2] System—Date & Time—SNTP / Daylight Saving—Daylight Saving

Summer time can be programmed. Summer time sets the clock one hour forward at 2:00 AM on the start date, and one hour back at 2:00 AM on the end date. The start and end dates of a maximum of 20 different summer times can be programmed.

◆ Setting

Enables Summer time.

Value Range

Disable, Enable

PC Programming Manual References

10.1.2 PBX Configuration—[2-1-2] System—Date & Time—SNTP / Daylight Saving

Feature Guide References

5.5.5 Automatic Setup

◆ Start Date—Year, Month, Day

Specifies the start date of daylight savings time.

Value Range

Year: 2000–2035
Month: 1–12
Day: 1–31

PC Programming Manual References

10.1.2 PBX Configuration—[2-1-2] System—Date & Time—SNTP / Daylight Saving

Feature Guide References

5.5.5 Automatic Setup

◆ End Date—Year, Month, Day

Specifies the end date of daylight savings time.

Value Range

Year: 2000–2035
Month: 1–12
Day: 1–31

PC Programming Manual References

10.1.2 PBX Configuration—[2-1-2] System—Date & Time—SNTP / Daylight Saving

Feature Guide References

5.5.5 Automatic Setup

10.2 PBX Configuration—[2-2] System—Operator & BGM

Settings related to the PBX operator and audio sources can be specified.

◆ PBX Operator—Day, Lunch, Break, Night

Specifies the extension number or floating extension number of incoming call distribution group to be designated as the PBX operator in each time mode (day/lunch/break/night). To select an extension number, click **Destination Setting** (see **2.1.6 Extension Number Setting**).
If **Automatic copy to UM Operator (No.1)** is checked here, the PBX Operator extension number(s) set for Day/Lunch/Break/Night will be copied to the Unified Messaging service's Operator Extension for Operator Service No. 1 (see **23.2 UM Configuration—[4-2] Service Settings—Parameters—Automated Attendant—◆ Operator Service**).

Value Range

Max. 5 digits (consisting of 0–9)

PC Programming Manual References

10.4 PBX Configuration—[2-4] System—Week Table
10.6.1 PBX Configuration—[2-6-1] System—Numbering Plan—Main
11.5.1 PBX Configuration—[3-5-1] Group—Incoming Call Distribution Group—Group Settings
23.2 UM Configuration—[4-2] Service Settings—Parameters—Automated Attendant—◆ Operator Service

Feature Guide References

5.1.5 Operator Features

◆ BGM and Music on Hold—Music on Hold

Selects the audio source for Music on Hold.

Value Range

Tone, BGM1, BGM2, BGM3, BGM4, BGM5, BGM6, BGM7, BGM8

Feature Guide References

2.13.4 Music on Hold

◆ BGM and Music on Hold—Sound on Transfer

Selects the audio source for Music for Transfer (either the same music source chosen for the Music on Hold, or ringback tone).

Value Range

Same as Music on Hold, Ringback Tone

Feature Guide References

2.12.1 Call Transfer

10.3 PBX Configuration—[2-3] System—Timers & Counters

Various system timers and counters can be programmed.

Dial / IRNA / Recall / Tone

◆ Automatic Redial—Repeat Counter

Specifies the number of times Automatic Redial is attempted before being cancelled.

Value Range

0–10

Feature Guide References

2.6.3 Last Number Redial

◆ Automatic Redial—Repeat Interval (x10s)

Specifies the length of time between repeated Automatic Redial attempts.

Value Range

10 × n (n=1–120) s

Feature Guide References

2.6.3 Last Number Redial

◆ Automatic Redial—Redial Call Ring Duration (x10s)

Specifies the length of time that the PBX waits for the called party to answer an Automatic Redial attempt. This is the length of time that the called party's extension will ring for each attempt.

Value Range

10 × n (n=1–30) s

Feature Guide References

2.6.3 Last Number Redial

◆ Automatic Redial—Analogue CO Mute / Busy Detection Timer (s)

Specifies the length of time before the PBX stops muting the caller's voice and cancels busy tone detection when Automatic Redial to analogue trunk is performed.

Value Range

0–15 s

Feature Guide References

2.6.3 Last Number Redial

◆ Dial—Hot Line (Pickup Dial) Start (s)

Specifies the length of time between going off-hook and the start of automatic dialling when the Hot Line feature is set.

Value Range

0–15 s

Feature Guide References

2.6.6 Hot Line

◆ Dial—Extension First Digit (s)

Specifies the length of time after going off-hook within which the first digit of a feature number or destination must be dialled before a reorder tone is heard.

Value Range

1–250 s

Feature Guide References

2.5.2 Automatic Extension Release

◆ Dial—Extension Inter-digit (s)

Specifies the length of time within which subsequent digits must be dialled before the PBX sends a reorder tone.

Value Range

1–250 s

Feature Guide References

2.5.2 Automatic Extension Release

◆ Dial—Analogue CO First Digit (s)

Specifies the length of time within which the first digit of a telephone number must be sent to an analogue trunk. If no digit is sent before this time expires, the PBX recognises end of dialling and stops muting the caller’s voice over the analogue trunk.

Value Range

1–15 s

◆ Dial—Analogue CO Inter-digit (s)

Specifies the length of time within which subsequent digits of a telephone number must be sent to an analogue trunk. If no digit is sent before this time expires, the PBX recognises end of dialling and stops muting the caller's voice over the analogue trunk.

Value Range

1–15 s

◆ Dial—Analogue CO Call Duration Start (s)

Specifies the length of time between the end of dialling and the start of the SMDR timer for outgoing analogue trunk calls.

Value Range

0–60 s

Feature Guide References

2.22.1.1 Station Message Detail Recording (SMDR)

◆ Intercept Routing No Answer (IRNA)—Day (s), Lunch (s), Break (s), Night (s)

Specifies the length of time until an unanswered trunk call is redirected to the intercept routing destination in each time mode.
Note that this setting is only valid for extensions whose ◆ **Intercept No Answer Time—Day, Lunch, Break, Night** is set to "0".

Value Range

1–240 s

PC Programming Manual References

12.1.1 PBX Configuration—[4-1-1] Extension—Wired Extension—Extension Settings—Intercept No Answer Time—◆ Intercept No Answer Time—Day, Lunch, Break, Night

Feature Guide References

2.1.1.5 Intercept Routing

◆ Recall—Hold Recall (s)

Specifies the length of time until the holding extension receives a Hold Recall ring or alarm tone when a held call remains unretrieved.

Value Range

0 (disable the Hold Recall)–240 s

Feature Guide References

2.13.1 Call Hold

◆ Recall—Transfer Recall (s)

Specifies the length of time that a transferred call waits to be answered, before being redirected to the Transfer Recall destination assigned to the original transferring extension.

Value Range

1–240 s

PC Programming Manual References

12.1.1 PBX Configuration—[4-1-1] Extension—Wired Extension—Extension Settings
12.2.1 PBX Configuration—[4-2-1] Extension—Portable Station—Extension Settings

Feature Guide References

2.12.1 Call Transfer

◆ Recall—Call Park Recall (s)

Specifies the length of time that a parked call waits to be retrieved, before the Transfer Recall destination assigned to the extension that parked the call hears a Call Park Recall ring.

Value Range

1–240 s

PC Programming Manual References

12.1.1 PBX Configuration—[4-1-1] Extension—Wired Extension—Extension Settings
12.2.1 PBX Configuration—[4-2-1] Extension—Portable Station—Extension Settings

Feature Guide References

2.13.2 Call Park

◆ Recall—Disconnect after Recall (x60s)

Specifies the length of time after an extension with a trunk call on hold receives a Hold Recall tone that the held call is disconnected.

Value Range

60 × n (n = 1–30) s

Feature Guide References

2.13.1 Call Hold

◆ Tone Length—Busy Tone / DND Tone (s)

Specifies the length of time that a busy/DND tone is heard when a call is made to an extension in busy status or DND mode. A reorder tone will be sent when this timer expires. (For a call through DISA, the call will be disconnected when this timer expires.)

Value Range

1–15 s

Feature Guide References

2.3.3 Do Not Disturb (DND)
2.10 Busy Line/Busy Party Features

◆ Tone Length—Reorder Tone for PT Handset (s)

Specifies the length of time that a reorder tone is heard when using a PT handset. The PT will return to idle status when this timer expires.

Value Range

1–15 s

Feature Guide References

2.5.2 Automatic Extension Release

◆ Tone Length—Reorder Tone for PT Hands-free (s)

Specifies the length of time that a reorder tone is heard from the built-in speaker of a PT in hands-free mode. The PT will return to idle status when this timer expires. This setting is applied to PSs as well as PTs.

Value Range

1–15 s

Feature Guide References

2.5.2 Automatic Extension Release
2.11.1 Hands-free Operation

DISA / Door / Reminder / U. Conf

◆ DISA—Delayed Answer Timer (s)

Specifies the length of time that the caller hears a ringback tone before hearing an OGM.

Value Range

0–30 s

PC Programming Manual References

13.3.2 PBX Configuration—[5-3-2] Optional Device—Voice Message—DISA Message

Feature Guide References

2.16.1 Direct Inward System Access (DISA)

◆ DISA—Mute & OGM Start Timer after answering (s)

Specifies the length of time until the caller hears an OGM after reaching the DISA line.

Value Range

0.0–12.0 s

PC Programming Manual References

13.3.2 PBX Configuration—[5-3-2] Optional Device—Voice Message—DISA Message

Feature Guide References

2.16.1 Direct Inward System Access (DISA)

◆ DISA—No Dial Intercept Timer (s)

Specifies the length of time after the OGM finishes playing in which the caller must begin dialling before the call is redirected to the operator.

Value Range

0–120 s

PC Programming Manual References

10.2 PBX Configuration—[2-2] System—Operator & BGM
13.3.2 PBX Configuration—[5-3-2] Optional Device—Voice Message—DISA Message
14.6 PBX Configuration—[6-6] Feature—Tenant—◆ Operator (Extension Number)

Feature Guide References

2.16.1 Direct Inward System Access (DISA)

◆ DISA—2nd Dial Timer for AA (s)

Specifies the length of time in which the caller must dial the second digit before the DISA AA Service activates.

Value Range

0–5 s

PC Programming Manual References

13.3.2 PBX Configuration—[5-3-2] Optional Device—Voice Message—DISA Message

Feature Guide References

2.16.1 Direct Inward System Access (DISA)

◆ DISA—Intercept Timer—Day (s), Lunch (s), Break (s), Night (s)

Specifies the length of time until an unanswered DISA call is intercepted and redirected to the intercept routing destination after the original destination receives the call in each time mode.

Value Range

0–60 s

PC Programming Manual References

12.1.1 PBX Configuration—[4-1-1] Extension—Wired Extension—Extension Settings—Intercept Destination—◆ Intercept Destination—When called party does not answer—Day, Lunch, Break, Night
12.2.1 PBX Configuration—[4-2-1] Extension—Portable Station—Extension Settings—Intercept Destination—◆ Intercept Destination—When called party does not answer—Day, Lunch, Break, Night
13.3.2 PBX Configuration—[5-3-2] Optional Device—Voice Message—DISA Message

Feature Guide References

2.1.1.5 Intercept Routing
2.16.1 Direct Inward System Access (DISA)

◆ DISA—Disconnect Timer after Intercept (s)

Specifies the length of time that an intercepted DISA call rings at the intercept routing destination before being disconnected.

Value Range

0–60 s

PC Programming Manual References

13.3.2 PBX Configuration—[5-3-2] Optional Device—Voice Message—DISA Message

Feature Guide References

2.16.1 Direct Inward System Access (DISA)

◆ DISA—CO-to-CO Call Prolong Counter

Specifies the number of times that the caller can prolong a trunk-to-trunk call on a DISA line. (Selecting "0" enables the caller to prolong the trunk-to-trunk call without restriction.)

Value Range

0–15

PC Programming Manual References

13.3.2 PBX Configuration—[5-3-2] Optional Device—Voice Message—DISA Message

Feature Guide References

2.16.1 Direct Inward System Access (DISA)

◆ DISA—CO-to-CO Call Prolong Time (x60s)

Specifies the length of time that a trunk-to-trunk call on a DISA line is prolonged each time that the caller prolongs the call. (Selecting "0" prevents the caller from prolonging the trunk-to-trunk call.)

Value Range

60 × n (n = 0–7) s

PC Programming Manual References

13.3.2 PBX Configuration—[5-3-2] Optional Device—Voice Message—DISA Message

Feature Guide References

2.16.1 Direct Inward System Access (DISA)

◆ DISA—Progress Tone Continuation Time before Recording Message (s)

Specifies the length of time that a progress tone is sent to the manager extension before recording an OGM.

Value Range

0–60 s

PC Programming Manual References

13.3.2 PBX Configuration—[5-3-2] Optional Device—Voice Message—DISA Message

Feature Guide References

2.30.2 Outgoing Message (OGM)

◆ DISA—Reorder Tone Duration (s)

Specifies the length of time that a reorder tone is sent to the caller before the call is disconnected. If "0" is specified, no reorder tone is sent and the call is disconnected immediately.

Value Range

0–15 s

PC Programming Manual References

13.3.2 PBX Configuration—[5-3-2] Optional Device—Voice Message—DISA Message

Feature Guide References

2.16.1 Direct Inward System Access (DISA)

◆ Doorphone—Call Ring Duration (x10s)

Specifies the length of time that a call from a doorphone rings until the call is cancelled when there is no answer.

Value Range

10 × n (n=1–15) s

PC Programming Manual References

13.1 PBX Configuration—[5-1] Optional Device—Doorphone

Feature Guide References

2.18.1 Doorphone Call

◆ Doorphone—Call Duration (x10s)

Specifies the length of time until an answered doorphone call is disconnected.

Value Range

10 × n (n=0–30) s

PC Programming Manual References

13.1 PBX Configuration—[5-1] Optional Device—Doorphone

Feature Guide References

2.18.1 Doorphone Call

◆ Doorphone—Open Duration (s)

Specifies the length of time that a door stays unlocked after being opened from an extension.

Value Range

2–7 s

PC Programming Manual References

13.1 PBX Configuration—[5-1] Optional Device—Doorphone

Feature Guide References

2.18.2 Door Open

◆ Timed Reminder—Repeat Counter

Specifies the number of times that an alarm is repeated.

Value Range

1–15

Feature Guide References

2.24.4 Timed Reminder

◆ Timed Reminder—Interval Time (x10s)

Specifies the length of time between the repeated alarms.

Value Range

10 × n (n=1–120) s

Feature Guide References

2.24.4 Timed Reminder

◆ Timed Reminder—Alarm Ringing Duration (x10s)

Specifies the length of time that an alarm rings.

Value Range

10 × n (n=1–30) s

Feature Guide References

2.24.4 Timed Reminder

◆ Unattended Conference—Recall Start Timer (x60s)

Specifies the length of time until the conference originator receives an Unattended Conference Recall tone.

Value Range

60 × n (n = 0–60) s

Feature Guide References

2.14.2 Conference

◆ Unattended Conference—Warning Tone Start Timer (s)

Specifies the length of time until the parties involved in an Unattended Conference receive a warning tone after the conference originator receives the Unattended Conference Recall tone but does not return to the conference.

Value Range

0–240 s

Feature Guide References

2.14.2 Conference

◆ Unattended Conference—Disconnect Timer (s)

Specifies the length of time until an Unattended Conference is disconnected after the parties involved in the conference receive a warning tone but the conference originator does not return to the conference.

Value Range

0–240 s

Feature Guide References

2.14.2 Conference

Miscellaneous

◆ Caller ID—Waiting to receive (s)

Specifies the length of time that the PBX waits to receive Caller ID from an analogue trunk. If the Caller ID is received through an analogue trunk card on which no Caller ID card is mounted or through a port to which Caller ID Detection is disabled, this timer is not applicable.

Value Range

0–15 s

PC Programming Manual References

11.1.3 PBX Configuration—[3-1-3] Group—Trunk Group—Caller ID Modification
14.1 PBX Configuration—[6-1] Feature—System Speed Dial

Feature Guide References

2.19.1 Caller ID

◆ Caller ID—Visual Caller ID Display (s)

Specifies the length of time that a Caller ID number, with the Call Waiting tone offered by an analogue line from the telephone company, is shown on the display. The Caller ID number flashes on the display for five seconds, followed by a 10-second pause, then flashes again for five seconds.

Value Range

0–250 s

Feature Guide References

2.1.3.3 Call Waiting
2.10.4.2 Call Waiting Tone
2.19.1 Caller ID

◆ Extension PIN—Lock Counter

Specifies the number of successive incorrect PIN entries allowed before the extension PIN is locked. A locked extension PIN cannot be used until reset from the extension assigned as manager. (Specifying "None" disables this counter.)

Value Range

None, 1–15

Feature Guide References

2.7.5 Walking COS
2.7.6 Verification Code Entry
2.24.1 Extension Personal Identification Number (PIN)

◆ External Sensor—Ring Duration (s)

Specifies the length of time that the PBX waits for the called party to answer before cancelling a sensor call.

Value Range

10 × n (n=1–15) s

Feature Guide References

2.18.3 External Sensor

◆ Incoming Call Inter-digit Timer—DDI / DID (s)

Specifies the length of time between digits when receiving a DDI/DID number from a public network. The call will be redirected to a PBX operator when this timer expires.

Value Range

0–30 s

PC Programming Manual References

18.3 PBX Configuration—[10-3] CO & Incoming Call—DDI / DID Table

Feature Guide References

2.1.1.3 Direct Inward Dialling (DID)/Direct Dialling In (DDI)

◆ Incoming Call Inter-digit Timer—TIE (s)

Specifies the length of time between digits when receiving a dialled number from a TIE line. The call will be redirected to a PBX operator when this timer expires.

Value Range

3–30 s

PC Programming Manual References

17.1 PBX Configuration—[9-1] Private Network—TIE Table

Feature Guide References

4.2.1 TIE Line Service

◆ PT Display—PT Last Display Duration in Idle Mode (s)

Specifies the length of time that the current information remains on the display after the extension returns to idle status.

Value Range

1–15 s

◆ Air Synchronisation—Watching Degeneracy (x60s)

Specifies the length of time that a Slave CS can maintain an ongoing call after air synchronisation is lost.

Value Range

60 × n (n=0–300) s

PC Programming Manual References

19.3 PBX Configuration—[11-3] Maintenance—Air Synchronisation

◆ Voice Mail (Caller from VM to CO)—On-hook Wait Time (s)

Specifies the length of time from when the voice mail seizes a trunk (for example, to transfer a call) until the voice mail goes on hook. If the time specified here is too short, the voice mail will be unable to dial the number and make a connection.

Value Range

1–30 s

Feature Guide References

3.1.1 Unified Messaging System Overview

◆ During Conversation—DTMF Signal Length (ms)

Specifies the length of time that a DTMF signal is sent when a number is dialled from a PT during a conversation.

Value Range

80 ms, 160 ms, 240 ms, 320 ms

◆ During Conversation—DTMF Inter-digit Pause (ms)

Specifies the length of time between DTMF signals when numbers are dialled in succession from a PT during a conversation.

Value Range

64 + 16 × n (n=0–15) ms

◆ During Conversation—Pause Signal Time (s)

Specifies the length of the pause inserted when the PAUSE button is pressed during a conversation.

Value Range

1.5 s, 2.5 s, 3.5 s, 4.5 s

Feature Guide References

2.5.4.7 Pause Insertion

◆ System Wireless—PS Out of Range Timer (s)

When the destination of an incoming call is a PS, specifies the length of time the PBX searches for the PS before setting its status to Out of Range.
If "0" is assigned, the timer is controlled by the cell station.

Value Range

0–30 s

PC Programming Manual References

10.9 PBX Configuration—[2-9] System—System Options—◆ System Wireless—Out of Range Registration

◆ SVM—Recording Time (s)

Specifies the maximum length of a message recorded by the SVM feature.

Value Range

1–600 s

PC Programming Manual References

12.1.8 PBX Configuration-[4-1-8] Extension-Wired Extension-Simplified Voice Message
12.2.6 PBX Configuration-[4-2-6] Extension—Portable Station—Simplified Voice Message

Feature Guide References

2.16.3 Built-in Simplified Voice Message (SVM)

◆ SVM—Dial Tone Continuous Time (s)

Specifies the length of time that dial tone 3 is heard after all messages stored by the SVM feature for an extension are finished playing.

Value Range

1–60 s

PC Programming Manual References

12.1.8 PBX Configuration-[4-1-8] Extension-Wired Extension-Simplified Voice Message
12.2.6 PBX Configuration-[4-2-6] Extension—Portable Station—Simplified Voice Message

Feature Guide References

2.16.3 Built-in Simplified Voice Message (SVM)

◆ Conference Group Call—Ring Duration (s)

Specifies the length of time that a conference group call will ring. The conference group call will be established with members who answer within this time. If no members answer the call before this timer expires, the call is cancelled.

Value Range

0–120 s

PC Programming Manual References

10.6.1 PBX Configuration—[2-6-1] System—Numbering Plan—Main—Features—◆ Conference Group Call Operation
10.7.1 PBX Configuration—[2-7-1] System—Class of Service—COS Settings—Miscellaneous—◆ Conference Group Call Operation
11.9 PBX Configuration—[3-9] Group—Conference Group

Feature Guide References

2.15.1 Conference Group Call

10.4 PBX Configuration—[2-4] System—Week Table

A specific time mode (day, night, lunch, or break) can be selected for operation depending on the time of day. The time mode can be switched either automatically or manually. Select the desired switching mode from the **Time Service Switching Mode** option.
Time Table numbers correspond to tenant numbers (for example, Tenant 1 uses Time Table 1). Select the desired Time Table from the **Time Table No.** list.
When in Automatic Switching mode, the time modes of the tenant are switched as programmed in the corresponding Time Table. Manual switching is possible only from an authorised extension (determined by COS).

- To adjust the currently displayed Time Table, click and drag the divisions between two time periods.
- To programme the time blocks of the currently displayed Time Table, including adding or deleting time blocks, click **Time Setting**.

10.4.1 PBX Configuration—[2-4] System—Week Table—Time Setting

The start times of 4 different time blocks can be programmed for each day of the week, for the selected Time Table, as well as the start and end times of up to 3 break periods.

◆ 1. Day/Lunch/Night—Day1 Start, Lunch Start, Day2 Start, Night Start—Setting

Enables the setting of the start time for each time block.

Value Range

Disable, Enable

Feature Guide References

5.1.3 Tenant Service
5.1.4 Time Service

◆ 1. Day/Lunch/Night—Day1 Start, Lunch Start, Day2 Start, Night Start—Hour, Minute

Specifies the start time for each time block. Times can only be set when ◆ **1. Day/Lunch/Night—Day1 Start, Lunch Start, Day2 Start, Night Start—Setting** is set to **Enable**.

Value Range

00:00–23:59

Feature Guide References

5.1.3 Tenant Service
5.1.4 Time Service

◆ 2. Break—Break 1–3 Start—Setting

Enables the setting of the start time for each break period.

Value Range

Disable, Enable

Feature Guide References

5.1.3 Tenant Service
5.1.4 Time Service

◆ 2. Break—Break 1–3 Start—Hour, Minute

Specifies the start time for each break period. Times can only be set when ◆ **2. Break—Break 1–3 Start—Setting** is set to **Enable**.

Value Range

00:00–23:59

Feature Guide References

5.1.3 Tenant Service
5.1.4 Time Service

◆ 2. Break—Break 1–3 End—Hour, Minute

Specifies the end time for each break period. Times can only be set when ◆ **2. Break—Break 1–3 Start—Setting** is set to **Enable**.

Value Range

00:00–23:59

Feature Guide References

5.1.3 Tenant Service
5.1.4 Time Service

10.5 PBX Configuration—[2-5] System—Holiday Table

A specific time mode (day, night, lunch, or break) can be selected for operation during holidays. Select the desired time mode from the **Holiday Mode** list.
The start and end dates of a maximum of 24 different holidays can be programmed.
You can click the **UM Holiday Table** tab to open the Holiday Table used for features of the Unified Messaging system. These settings are synchronised with Unified Messaging system Holiday settings.

◆ Holiday Table—Setting

Enables the setting of the holiday.

Value Range

Disable, Enable

PC Programming Manual References

23.4 UM Configuration—[4-4] Service Settings—Holiday Table—◆ Setting

Feature Guide References

5.1.4 Time Service

◆ Holiday Table—Start Date—Month

Specifies the month of the holiday start date.

Value Range

1–12

PC Programming Manual References

23.4 UM Configuration—[4-4] Service Settings—Holiday Table—◆ Start Date (Month Day)

Feature Guide References

5.1.4 Time Service

◆ Holiday Table—Start Date—Day

Specifies the day of the holiday start date.

Value Range

1–31

PC Programming Manual References

23.4 UM Configuration—[4-4] Service Settings—Holiday Table—◆ Start Date (Month Day)

Feature Guide References

5.1.4 Time Service

◆ Holiday Table—End Date—Month

Specifies the month of the holiday end date.

Value Range

1–12

PC Programming Manual References

23.4 UM Configuration—[4-4] Service Settings—Holiday Table—◆ End Date (Month Day)

Feature Guide References

5.1.4 Time Service

◆ Holiday Table—End Date—Day

Specifies the day of the holiday end date.

Value Range

1–31

PC Programming Manual References

23.4 UM Configuration—[4-4] Service Settings—Holiday Table—◆ End Date (Month Day)

Feature Guide References

5.1.4 Time Service

10.6 PBX Configuration—[2-6] System—Numbering Plan

10.6.1 PBX Configuration—[2-6-1] System—Numbering Plan—Main

Details of the extension numbering schemes, feature access numbers, and numbers to access other PBXs in a network can be programmed here.
For more information on flexible numbering, see "5.5.7 Flexible Numbering/Fixed Numbering" in the Feature Guide.

Note

- Numbering does not necessarily have to be uniform; varying numbers of digits can be used for each setting.
- To programme these settings, all installed V-SIPEXT8 and V-UTEXT8 cards must first be set to OUS. For details, see **9.1 PBX Configuration—[1-1] Configuration—Slot**.

Extension

The leading numbers and the number of additional digits of the extension numbers for a maximum of 64 different extension numbering schemes can be programmed.

◆ Leading Number

Specifies the leading number of extension numbers and floating extension numbers.

Note

Changing this value will also affect the following settings.

- **Extension Number** as set in **User Profiles** and **UM Configuration**
- **Mailbox Number** when set to synchronise with **Extension Number** settings
  (However, **Mailbox Number** synchronisation depends on the setting **10.9 PBX Configuration—[2-9] System—System Options—Option 9—◆ Extension / Mailbox Setting—Mailbox Number Synchronization with Extension Number**.)

Value Range

Max. 3 digits (consisting of 0–9)

PC Programming Manual References

10.9 PBX Configuration—[2-9] System—System Options—Option 9—◆ Extension / Mailbox Setting—Mailbox Number Synchronization with Extension Number
11.5.1 PBX Configuration—[3-5-1] Group—Incoming Call Distribution Group—Group Settings
11.7.2 PBX Configuration—[3-7-2] Group—UM Group—Unit Settings
12.1.1 PBX Configuration—[4-1-1] Extension—Wired Extension—Extension Settings
12.2.1 PBX Configuration—[4-2-1] Extension—Portable Station—Extension Settings
13.3.2 PBX Configuration—[5-3-2] Optional Device—Voice Message—DISA Message
19.1 PBX Configuration—[11-1] Maintenance—Main
20.1 UM Configuration—[1] Mailbox Settings—◆ Mailbox Number

◆ No. of Additional Digits

Specifies the number of additional digits following the leading number.

Value Range

None: 0 digit
X: 1 digit
XX: 2 digits

Features

Feature numbers to access various PBX features can be programmed. The following features are available while hearing a dial tone.

◆ Operator Call

Specifies the feature number used to call the operator.

Value Range

Max. 4 digits (consisting of 0–9, *, and #)

PC Programming Manual References

10.2 PBX Configuration—[2-2] System—Operator & BGM
14.6 PBX Configuration—[6-6] Feature—Tenant

Feature Guide References

5.1.5 Operator Features

◆ Idle Line Access (Local Access)

Specifies the feature number used to make a trunk call by Idle Line Access (selects an idle trunk automatically).

Value Range

Max. 4 digits (consisting of 0–9, *, and #)

PC Programming Manual References

11.1.2 PBX Configuration—[3-1-2] Group—Trunk Group—Local Access Priority

Feature Guide References

2.5.5.3 Trunk Access

◆ Trunk Group Access

Specifies the feature number used to make a trunk call using an idle trunk from a certain trunk group.

Value Range

Max. 4 digits (consisting of 0–9, *, and #)

PC Programming Manual References

18.1 PBX Configuration—[10-1] CO & Incoming Call—CO Line Settings

◆ TIE Line Access

Specifies the feature number used to make a TIE line call.

Value Range

Max. 4 digits (consisting of 0–9, *, and #)

PC Programming Manual References

17.1 PBX Configuration—[9-1] Private Network—TIE Table

Feature Guide References

4.2.1 TIE Line Service

◆ Redial

Specifies the feature number used to redial the last number dialled.

Value Range

Max. 4 digits (consisting of 0–9, *, and #)

Feature Guide References

2.6.3 Last Number Redial

◆ System Speed Dialling / Personal Speed Dialling

Specifies the feature number used to make a call using a System/Personal Speed Dialling number.

Value Range

Max. 4 digits (consisting of 0–9, *, and #)

PC Programming Manual References

12.1.3 PBX Configuration—[4-1-3] Extension—Wired Extension—Speed Dial
14.1 PBX Configuration—[6-1] Feature—System Speed Dial

Feature Guide References

2.6.4 Speed Dialling—Personal/System

◆ Personal Speed Dialling - Programming

Specifies the feature number used to programme Personal Speed Dialling numbers at an extension.

Value Range

Max. 4 digits (consisting of 0–9, *, and #)

Feature Guide References

2.6.4 Speed Dialling—Personal/System

◆ DOORPHONE Call

Specifies the feature number used to make a call to a doorphone.

Value Range

Max. 4 digits (consisting of 0–9, *, and #)

PC Programming Manual References

13.1 PBX Configuration—[5-1] Optional Device—Doorphone

Feature Guide References

2.18.1 Doorphone Call

◆ Group Paging

Specifies the feature number used to page a certain paging group.

Value Range

Max. 4 digits (consisting of 0–9, *, and #)

PC Programming Manual References

11.4 PBX Configuration—[3-4] Group—Paging Group

Feature Guide References

2.17.1 Paging

◆ External BGM On / Off

Specifies the feature number, available for manager extensions, used to turn on or off the external BGM.

Value Range

Max. 4 digits (consisting of 0–9, *, and #)

PC Programming Manual References

10.2 PBX Configuration—[2-2] System—Operator & BGM
10.7.1 PBX Configuration—[2-7-1] System—Class of Service—COS Settings—Manager—◆ Manager

Feature Guide References

2.30.1 Background Music (BGM)

◆ OGM Record / Clear / Playback

Specifies the feature number, available for manager extensions, used to record, clear, or play back a certain OGM.

Value Range

Max. 4 digits (consisting of 0–9, *, and #)

PC Programming Manual References

13.3.2 PBX Configuration—[5-3-2] Optional Device—Voice Message—DISA Message
10.7.1 PBX Configuration—[2-7-1] System—Class of Service—COS Settings—Manager—◆ Manager

Feature Guide References

2.30.2 Outgoing Message (OGM)

◆ Single CO Line Access

Specifies the feature number used to make a trunk call using a certain trunk.

Value Range

Max. 4 digits (consisting of 0–9, *, and #)

PC Programming Manual References

18.1 PBX Configuration—[10-1] CO & Incoming Call—CO Line Settings

Feature Guide References

2.5.5.3 Trunk Access

◆ Parallel Telephone (Ring) Mode Set / Cancel

Specifies the feature number used to set or cancel an SLT connected in parallel with a DPT to ring when receiving an incoming call.

Note

This feature is restricted to extensions connected Expansion Units. For information about connecting SLTs and DPTs in parallel, refer to 2.11.10 Parallelled Telephone in the Feature Guide.

Value Range

Max. 4 digits (consisting of 0–9, *, and #)

Feature Guide References

2.11.10 Parallelled Telephone

◆ Group Call Pickup

Specifies the feature number used to answer a call ringing at a certain call pickup group.

Value Range

Max. 4 digits (consisting of 0–9, *, and #)

PC Programming Manual References

11.3 PBX Configuration—[3-3] Group—Call Pickup Group

Feature Guide References

2.4.3 Call Pickup

◆ Directed Call Pickup

Specifies the feature number used to answer a call ringing at a certain extension.

Value Range

Max. 4 digits (consisting of 0–9, *, and #)

PC Programming Manual References

12.1.1 PBX Configuration—[4-1-1] Extension—Wired Extension—Extension Settings—Option 3—◆ Call Pickup Deny
12.2.1 PBX Configuration—[4-2-1] Extension—Portable Station—Extension Settings—Option 3—◆ Call Pickup Deny

Feature Guide References

2.4.3 Call Pickup

◆ TAFAS Answer

Specifies the feature number used to answer a trunk call notified through an external pager.

Value Range

Max. 4 digits (consisting of 0–9, *, and #)

PC Programming Manual References

13.2 PBX Configuration—[5-2] Optional Device—External Pager

Feature Guide References

2.17.2 Trunk Answer From Any Station (TAFAS)

◆ Group Paging Answer

Specifies the feature number used to answer a page to a paging group.

Value Range

Max. 4 digits (consisting of 0–9, *, and #)

PC Programming Manual References

11.4 PBX Configuration—[3-4] Group—Paging Group

Feature Guide References

2.17.1 Paging

◆ Automatic Callback Busy Cancel

Specifies the feature number used to cancel Automatic Callback Busy.

Value Range

Max. 4 digits (consisting of 0–9, *, and #)

Feature Guide References

2.10.1 Automatic Callback Busy (Camp-on)

◆ User Remote Operation / Walking COS / Verification Code

Specifies the feature number used to change the COS of an extension temporarily, and also change the feature settings (for example, FWD, DND) of an extension from another extension or through DISA.

Value Range

Max. 4 digits (consisting of 0–9, *, and #)

PC Programming Manual References

10.7.1 PBX Configuration—[2-7-1] System—Class of Service—COS Settings—Optional Device & Other Extensions—◆ Remote Operation by Other Extension

Feature Guide References

2.7.5 Walking COS
2.7.6 Verification Code Entry

◆ Wireless XDP Parallel Mode Set / Cancel

Specifies the feature number used to set or cancel Wireless XDP Parallel mode.

Value Range

Max. 4 digits (consisting of 0–9, *, and #)

PC Programming Manual References

10.7.1 PBX Configuration—[2-7-1] System—Class of Service—COS Settings—Optional Device & Other Extensions—◆ Accept Wireless XDP Parallel Mode Set by PS

◆ Account Code Entry

Specifies the feature number used to enter an Account Code.

Value Range

Max. 4 digits (consisting of 0–9, *, and #)

Feature Guide References

2.5.4.3 Account Code Entry

◆ Call Hold / Call Hold Retrieve

Specifies the feature number used to hold a call or retrieve a call on hold from the holding extension.

Value Range

Max. 4 digits (consisting of 0–9, *, and #)

Feature Guide References

2.13.1 Call Hold

◆ Call Hold Retrieve : Specified with a Holding Extension Number

Specifies the feature number used to retrieve a held call from a different extension by specifying a holding extension number.

Value Range

Max. 4 digits (consisting of 0–9, *, and #)

Feature Guide References

2.13.1 Call Hold

◆ Call Park / Call Park Retrieve

Specifies the feature number used to hold a call in a parking zone or retrieve a call held in a parking zone.

Value Range

Max. 4 digits (consisting of 0–9, *, and #)

Feature Guide References

2.13.2 Call Park

◆ Hold Retrieve : Specified with a Held CO Line Number

Specifies the feature number used to retrieve a held trunk call from a different extension by specifying the held trunk number.

Value Range

Max. 4 digits (consisting of 0–9, *, and #)

Feature Guide References

2.13.1 Call Hold

◆ Door Open

Specifies the feature number used to open a door.

Value Range

Max. 4 digits (consisting of 0–9, *, and #)

PC Programming Manual References

13.1 PBX Configuration—[5-1] Optional Device—Doorphone

Feature Guide References

2.18.2 Door Open

◆ External Relay Access

Specifies the feature number used to activate a relay.

Value Range

Max. 4 digits (consisting of 0–9, *, and #)

PC Programming Manual References

13.4 PBX Configuration—[5-4] Optional Device—External Relay

Feature Guide References

2.18.4 External Relay Control

◆ External Feature Access

Specifies the feature number used to access the features of a host PBX or the telephone company.

Value Range

Max. 4 digits (consisting of 0–9, *, and #)

Feature Guide References

2.11.7 External Feature Access (EFA)

◆ SIP Refer(Blind)

Specifies the feature number used to perform a blind transfer from a SIP extension.

Value Range

Max. 4 digits (consisting of 0–9, *, and #)

Feature Guide References

5.2.2 SIP (Session Initiation Protocol) Extension

◆ ISDN Hold

Specifies the feature number used to hold a call using the ISDN service of the telephone company, instead of the PBX feature.

Value Range

Max. 4 digits (consisting of 0–9, *, and #)

Feature Guide References

4.1.2.5 Call Hold (HOLD)—by ISDN

◆ COLR Set / Cancel

Specifies the feature number used to set or cancel COLR, which suppresses the presentation of the called party's number to the caller.

Value Range

Max. 4 digits (consisting of 0–9, *, and #)

PC Programming Manual References

9.26 PBX Configuration—[1-1] Configuration—Slot—Port Property - PRI Port—Supplementary Service—◆ COLP, CLIR, COLR, CNIP, CONP, CNIR, CONR, CF (Rerouting), CT, CCBS, AOC-D, AOC-E, E911, 3PTY

Feature Guide References

4.1.2.2 Calling/Connected Line Identification Presentation (CLIP/COLP)
4.2.4.2 Calling/Connected Line Identification Presentation (CLIP/COLP) and Calling/Connected Name Identification Presentation (CNIP/CONP)—by QSIG

◆ CLIR Set / Cancel

Specifies the feature number used to set or cancel CLIR, which suppresses the presentation of the caller's number to the called party.

Value Range

Max. 4 digits (consisting of 0–9, *, and #)

PC Programming Manual References

9.26 PBX Configuration—[1-1] Configuration—Slot—Port Property - PRI Port—Supplementary Service—◆ COLP, CLIR, COLR, CNIP, CONP, CNIR, CONR, CF (Rerouting), CT, CCBS, AOC-D, AOC-E, E911, 3PTY

Feature Guide References

4.1.2.2 Calling/Connected Line Identification Presentation (CLIP/COLP)
4.2.4.2 Calling/Connected Line Identification Presentation (CLIP/COLP) and Calling/Connected Name Identification Presentation (CNIP/CONP)—by QSIG

◆ Switch CLIP of CO Line / Extension

Specifies the feature number used to send either the CLIP number of the trunk in use (subscriber's number) or the extension to the network.

Value Range

Max. 4 digits (consisting of 0–9, *, and #)

PC Programming Manual References

9.26 PBX Configuration—[1-1] Configuration—Slot—Port Property - PRI Port—CO Setting—◆ Subscriber Number
12.1.1 PBX Configuration—[4-1-1] Extension—Wired Extension—Extension Settings—CLIP—◆ CLIP ID
12.2.1 PBX Configuration—[4-2-1] Extension—Portable Station—Extension Settings—CLIP—◆ CLIP ID

Feature Guide References

4.1.2.2 Calling/Connected Line Identification Presentation (CLIP/COLP)

◆ MCID

Specifies the feature number used to ask the telephone company to trace a malicious call. This feature can be used during a call or while hearing a reorder tone after the caller hangs up.

Value Range

Max. 4 digits (consisting of 0–9, *, and #)

Feature Guide References

4.1.2.8 Malicious Call Identification (MCID)

◆ ISDN-FWD (MSN) Set / Cancel / Confirm

Specifies the feature number used to set or cancel the FWD of incoming ISDN calls to an outside party using the ISDN service of the telephone company (instead of the PBX), or confirm the FWD setting.
Extension users can set the FWD destination to the network on an MSN basis.

Value Range

Max. 4 digits (consisting of 0–9, *, and #)

Feature Guide References

4.1.2.4 Call Forwarding (CF)—by ISDN (P-P)

◆ Message Waiting Set / Cancel / Call Back

Specifies the feature number used to set or cancel Message Waiting, or call back the caller.

Value Range

Max. 4 digits (consisting of 0–9, *, and #)

Feature Guide References

2.20.1 Message Waiting

◆ FWD/DND Set / Cancel: Call from CO & Extension

Specifies the feature number used to set or cancel FWD/DND for incoming trunk and intercom calls.

Value Range

Max. 4 digits (consisting of 0–9, *, and #)

PC Programming Manual References

12.1.2 PBX Configuration—[4-1-2] Extension—Wired Extension—FWD/DND
12.2.2 PBX Configuration—[4-2-2] Extension—Portable Station—FWD/DND

Feature Guide References

2.3 Call Forwarding (FWD)/Do Not Disturb (DND) Features

◆ FWD/DND Set / Cancel: Call from CO

Specifies the feature number used to set or cancel FWD/DND for incoming trunk calls.

Value Range

Max. 4 digits (consisting of 0–9, *, and #)

PC Programming Manual References

12.1.2 PBX Configuration—[4-1-2] Extension—Wired Extension—FWD/DND
12.2.2 PBX Configuration—[4-2-2] Extension—Portable Station—FWD/DND

Feature Guide References

2.3 Call Forwarding (FWD)/Do Not Disturb (DND) Features

◆ FWD/DND Set / Cancel: Call from Extension

Specifies the feature number used to set or cancel FWD/DND for incoming intercom calls.

Value Range

Max. 4 digits (consisting of 0–9, *, and #)

PC Programming Manual References

12.1.2 PBX Configuration—[4-1-2] Extension—Wired Extension—FWD/DND
12.2.2 PBX Configuration—[4-2-2] Extension—Portable Station—FWD/DND

Feature Guide References

2.3 Call Forwarding (FWD)/Do Not Disturb (DND) Features

◆ FWD No Answer Timer Set

Specifies the feature number used to set the length of time before a call is forwarded.

Value Range

Max. 4 digits (consisting of 0–9, *, and #)

PC Programming Manual References

12.1.2 PBX Configuration—[4-1-2] Extension—Wired Extension—FWD/DND
12.2.2 PBX Configuration—[4-2-2] Extension—Portable Station—FWD/DND

Feature Guide References

2.3.2 Call Forwarding (FWD)

◆ Group FWD Set / Cancel: Call from CO & Extension

Specifies the feature number used to set or cancel FWD for incoming trunk and intercom calls to an incoming call distribution group.

Value Range

Max. 4 digits (consisting of 0–9, *, and #)

PC Programming Manual References

11.5.1 PBX Configuration—[3-5-1] Group—Incoming Call Distribution Group—Group Settings

Feature Guide References

2.3.1 Call Forwarding (FWD)/Do Not Disturb (DND)—SUMMARY

◆ Group FWD Set / Cancel: Call from CO

Specifies the feature number used to set or cancel FWD for incoming trunk calls to an incoming call distribution group.

Value Range

Max. 4 digits (consisting of 0–9, *, and #)

PC Programming Manual References

11.5.1 PBX Configuration—[3-5-1] Group—Incoming Call Distribution Group—Group Settings

Feature Guide References

2.3.1 Call Forwarding (FWD)/Do Not Disturb (DND)—SUMMARY

◆ Group FWD Set / Cancel: Call from Extension

Specifies the feature number used to set or cancel FWD for incoming intercom calls to an incoming call distribution group.

Value Range

Max. 4 digits (consisting of 0–9, *, and #)

PC Programming Manual References

11.5.1 PBX Configuration—[3-5-1] Group—Incoming Call Distribution Group—Group Settings

Feature Guide References

2.3.1 Call Forwarding (FWD)/Do Not Disturb (DND)—SUMMARY

◆ Call Pickup Deny Set / Cancel

Specifies the feature number used to set or cancel Call Pickup Deny (i.e., preventing other extensions from picking up calls to your extension).

Value Range

Max. 4 digits (consisting of 0–9, *, and #)

Feature Guide References

2.4.3 Call Pickup

◆ Paging Deny Set / Cancel

Specifies the feature number used to set or cancel Paging Deny (i.e., preventing other extensions from paging your extension).

Value Range

Max. 4 digits (consisting of 0–9, *, and #)

PC Programming Manual References

11.4 PBX Configuration—[3-4] Group—Paging Group

Feature Guide References

2.17.1 Paging

◆ Walking Extension

Specifies the feature number used to use the same extension settings at a new extension.

Value Range

Max. 4 digits (consisting of 0–9, *, and #)

Feature Guide References

2.24.3 Walking Extension Features

◆ Data Line Security Set / Cancel

Specifies the feature number used to set or cancel Data Line Security (i.e., preventing signals from other extensions during data transmission).

Value Range

Max. 4 digits (consisting of 0–9, *, and #)

Feature Guide References

2.11.5 Data Line Security

◆ Manual Call Waiting for Extension Call

Specifies the feature number used to set or change the method of receiving a Call Waiting notification from an extension.

Value Range

Max. 4 digits (consisting of 0–9, *, and #)

Feature Guide References

2.1.3.3 Call Waiting

◆ Automatic Call Waiting

Specifies the feature number used to set or cancel a Call Waiting notification from a trunk, doorphone, or a call via an incoming call distribution group.

Value Range

Max. 4 digits (consisting of 0–9, *, and #)

Feature Guide References

2.1.3.3 Call Waiting

◆ Executive Override Deny Set / Cancel

Specifies the feature number used to set or cancel Executive Busy Override (i.e., preventing other extensions from joining your conversation).

Value Range

Max. 4 digits (consisting of 0–9, *, and #)

PC Programming Manual References

10.7.1 PBX Configuration—[2-7-1] System—Class of Service—COS Settings—Executive—◆ Executive Busy Override
10.7.1 PBX Configuration—[2-7-1] System—Class of Service—COS Settings—Executive—◆ Executive Busy Override Deny

Feature Guide References

2.10.2 Executive Busy Override

◆ Not Ready (Manual Wrap-up) Mode On / Off

Specifies the feature number used to enter or leave Not Ready mode.

Value Range

Max. 4 digits (consisting of 0–9, *, and #)

PC Programming Manual References

11.5.1 PBX Configuration—[3-5-1] Group—Incoming Call Distribution Group—Group Settings

Feature Guide References

2.2.2.7 Log-in/Log-out

◆ Log-in / Log-out

Specifies the feature number used to join or leave an incoming call distribution group.

Value Range

Max. 4 digits (consisting of 0–9, *, and #)

PC Programming Manual References

11.5.1 PBX Configuration—[3-5-1] Group—Incoming Call Distribution Group—Group Settings

Feature Guide References

2.2.2.7 Log-in/Log-out

◆ Incoming Call Queue Monitor

Specifies the feature number, available only for extensions assigned as a supervisor, used to monitor the status of an incoming call distribution group with the extension display.

Value Range

Max. 4 digits (consisting of 0–9, *, and #)

PC Programming Manual References

11.5.1 PBX Configuration—[3-5-1] Group—Incoming Call Distribution Group—Group Settings—Miscellaneous—◆ Supervisor Extension Number

Feature Guide References

2.2.2.8 Supervisory Feature

◆ Hot Line (Pickup Dial) Program Set / Cancel

Specifies the feature number used to set/cancel the Hot Line feature, or programme the number to be automatically dialled.

Value Range

Max. 4 digits (consisting of 0–9, *, and #)

PC Programming Manual References

10.3 PBX Configuration—[2-3] System—Timers & Counters—Dial / IRNA / Recall / Tone—◆ Dial—Hot Line (Pickup Dial) Start (s)

Feature Guide References

2.6.6 Hot Line

◆ Absent Message Set / Cancel

Specifies the feature number used to set or cancel the display of an Absent Message.

Value Range

Max. 4 digits (consisting of 0–9, *, and #)

Feature Guide References

2.20.2 Absent Message

◆ BGM Set / Cancel

Specifies the feature number used to set or cancel the BGM heard through the telephone speaker while on-hook.

Value Range

Max. 4 digits (consisting of 0–9, *, and #)

PC Programming Manual References

10.2 PBX Configuration—[2-2] System—Operator & BGM

Feature Guide References

2.30.1 Background Music (BGM)

◆ Remote Timed Reminder (Remote Wakeup Call)

Specifies the feature number used to set or cancel a Timed Reminder remotely (Wake-up Call).

Value Range

Max. 4 digits (consisting of 0–9, *, and #)

Feature Guide References

2.24.4 Timed Reminder

◆ Timed Reminder Set / Cancel

Specifies the feature number used to set or cancel a Timed Reminder.

Value Range

Max. 4 digits (consisting of 0–9, *, and #)

Feature Guide References

2.24.4 Timed Reminder

◆ Printing Message

Specifies the feature number used to select a Printing Message to be output on SMDR.

Value Range

Max. 4 digits (consisting of 0–9, *, and #)

PC Programming Manual References

14.2 PBX Configuration—[6-2] Feature—Hotel & Charge—Main—◆ SMDR for External Hotel Application 2—Printing Message 1–8

Feature Guide References

2.22.2 Printing Message

◆ Extension Dial Lock Set / Cancel

Specifies the feature number used to lock or unlock an extension to make certain trunk calls and change the forwarding destination, using the Extension Dial Lock feature.

Value Range

Max. 4 digits (consisting of 0–9, *, and #)

Feature Guide References

2.7.3 Extension Dial Lock

◆ Time Service (Day / Lunch / Break / Night) Switch

Specifies the feature number, available for manager extensions, used to change the time mode manually.

Value Range

Max. 4 digits (consisting of 0–9, *, and #)

PC Programming Manual References

10.7.1 PBX Configuration—[2-7-1] System—Class of Service—COS Settings—Manager—◆ Time Service Switch
10.7.1 PBX Configuration—[2-7-1] System—Class of Service—COS Settings—Manager—◆ Manager

Feature Guide References

5.1.4 Time Service

◆ Remote Extension Dial Lock Off

Specifies the feature number, available for manager extensions, used to unlock other extensions using the Extension Dial Lock feature.

Value Range

Max. 4 digits (consisting of 0–9, *, and #)

PC Programming Manual References

10.7.1 PBX Configuration—[2-7-1] System—Class of Service—COS Settings—Manager—◆ Manager

Feature Guide References

2.7.3 Extension Dial Lock

◆ Remote Extension Dial Lock On

Specifies the feature number, available for manager extensions, used to lock other extensions using the Extension Dial Lock feature.

Value Range

Max. 4 digits (consisting of 0–9, *, and #)

PC Programming Manual References

10.7.1 PBX Configuration—[2-7-1] System—Class of Service—COS Settings—Manager—◆ Manager

Feature Guide References

2.7.3 Extension Dial Lock

◆ Extension Feature Clear

Specifies the feature number used to reset certain features of an extension to the default values.

Value Range

Max. 4 digits (consisting of 0–9, *, and #)

Feature Guide References

2.24.2 Extension Feature Clear

◆ Extension PIN Set / Cancel

Specifies the feature number used to set a PIN for an extension.

Value Range

Max. 4 digits (consisting of 0–9, *, and #)

Feature Guide References

2.24.1 Extension Personal Identification Number (PIN)

◆ Dial Information (CTI)

Specifies the feature number used to send dial information to the CTI feature instead of the PBX.

Value Range

Max. 4 digits (consisting of 0–9, *, and #)

Feature Guide References

2.26.1 Computer Telephony Integration (CTI)

◆ Conference Group Call Operation

Specifies the feature number used to make a conference group call.

Value Range

Max. 4 digits (consisting of 0–9, *, and #)

PC Programming Manual References

10.3 PBX Configuration—[2-3] System—Timers & Counters—Miscellaneous—◆ Conference Group Call—Ring Duration (s)
10.7.1 PBX Configuration—[2-7-1] System—Class of Service—COS Settings—Miscellaneous—◆ Conference Group Call Operation
11.9 PBX Configuration—[3-9] Group—Conference Group

Feature Guide References

2.15.1 Conference Group Call

◆ Centralised BLF Monitor Cancel

Specifies the feature number used to cancel monitoring of an extension using an NDSS button.

Value Range

Max. 4 digits (consisting of 0–9, *, and #)

PC Programming Manual References

17.1 PBX Configuration—[9-1] Private Network—TIE Table

Feature Guide References

4.2.5.1 Network Direct Station Selection (NDSS)

◆ Busy Out Cancel

Specifies the feature number used to cancel the Busy Out status of an analogue trunk.

Value Range

Max. 4 digits (consisting of 0–9, *, and #)

PC Programming Manual References

10.9 PBX Configuration—[2-9] System—System Options—Option 5—◆ Busy Out—Busy Out for Analogue CO

Feature Guide References

2.5.4.6 Trunk Busy Out

◆ Simplified Voice Message Access

Specifies the feature number used to access the SVM feature to record, listen to and delete messages.

Value Range

Max. 4 digits (consisting of 0–9, *, and #)

PC Programming Manual References

12.1.8 PBX Configuration-[4-1-8] Extension-Wired Extension-Simplified Voice Message
12.2.6 PBX Configuration-[4-2-6] Extension—Portable Station—Simplified Voice Message

Feature Guide References

2.16.3 Built-in Simplified Voice Message (SVM)

Other PBX Extension

Other PBX extension numbers can be used to easily call extensions connected to PBXs at different locations in a TIE line network. The leading numbers of all PBXs in the network that will be called should be entered in this table. A maximum of 16 leading numbers can be programmed.

◆ Dial

Specifies the leading extension number of the other PBX.

Value Range

Max. 3 digits (consisting of 0–9, *, and #)

PC Programming Manual References

17.1 PBX Configuration—[9-1] Private Network—TIE Table—◆ Leading Number

Feature Guide References

4.2.1 TIE Line Service

KX-T7710

The settings of the MESSAGE key and One-touch keys on the KX-T7710 can be programmed.

Note

- This tab is for programming extensions connected to Expansion Units. For information about setting up Expansion Units, see **9.32 PBX Configuration—[1-1] Configuration—Slot—Expansion Unit1/ Expansion Unit2/Expansion Unit3**.
- For further information about programming for KX-T7710 phones, refer to the 2.6.7 KX-T7710 One-touch Dialling in the Feature Guide.

◆ Dial

Indicates the DTMF tone dial required by the PBX to recognise it and dial the pre-programmed number for each key (reference only).

Value Range

B: For MESSAGE Key
A1: For One-touch Dial 01 Key
A2: For One-touch Dial 02 Key
A3: For One-touch Dial 03 Key
A4: For One-touch Dial 04 Key
A5: For One-touch Dial 05 Key
A6: For One-touch Dial 06 Key
A7: For One-touch Dial 07 Key
A8: For One-touch Dial 08 Key

◆ Message Key—Phone Number

Specifies the feature number or telephone number dialled when the MESSAGE key on the KX-T7710 is pressed. By default, this is set to the feature number used to call back a caller who left a message waiting indication, ◆ **Message Waiting Set / Cancel / Call Back**.
This is available only when the position of the Mode switch lever on the KX-T7710 is set to "PBX".

Value Range

Max. 32 digits (consisting of 0–9, *, #, T [Transfer], [ ] [Secret], P [Pause], and F [Flash])

PC Programming Manual References

10.6.1 PBX Configuration—[2-6-1] System—Numbering Plan—Main—Features—◆ Message Waiting Set / Cancel / Call Back

◆ One-touch Dial 01–08—Phone Number

Specifies the number dialled when a one-touch key on the KX-T7710 is pressed.
This is available only when the position of the Mode switch lever on the KX-T7710 is set to "PBX".

Value Range

Max. 32 digits (consisting of 0–9, *, #, T [Transfer], [ ] [Secret], P [Pause], and F [Flash])

10.6.2 PBX Configuration—[2-6-2] System—Numbering Plan—Quick Dial

Quick Dialling numbers are used to call extensions or outside parties, or access certain features without having to dial their full numbers. It is possible to register Quick Dialling numbers that overlap with other registered numbers (refer to "Automatic Rerouting of VoIP Calls to Public Trunks" in the Feature Guide).
For more information on flexible numbering, see "5.5.7 Flexible Numbering/Fixed Numbering" in the Feature Guide.

◆ Dial

Specifies the Quick Dialling number.

Value Range

1–4000: Max. 8 digits (consisting of 0–9, *, and #)

Feature Guide References

2.6.5 Quick Dialling
4.2.2 Voice over Internet Protocol (VoIP) Network
5.5.7 Flexible Numbering/Fixed Numbering

◆ Phone Number

Specifies the number to be dialled when the corresponding Quick Dialling number is used.

Value Range

Max. 32 digits (consisting of 0–9, *, #, T [Transfer], [ ] [Secret], P [Pause], and F [Flash])

Feature Guide References

2.6.5 Quick Dialling
4.2.2 Voice over Internet Protocol (VoIP) Network
5.5.7 Flexible Numbering/Fixed Numbering

10.6.3 PBX Configuration—[2-6-3] System—Numbering Plan—B/NA DND Call Feature

Feature numbers used to access various PBX features can be programmed. The following features are available while hearing a busy, DND, or ringback tone. Each feature must have a unique feature number. For more information on flexible numbering, see "5.5.7 Flexible Numbering/Fixed Numbering" in the Feature Guide.

◆ BSS / OHCA / Whisper OHCA / DND Override

Specifies the feature number used to notify a busy extension of a second call by Call Waiting, or call an extension in DND mode.

Value Range

1 digit (0–9, *, or #)

PC Programming Manual References

12.1.1 PBX Configuration—[4-1-1] Extension—Wired Extension—Extension Settings—Option 2—◆ Manual C. Waiting for Extension Call
12.2.1 PBX Configuration—[4-2-1] Extension—Portable Station—Extension Settings—Option 2—◆ Manual C. Waiting for Extension Call

Feature Guide References

2.1.3.3 Call Waiting
2.3.3 Do Not Disturb (DND)
2.10.4.2 Call Waiting Tone
2.10.4.4 Whisper OHCA

◆ Executive Busy Override

Specifies the feature number used to interrupt an existing call to establish a three-party conference call.

Value Range

1 digit (0–9, *, or #)

PC Programming Manual References

10.7.1 PBX Configuration—[2-7-1] System—Class of Service—COS Settings—Executive—◆ Executive Busy Override
12.1.1 PBX Configuration—[4-1-1] Extension—Wired Extension—Extension Settings—Option 3—◆ Executive Override Deny
12.2.1 PBX Configuration—[4-2-1] Extension—Portable Station—Extension Settings—Option 3—◆ Executive Override Deny

Feature Guide References

2.10.2 Executive Busy Override

◆ Alternate Calling - Ring / Voice

Specifies the feature number used to allow a caller to change the called extension's preset call receiving method to ring tone or voice.

Value Range

1 digit (0–9, *, or #)

Feature Guide References

2.5.3 Intercom Call

◆ Message Waiting Set

Specifies the feature number used to leave a Message Waiting notification.

Value Range

1 digit (0–9, *, or #)

Feature Guide References

2.20.1 Message Waiting

◆ Call Monitor

Specifies the feature number used to listen to a busy extension's conversation.

Value Range

1 digit (0–9, *, or #)

PC Programming Manual References

10.7.1 PBX Configuration—[2-7-1] System—Class of Service—COS Settings—Executive—◆ Call Monitor
12.1.1 PBX Configuration—[4-1-1] Extension—Wired Extension—Extension Settings—Option 3—◆ Executive Override Deny
12.2.1 PBX Configuration—[4-2-1] Extension—Portable Station—Extension Settings—Option 3—◆ Executive Override Deny

Feature Guide References

2.10.3 Call Monitor

◆ Automatic Callback Busy

Specifies the feature number used to reserve a busy line and receive callback ringing when the line becomes idle.

Value Range

1 digit (0–9, *, or #)

Feature Guide References

2.10.1 Automatic Callback Busy (Camp-on)

◆ BSS / OHCA / Whisper OHCA / DND Override-2

Specifies the feature number used to notify a busy extension of a second call by Call Waiting, or call an extension in DND mode. This is the same setting as ◆ **BSS / OHCA / Whisper OHCA / DND Override** on this screen, and can be used to provide two methods of activating the specified features. This can be useful, for example, if users prefer to use a separate feature number to activate DND Override.

Value Range

1 digit (0–9, *, or #)

PC Programming Manual References

12.1.1 PBX Configuration—[4-1-1] Extension—Wired Extension—Extension Settings—Option 2—◆ Manual C. Waiting for Extension Call
12.2.1 PBX Configuration—[4-2-1] Extension—Portable Station—Extension Settings—Option 2—◆ Manual C. Waiting for Extension Call

Feature Guide References

2.1.3.3 Call Waiting
2.3.3 Do Not Disturb (DND)
2.10.4.2 Call Waiting Tone
2.10.4.4 Whisper OHCA

10.7 PBX Configuration—[2-7] System—Class of Service

10.7.1 PBX Configuration—[2-7-1] System—Class of Service—COS Settings

Each extension, doorphone port, incoming call distribution group, and trunk group is assigned a Class of Service (COS). Certain features can be programmed to behave differently depending on the COS. A maximum of 64 COS levels can be programmed.

TRS

Restrictions to features related to making trunk calls can be programmed for each COS.

◆ COS Name

Specifies the name of the COS.

Value Range

Max. 20 characters

Feature Guide References

5.1.1 Class of Service (COS)

◆ TRS Level—Day, Lunch, Break, Night

Specifies the Toll Restriction (TRS)/Call Barring (Barring) level for making trunk calls in each time mode.

Value Range

1: Allows all trunk calls
2–6: Restricts trunk calls according to the combination of the Denied and Exception Code Tables
7: Restricts all trunk calls

PC Programming Manual References

10.4 PBX Configuration—[2-4] System—Week Table
11.1.1 PBX Configuration—[3-1-1] Group—Trunk Group—TRG Settings—Main—◆ COS
11.5.1 PBX Configuration—[3-5-1] Group—Incoming Call Distribution Group—Group Settings—Main—◆ COS
12.1.1 PBX Configuration—[4-1-1] Extension—Wired Extension—Extension Settings—Main—◆ COS
12.2.1 PBX Configuration—[4-2-1] Extension—Portable Station—Extension Settings—Main—◆ COS
13.1 PBX Configuration—[5-1] Optional Device—Doorphone—◆ COS
15.1 PBX Configuration—[7-1] TRS—Denied Code
15.2 PBX Configuration—[7-2] TRS—Exception Code

Feature Guide References

2.7.1 Toll Restriction (TRS)/Call Barring (Barring)

◆ TRS Level on Extension Lock

Specifies the TRS/Barring level for making trunk calls when an extension is locked using the Extension Dial Lock feature.

Value Range

1: Allows all trunk calls
2–6: Restricts trunk calls according to the combination of the Denied and Exception Code Tables
7: Restricts all trunk calls

PC Programming Manual References

12.1.1 PBX Configuration—[4-1-1] Extension—Wired Extension—Extension Settings—Main—◆ COS
12.2.1 PBX Configuration—[4-2-1] Extension—Portable Station—Extension Settings—Main—◆ COS
15.1 PBX Configuration—[7-1] TRS—Denied Code
15.2 PBX Configuration—[7-2] TRS—Exception Code

Feature Guide References

2.7.3 Extension Dial Lock

◆ TRS Level for System Speed Dialling

Specifies the TRS/Barring level for making a trunk call using System Speed Dialling numbers, which overrides the TRS/Barring set for the current time mode.

Value Range

1: Allows all trunk calls
2–6: Restricts trunk calls according to the combination of the Denied and Exception Code Tables
7: Restricts all trunk calls

PC Programming Manual References

12.1.1 PBX Configuration—[4-1-1] Extension—Wired Extension—Extension Settings—Main—◆ COS
12.2.1 PBX Configuration—[4-2-1] Extension—Portable Station—Extension Settings—Main—◆ COS
14.1 PBX Configuration—[6-1] Feature—System Speed Dial
15.5 PBX Configuration—[7-5] TRS—Miscellaneous—◆ TRS Override by System Speed Dialling

Feature Guide References

2.6.4 Speed Dialling—Personal/System
2.7.1 Toll Restriction (TRS)/Call Barring (Barring)

CO & SMDR

◆ COS Name

Specifies the name of the COS.

Value Range

Max. 20 characters

Feature Guide References

5.1.1 Class of Service (COS)

◆ Extension-CO Line Call Duration Limit

Enables the extension-to-trunk call duration feature. The maximum call duration can be set using ◆ **Extension-CO Duration Time (*60s)** on **11.1.1 PBX Configuration—[3-1-1] Group—Trunk Group—TRG Settings**.

Value Range

Disable, Enable

PC Programming Manual References

10.9 PBX Configuration—[2-9] System—System Options—Option 2—◆ Extension - CO Call Limitation—For Incoming Call
11.1.1 PBX Configuration—[3-1-1] Group—Trunk Group—TRG Settings—Main—◆ COS
12.1.1 PBX Configuration—[4-1-1] Extension—Wired Extension—Extension Settings—Main—◆ COS
12.2.1 PBX Configuration—[4-2-1] Extension—Portable Station—Extension Settings—Main—◆ COS

Feature Guide References

2.11.8 Trunk Call Limitation

◆ Transfer to CO

Enables the transferring of calls to trunks.

Value Range

Disable, Enable

PC Programming Manual References

12.1.1 PBX Configuration—[4-1-1] Extension—Wired Extension—Extension Settings—Main—◆ COS
12.2.1 PBX Configuration—[4-2-1] Extension—Portable Station—Extension Settings—Main—◆ COS

Feature Guide References

2.12.1 Call Transfer

◆ Call Forward to CO

Enables the forwarding of calls to trunks.

Value Range

Disable, Enable

PC Programming Manual References

12.1.1 PBX Configuration—[4-1-1] Extension—Wired Extension—Extension Settings—Main—◆ COS
12.1.2 PBX Configuration—[4-1-2] Extension—Wired Extension—FWD/DND
12.2.1 PBX Configuration—[4-2-1] Extension—Portable Station—Extension Settings—Main—◆ COS

12.2.2 PBX Configuration—[4-2-2] Extension—Portable Station—FWD/DND

Feature Guide References

2.3.2 Call Forwarding (FWD)

◆ Account Code Mode

Specifies whether the entry of an account code is optional or mandatory when making a trunk call.

Value Range

Option, Forced

PC Programming Manual References

12.1.1 PBX Configuration—[4-1-1] Extension—Wired Extension—Extension Settings—Main—◆ COS
12.2.1 PBX Configuration—[4-2-1] Extension—Portable Station—Extension Settings—Main—◆ COS

Feature Guide References

2.5.4.3 Account Code Entry

◆ Outgoing CO Call Printout (SMDR)

Enables the automatic recording of information about outgoing trunk calls on SMDR.

Value Range

Disable, Enable

PC Programming Manual References

12.1.1 PBX Configuration—[4-1-1] Extension—Wired Extension—Extension Settings—Main—◆ COS
12.2.1 PBX Configuration—[4-2-1] Extension—Portable Station—Extension Settings—Main—◆ COS
19.1 PBX Configuration—[11-1] Maintenance—Main

Feature Guide References

2.22.1.1 Station Message Detail Recording (SMDR)

Assistant

◆ COS Name

Specifies the name of the COS.

Value Range

Max. 20 characters

Feature Guide References

5.1.1 Class of Service (COS)

◆ Call Pickup by DSS

Enables using a DSS button to pick up a call to a specified extension.

Value Range

Disable, Enable

PC Programming Manual References

12.1.1 PBX Configuration—[4-1-1] Extension—Wired Extension—Extension Settings—Main—◆ COS
12.1.4 PBX Configuration—[4-1-4] Extension—Wired Extension—Flexible Button
12.2.1 PBX Configuration—[4-2-1] Extension—Portable Station—Extension Settings—Main—◆ COS
12.2.3 PBX Configuration—[4-2-3] Extension—Portable Station—Flexible Button

Feature Guide References

2.4.3 Call Pickup

◆ DND Override

Enables making a call to an extension in DND mode by entering the feature number.

Value Range

Disable, Enable

PC Programming Manual References

12.1.1 PBX Configuration—[4-1-1] Extension—Wired Extension—Extension Settings—Main—◆ COS
12.1.2 PBX Configuration—[4-1-2] Extension—Wired Extension—FWD/DND
12.2.1 PBX Configuration—[4-2-1] Extension—Portable Station—Extension Settings—Main—◆ COS
12.2.2 PBX Configuration—[4-2-2] Extension—Portable Station—FWD/DND

Feature Guide References

2.3.3 Do Not Disturb (DND)

◆ OHCA / Whisper OHCA

Enables using OHCA/Whisper OHCA as a method of second call notification by entering the feature number.

Value Range

Disable, Enable

PC Programming Manual References

12.1.1 PBX Configuration—[4-1-1] Extension—Wired Extension—Extension Settings—Main—◆ COS
12.2.1 PBX Configuration—[4-2-1] Extension—Portable Station—Extension Settings—Main—◆ COS

Feature Guide References

2.10.4 Second Call Notification to Busy Extension
2.10.4.4 Whisper OHCA

◆ Transfer to busy Extension w/o BSS Operation

Enables a transferred call to be queued when the transfer destination is busy.

Value Range

Disable: The call is not transferred. (If the transfer destination has enabled the call waiting notification feature, it is possible to inform the destination about the call transfer.)
Enable: The transferred call is queued for the time period specified in ◆ **Recall—Transfer Recall (s)** in **10.3 PBX Configuration—[2-3] System—Timers & Counters**.

PC Programming Manual References

10.3 PBX Configuration—[2-3] System—Timers & Counters—◆ Recall—Transfer Recall (s)

Feature Guide References

2.12.1 Call Transfer

◆ Automatic Answer (Caller)

Enables a caller to have calls automatically answered when the destination has set Hands-free Answerback.

Value Range

Disable: Even if the destination has set Hands-free Answerback, the call will not be automatically answered.
Enable: The call will be automatically answered.

Feature Guide References

2.4.4 Hands-free Answerback

Executive

◆ COS Name

Specifies the name of the COS.

Value Range

Max. 20 characters

Feature Guide References

5.1.1 Class of Service (COS)

◆ Call Monitor

Enables listening to a busy extension's conversation.

Value Range

Disable, Enable

PC Programming Manual References

12.1.1 PBX Configuration—[4-1-1] Extension—Wired Extension—Extension Settings—Main—◆ COS

12.2.1 PBX Configuration—[4-2-1] Extension—Portable Station—Extension Settings—Main—◆ COS

Feature Guide References

2.10.3 Call Monitor

◆ Executive Busy Override

Enables interrupting an existing call to establish a three-party conference call.

Value Range

Disable, Enable

PC Programming Manual References

12.1.1 PBX Configuration—[4-1-1] Extension—Wired Extension—Extension Settings—Main—◆ COS
12.2.1 PBX Configuration—[4-2-1] Extension—Portable Station—Extension Settings—Main—◆ COS

Feature Guide References

2.10.2 Executive Busy Override

◆ Executive Busy Override Deny

Enables preventing other extensions from interrupting calls.

Value Range

Disable, Enable

PC Programming Manual References

12.1.1 PBX Configuration—[4-1-1] Extension—Wired Extension—Extension Settings—Main—◆ COS
12.2.1 PBX Configuration—[4-2-1] Extension—Portable Station—Extension Settings—Main—◆ COS

Feature Guide References

5.1.1 Class of Service (COS)

Manager

◆ COS Name

Specifies the name of the COS.

Value Range

Max. 20 characters

Feature Guide References

5.1.1 Class of Service (COS)

◆ Group Forward Set

Enables setting call forwarding for calls to an incoming call distribution group.

Value Range

Disable: An extension cannot set call forwarding for any group.
Enable-All: An extension can set call forwarding for all groups.
Enable-Group: An extension can only set call forwarding for the group to which the extension belongs.

PC Programming Manual References

11.5.1.1 PBX Configuration—[3-5-1] Group—Incoming Call Distribution Group—Group Settings—Member List
12.1.1 PBX Configuration—[4-1-1] Extension—Wired Extension—Extension Settings—Main—◆ COS
12.2.1 PBX Configuration—[4-2-1] Extension—Portable Station—Extension Settings—Main—◆ COS

Feature Guide References

2.3.2 Call Forwarding (FWD)

◆ PT Programming Mode Level

Specifies the level of authorisation for performing PT programming.

Value Range

Disable: A PT user cannot perform any programming.
PROG Only: A PT user can perform only personal programming.
PROG **/*#: A PT user can perform Administrator level and User level programming.

PC Programming Manual References

12.1.1 PBX Configuration—[4-1-1] Extension—Wired Extension—Extension Settings—Main—◆ COS
12.2.1 PBX Configuration—[4-2-1] Extension—Portable Station—Extension Settings—Main—◆ COS

Feature Guide References

5.5.3 PT Programming

◆ Manager

Specifies the authorisation to use manager features.

Value Range

Disable, Enable

PC Programming Manual References

12.1.1 PBX Configuration—[4-1-1] Extension—Wired Extension—Extension Settings—Main—◆ COS
12.2.1 PBX Configuration—[4-2-1] Extension—Portable Station—Extension Settings—Main—◆ COS

Feature Guide References

5.1.6 Manager Features

◆ Time Service Switch

Enables manual switching of time modes.

Value Range

Disable, Enable

PC Programming Manual References

10.4 PBX Configuration—[2-4] System—Week Table
12.1.1 PBX Configuration—[4-1-1] Extension—Wired Extension—Extension Settings—Main—◆ COS
12.2.1 PBX Configuration—[4-2-1] Extension—Portable Station—Extension Settings—Main—◆ COS

Feature Guide References

5.1.4 Time Service

PDN/SDN

An SDN button allows a PT user to see the current status of the corresponding PDN extension, and to pick up or transfer calls to that extension easily. The settings here control how SDN buttons operate for extensions at each COS level.

◆ COS Name

Specifies the name of the COS.

Value Range

Max. 20 characters

Feature Guide References

5.1.1 Class of Service (COS)

◆ SDN Key Mode

Selects what happens when an extension user presses an SDN button while on hook.

Value Range

Enhanced DSS: The registered (owner) extension is called.
Standard SDN: A dial tone is heard.

Feature Guide References

2.9.1 Primary Directory Number (PDN)/Secondary Directory Number (SDN) Extension

◆ Making call by COS of SDN key's owner

Selects whether an extension that uses an SDN button to make calls is given the COS of the SDN button's registered (owner) extension.
This setting is only available when ◆ **SDN Key Mode** above is set to "Standard SDN".

Value Range

Disable, Enable

PC Programming Manual References

10.7.1 PBX Configuration—[2-7-1] System—Class of Service—COS Settings—PDN/SDN—◆ COS Name

Feature Guide References

2.9.1 Primary Directory Number (PDN)/Secondary Directory Number (SDN) Extension

◆ SDN Key Assignment by PT Program

Selects whether PT users can create SDN buttons on their own extensions using PT programming.

Value Range

Disable, Enable

Feature Guide References

2.9.1 Primary Directory Number (PDN)/Secondary Directory Number (SDN) Extension

Optional Device & Other Extensions

◆ COS Name

Specifies the name of the COS.

Value Range

Max. 20 characters

Feature Guide References

5.1.1 Class of Service (COS)

◆ Door Unlock

Enables using the door opener feature.

Value Range

Disable, Enable

PC Programming Manual References

12.1.1 PBX Configuration—[4-1-1] Extension—Wired Extension—Extension Settings—Main—◆ COS
12.2.1 PBX Configuration—[4-2-1] Extension—Portable Station—Extension Settings—Main—◆ COS

Feature Guide References

2.18.2 Door Open

◆ External Relay Access

Enables access to external relays.

Value Range

Disable, Enable

PC Programming Manual References

13.4 PBX Configuration—[5-4] Optional Device—External Relay

Feature Guide References

2.18.4 External Relay Control

◆ Accept the Call from DISA

Enables reception of calls from DISA.

Value Range

Disable, Enable

PC Programming Manual References

12.1.1 PBX Configuration—[4-1-1] Extension—Wired Extension—Extension Settings—Main—◆ COS
12.2.1 PBX Configuration—[4-2-1] Extension—Portable Station—Extension Settings—Main—◆ COS
13.3.2 PBX Configuration—[5-3-2] Optional Device—Voice Message—DISA Message

Feature Guide References

2.16.1 Direct Inward System Access (DISA)

◆ Remote Operation by Other Extension

Allows the Walking COS feature to be used from a remote location (inside the PBX, or outside the PBX using DISA).

Value Range

Allow, Deny

PC Programming Manual References

12.1.1 PBX Configuration—[4-1-1] Extension—Wired Extension—Extension Settings—Main—◆ COS
12.2.1 PBX Configuration—[4-2-1] Extension—Portable Station—Extension Settings—Main—◆ COS

Feature Guide References

2.7.5 Walking COS

◆ Accept Wireless XDP Parallel Mode Set by PS

Allows Wireless XDP Parallel Mode to be set by a PS.

Value Range

Allow, Deny

PC Programming Manual References

12.1.1 PBX Configuration—[4-1-1] Extension—Wired Extension—Extension Settings—Main—◆ COS

CA

◆ COS Name

Specifies the name of the COS.

Value Range

Max. 20 characters

Feature Guide References

5.1.1 Class of Service (COS)

◆ CA Chat

Enables the chat feature when using Communication Assistant (CA) Client.

Value Range

Disable, Enable

PC Programming Manual References

10.7.1 PBX Configuration—[2-7-1] System—Class of Service—COS Settings—CA—◆ CA ICD Group Log Out

◆ CA ICD Group Log Out

Enables logging out of ICD groups when using Communication Assistant (CA) Client.

Value Range

Disable, Enable

PC Programming Manual References

10.7.1 PBX Configuration—[2-7-1] System—Class of Service—COS Settings—CA—◆ CA Chat

Miscellaneous

◆ COS Name

Specifies the name of the COS.

Value Range

Max. 20 characters

Feature Guide References

5.1.1 Class of Service (COS)

◆ Conference Group Call Operation

Enables making conference group calls.

Value Range

Disable, Enable

PC Programming Manual References

10.3 PBX Configuration—[2-3] System—Timers & Counters—Miscellaneous—◆ Conference Group Call—Ring Duration (s)
10.6.1 PBX Configuration—[2-6-1] System—Numbering Plan—Main—Features—◆ Conference Group Call Operation
11.9 PBX Configuration—[3-9] Group—Conference Group

Feature Guide References

2.15.1 Conference Group Call

◆ Accept a collect call (for Brazil)

Enables accepting collect calls.

Value Range

Disable, Enable

10.7.2 PBX Configuration—[2-7-2] System—Class of Service—External Call Block

Each COS can have different trunk groups available for making trunk calls, depending on the time mode (day/lunch/break/night). Select the desired time mode from the list.

◆ Outgoing Trunk Group 1–64

Specifies the available trunk groups.

Value Range

Block (blue), Non Block

PC Programming Manual References

10.4 PBX Configuration—[2-4] System—Week Table
12.1.1 PBX Configuration—[4-1-1] Extension—Wired Extension—Extension Settings
12.2.1 PBX Configuration—[4-2-1] Extension—Portable Station—Extension Settings
18.1 PBX Configuration—[10-1] CO & Incoming Call—CO Line Settings

Feature Guide References

2.5.5.3 Trunk Access

10.7.3 PBX Configuration—[2-7-3] System—Class of Service—Internal Call Block

Internal Call Block determines the restrictions placed on making intercom calls. The extensions, incoming call distribution groups, and doorphones belonging to a certain COS can be programmed to not receive intercom calls from those belonging to a certain COS.

◆ COS Number of the Extension Which Receive the Call from Other Extension 1–64

Specifies the combinations of COS levels for which intercom calls are blocked.

Value Range

Block (blue), Non Block

PC Programming Manual References

11.5.1 PBX Configuration—[3-5-1] Group—Incoming Call Distribution Group—Group Settings—Main—◆ COS
12.1.1 PBX Configuration—[4-1-1] Extension—Wired Extension—Extension Settings—Main—◆ COS
12.2.1 PBX Configuration—[4-2-1] Extension—Portable Station—Extension Settings—Main—◆ COS
13.1 PBX Configuration—[5-1] Optional Device—Doorphone—◆ COS

Feature Guide References

2.1.2.2 Internal Call Block

10.8 PBX Configuration—[2-8] System—Ring Tone Patterns

10.8.1 PBX Configuration—[2-8-1] System—Ring Tone Patterns—Call from CO

Different ring tone patterns can be selected for incoming trunk calls depending on the trunk group that the calls are received on. A maximum of 8 Ring Tone Pattern Tables can be programmed, and any pattern table can be selected for use by an extension.

◆ Ring Tone Pattern Plan 1–8

Specifies the ring tone pattern for incoming trunk calls.

Value Range

Single, Double, Triple, Option1, Option2

PC Programming Manual References

18.1 PBX Configuration—[10-1] CO & Incoming Call—CO Line Settings—◆ Trunk Group Number
12.1.1 PBX Configuration—[4-1-1] Extension—Wired Extension—Extension Settings—Option 1—◆ Ring Pattern Table
12.2.1 PBX Configuration—[4-2-1] Extension—Portable Station—Extension Settings—Option 1—◆ Ring Pattern Table

Feature Guide References

2.1.3.2 Ring Tone Pattern Selection

10.8.2 PBX Configuration—[2-8-2] System—Ring Tone Patterns—Call from DOORPHONE

Different ring tone patterns can be selected for incoming doorphone calls depending on the doorphone port that the calls originate from. A maximum of 8 Ring Tone Pattern Tables can be programmed, and any pattern table can be selected for use by an extension.

◆ Ring Tone Pattern Plan 1–8

Specifies the ring tone pattern for incoming doorphone calls.

Value Range

Single, Double, Triple, S-Double, Option 1, Option 2

PC Programming Manual References

12.1.1 PBX Configuration—[4-1-1] Extension—Wired Extension—Extension Settings—Option 1—◆ Ring Pattern Table
12.2.1 PBX Configuration—[4-2-1] Extension—Portable Station—Extension Settings—Option 1—◆ Ring Pattern Table
13.1 PBX Configuration—[5-1] Optional Device—Doorphone

Feature Guide References

2.1.3.2 Ring Tone Pattern Selection
2.18.1 Doorphone Call

10.8.3 PBX Configuration—[2-8-3] System—Ring Tone Patterns—Call from Others

Different ring tone patterns can be selected for incoming intercom calls and ringing triggered by certain PBX features (Timed Reminder, Call Back, and Live Call Screening). A maximum of 8 Ring Tone Pattern Tables can be programmed, and any pattern table can be selected for use by an extension.
For more information on ring tone patterns, see "2.1.3.2 Ring Tone Pattern Selection" in the Feature Guide.

◆ Extension—Ring Tone Pattern Plan 1–8

Specifies the ring tone pattern for incoming intercom calls.

Value Range

Single, Double, Triple, Option 1, Option 2

PC Programming Manual References

12.1.1 PBX Configuration—[4-1-1] Extension—Wired Extension—Extension Settings—Option 1—◆ Ring Pattern Table
12.2.1 PBX Configuration—[4-2-1] Extension—Portable Station—Extension Settings—Option 1—◆ Ring Pattern Table

◆ Timed Reminder—Ring Tone Pattern Plan 1–8

Specifies the ring tone pattern for Timed Reminder alarms.

Value Range

Single, Double, Triple, Option 1, Option 2

PC Programming Manual References

12.1.1 PBX Configuration—[4-1-1] Extension—Wired Extension—Extension Settings—Option 1—◆ Ring Pattern Table
12.2.1 PBX Configuration—[4-2-1] Extension—Portable Station—Extension Settings—Option 1—◆ Ring Pattern Table

◆ Call Back—Ring Tone Pattern Plan 1–8

Specifies the ring tone pattern for callback ringing by Automatic Callback Busy.

Value Range

Single, Double, Triple, S-Double, Option 1, Option 2

PC Programming Manual References

12.1.1 PBX Configuration—[4-1-1] Extension—Wired Extension—Extension Settings—Option 1—◆ Ring Pattern Table
12.2.1 PBX Configuration—[4-2-1] Extension—Portable Station—Extension Settings—Option 1—◆ Ring Pattern Table

◆ Live Call Screening—Ring Tone Pattern Plan 1–8

Specifies the ring tone pattern for LCS warning tones.

Value Range

Single, Double, Triple, Option 1, Option 2

PC Programming Manual References

12.1.1 PBX Configuration—[4-1-1] Extension—Wired Extension—Extension Settings—Option 1—◆ Ring Pattern Table
12.2.1 PBX Configuration—[4-2-1] Extension—Portable Station—Extension Settings—Option 1—◆ Ring Pattern Table

◆ External Sensor—Ring Tone Pattern Plan 1–8

Specifies the ring tone pattern for calls from an external sensor.

Value Range

Single, Double, Triple, Option 1, Option 2

PC Programming Manual References

12.1.1 PBX Configuration—[4-1-1] Extension—Wired Extension—Extension Settings—Option 1—◆ Ring Pattern Table
12.2.1 PBX Configuration—[4-2-1] Extension—Portable Station—Extension Settings—Option 1—◆ Ring Pattern Table

10.9 PBX Configuration—[2-9] System—System Options

Various system settings can be programmed.

Option 1

◆ PT LCD—Date Display

Selects the order that the month and date are shown on the displays of extensions.

Value Range

Date-Month, Month-Date

◆ PT LCD—Time Display

Selects the time format shown on the displays of extensions. The time display format assigned here applies when setting the Timed Reminder feature.

Value Range

12H, 24H

Feature Guide References

2.24.4 Timed Reminder

◆ PT LCD—Password / PIN Display

Selects whether passwords and PINs (Personal Identification Number) are hidden or shown on the displays of extensions while being entered.

Value Range

Hide, Display

Feature Guide References

2.24.1 Extension Personal Identification Number (PIN)

◆ PT Fwd / DND—Fwd LED

Selects the light pattern of the FWD/DND button while the FWD feature is activated.

Value Range

On (Solid): Red on
Flash: Slow red flashing

PC Programming Manual References

12.1.2 PBX Configuration—[4-1-2] Extension—Wired Extension—FWD/DND
12.2.2 PBX Configuration—[4-2-2] Extension—Portable Station—FWD/DND

Feature Guide References

2.3.1 Call Forwarding (FWD)/Do Not Disturb (DND)—SUMMARY
2.21.3 LED Indication

◆ PT Fwd / DND—DND LED

Selects the light pattern of the FWD/DND button while the DND feature is activated.

Value Range

On (Solid): Red on
Flash: Slow red flashing

PC Programming Manual References

12.1.2 PBX Configuration—[4-1-2] Extension—Wired Extension—FWD/DND
12.2.2 PBX Configuration—[4-2-2] Extension—Portable Station—FWD/DND

Feature Guide References

2.3.1 Call Forwarding (FWD)/Do Not Disturb (DND)—SUMMARY
2.21.3 LED Indication

◆ PT Fwd / DND—Fwd/DND key mode when Idle

Selects the function of the FWD/DND button (fixed button) when it is pressed in idle status. (A FWD/DND button customised on a flexible button is always in FWD/DND Cycle Switch mode, and the mode cannot be changed.)

Value Range

FWD/DND Setting Mode: Enter programming mode for the FWD/DND setting.
FWD/DND Cycle Switch: Switch the FWD on/DND on/Off mode instead of entering the programming mode for the FWD/DND setting. (When there are separate FWD/DND settings for calls from trunks and calls from extensions, mode switching cannot be performed.)

PC Programming Manual References

12.1.2 PBX Configuration—[4-1-2] Extension—Wired Extension—FWD/DND
12.2.2 PBX Configuration—[4-2-2] Extension—Portable Station—FWD/DND

Feature Guide References

2.3.1 Call Forwarding (FWD)/Do Not Disturb (DND)—SUMMARY

◆ PT Fwd / DND—Paging to DND Extension

Specifies whether extensions can receive paging when in DND mode.

Value Range

Do Not Page, Page

PC Programming Manual References

12.1.2 PBX Configuration—[4-1-2] Extension—Wired Extension—FWD/DND

12.2.2 PBX Configuration—[4-2-2] Extension—Portable Station—FWD/DND
11.4 PBX Configuration—[3-4] Group—Paging Group

Feature Guide References

2.17.1 Paging

◆ PT Operation—Off Hook Monitor

Enables the use of Off-Hook Monitor with D-PTs and IP-PTs.

Value Range

Disable: The PT user's voice is sent through the handsfree microphone. The other party's voice is heard through the hands-free speaker.
Enable: The PT user's voice is sent through the handset microphone. The other party's voice is heard through both the hands-free speaker and the handset.

Feature Guide References

2.11.2 Off-hook Monitor

◆ PT Operation—Privacy Release by SCO key

Selects the function of the S-CO button during a trunk call.

Value Range

Enable: Pressing the S-CO button activates the Privacy Release feature
Disable: Pressing the S-CO button switches the information shown on the PT display.

Feature Guide References

2.14.3 Privacy Release

◆ PT Operation—One-touch Busy Override by SCO key

Specifies whether calls in progress can be joined (Executive Busy Override) simply by pressing the S-CO button.

Value Range

Enable, Disable

Feature Guide References

2.10.2 Executive Busy Override

◆ PT Operation—JOG Dial Speed

Selects the speed at which items scroll on the display when the Jog Dial is used.

Value Range

Normal, High Speed

◆ PT Operation—PT Ring Off Setting

Specifies whether incoming call ringing can be turned off at individual extensions. If disabled, users cannot prevent incoming calls from ringing.

Value Range

Disable, Enable

Feature Guide References

2.1.3.2 Ring Tone Pattern Selection

◆ PT Operation—Automatic Answer for Call from CO after

Specifies the number of times a PT in Hands-free Answerback mode will ring before a conversation is established automatically when it receives a call from a trunk.

Value Range

No Ring, 1 Ring, 2 Rings, 3 Rings

Feature Guide References

2.4.4 Hands-free Answerback

◆ PT Operation—Automatic Hold by ICM / CO / ICD Group Key

Selects whether calls are disconnected or held when an INTERCOM, PDN, CO, or ICD Group button is pressed while having a conversation.

Value Range

Disable (Disconnect), Enable

PC Programming Manual References

12.1.4 PBX Configuration—[4-1-4] Extension—Wired Extension—Flexible Button
12.2.3 PBX Configuration—[4-2-3] Extension—Portable Station—Flexible Button

Feature Guide References

2.13.1 Call Hold

◆ PT Operation—Hold key mode

Selects which extensions can retrieve a held call or a call that is transferred by Call Transfer without Announcement feature.

Value Range

Hold: Any extension can retrieve a held call.
Exclusive Hold: Only the holding extension can retrieve a held call.

Feature Guide References

2.13.1 Call Hold

Option 2

◆ Extension Clear—Call Waiting

Specifies whether the Call Waiting setting is cleared when Extension Feature Clear is performed.

Value Range

Clear, Do not clear

Feature Guide References

2.24.2 Extension Feature Clear

◆ Extension Clear—Fwd/DND

Specifies whether the FWD/DND setting is cleared when Extension Feature Clear is performed.

Value Range

Clear, Do not clear

Feature Guide References

2.24.2 Extension Feature Clear

◆ Extension Clear—Hot Line (Pick-up Dial)

Specifies whether the Hot Line setting is cleared when Extension Feature Clear is performed.

Value Range

Clear, Do not clear

Feature Guide References

2.24.2 Extension Feature Clear

◆ CODEC—System CODEC

Selects the codec type for PSs.

Value Range

A-Law, Mu-Law

◆ CODEC—Network CODEC

Selects the codec type for ISDN lines.

Value Range

A-Law, Mu-Law

◆ CODEC—Priority Notification from SIP Network (for Incoming Call)

Specifies whether the priority notification from the SIP network is used in place of the PBX's codec priority for SIP trunks.

Value Range

Enable, Disable

◆ ISDN en Bloc Dial—[#] as End of Dial for en Bloc mode

Specifies whether to automatically send "#" as an end code when dialling to an ISDN line; if used as the end code, "#" will not be dialled out as part of a number even when the "#" key is pressed.

Value Range

Enable, Disable

PC Programming Manual References

9.26 PBX Configuration—[1-1] Configuration—Slot—Port Property - PRI Port—CO Setting—◆ ISDN Outgoing Call Type

Feature Guide References

4.1.2.1 Integrated Services Digital Network (ISDN)—SUMMARY

◆ Redial—Automatic Redial when No Answer (ISDN)

Selects whether Automatic Redial to an ISDN line is performed when the called party does not answer within a pre-programmed time period.

Value Range

Disable, Enable

PC Programming Manual References

10.3 PBX Configuration—[2-3] System—Timers & Counters—◆ Automatic Redial—Redial Call Ring Duration (x10s)

Feature Guide References

2.6.3 Last Number Redial

◆ Redial—Automatic Redial for Analogue CO

Selects whether Automatic Redial to an analogue trunk is performed when the called party does not answer within a pre-programmed time period.

Value Range

Enable, Disable

PC Programming Manual References

10.3 PBX Configuration—[2-3] System—Timers & Counters—◆ Automatic Redial—Redial Call Ring Duration (x10s)

Feature Guide References

2.6.3 Last Number Redial

◆ Redial—Save Dial After Connection to Redial Memory

Specifies whether any digits dialled after the called party answers (for example, to access a specific extension within another company) are also saved as part of the redial number.

Value Range

Enable, Disable

Feature Guide References

2.6.3 Last Number Redial

◆ Redial—Call Log by Redial key

Enables display of the Outgoing Call Log on a display PT by pressing the REDIAL button while on hook.

Value Range

Enable, Disable

Feature Guide References

2.6.3 Last Number Redial

◆ Extension - CO Call Limitation—For Incoming Call

Selects whether the time limit for extension-to-trunk calls applies to outgoing calls only or for both outgoing and incoming calls. COS determines the use of this feature, and the length of the time limit can be assigned on a trunk group basis.

Value Range

Enable, Disable

PC Programming Manual References

10.7.1 PBX Configuration—[2-7-1] System—Class of Service—COS Settings—CO & SMDR—◆ Extension-CO Line Call Duration Limit
11.1.1 PBX Configuration—[3-1-1] Group—Trunk Group—TRG Settings—Main—◆ Extension-CO Duration Time (*60s)

Feature Guide References

2.11.8 Trunk Call Limitation

◆ CO - CO Call Limitation—After Conference

Selects whether to allow a call between 2 outside destinations to continue after the originator of the conference has left the conference.

Value Range

Enable: The call will be disconnected.
Disable: The call will continue.

Feature Guide References

2.14.2 Conference
4.2.5 QSIG Enhanced Features

◆ Applying logical partitioning

Enables the Logical Partitioning feature. If you select **Enable**, the following calls are restricted.

1. Legacy trunk and IP trunk calls.

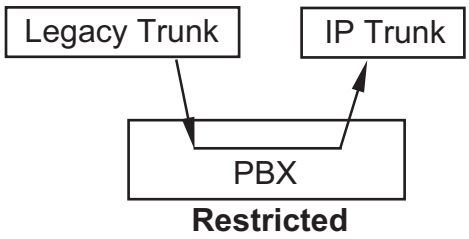

2. "TIE to CO" and "TIE to TIE" calls through KX-NS300s with a different area ID for Logical Partitioning programmed in 9.2 PBX Configuration—[1-1] Configuration—Slot—System Property—Main—◆ Area ID for logical partition.

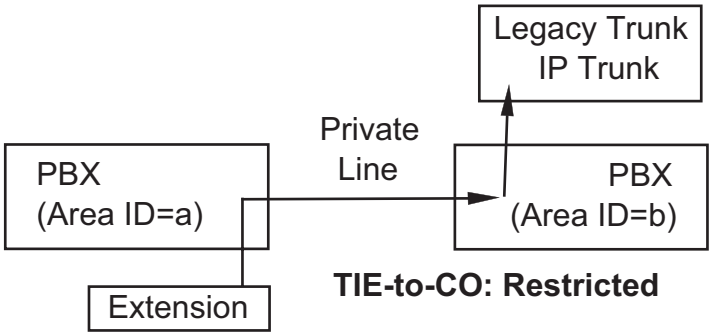

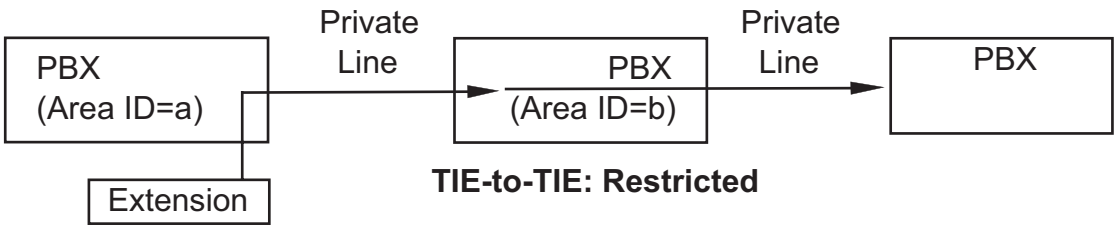

3. "CO to TIE" calls.

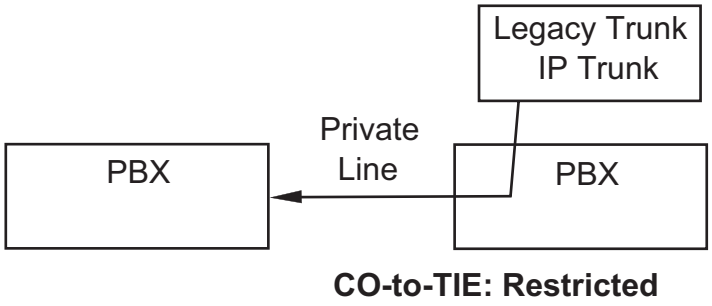

4. Conference calls that include legacy trunks and IP trunks.

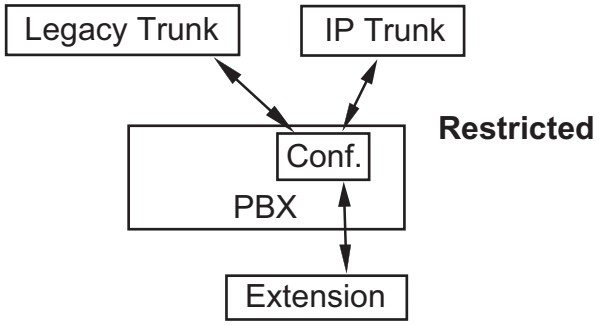

You can check the programming status and call restriction status of Logical Partitioning in 7.3.5 Utility—Log—Call Control Log.

Note

When local partitioning is applied, if there are QSIG connections between KX-NS300s, the connected KX-NS300s are considered to be the same area and restrictions for private lines are removed. Connections from outside lines of other devices to private lines are restricted under all circumstances. QSIG connections using PRI adaptors are also restricted.

Value Range

Disable, Enable

PC Programming Manual References

7.3.5 Utility—Log—Call Control Log
9.2 PBX Configuration—[1-1] Configuration—Slot—System Property—Main—◆ Area ID for logical partition

Option 3

◆ Confirmation Tone—Tone 1 : Called by Voice

Enables the PBX to send Confirmation Tone 1. Confirmation Tone 1 is heard from a PT when it receives a call in voice-calling mode.

Value Range

Disable, Enable

Feature Guide References

2.18.1 Doorphone Call
2.25.2 Confirmation Tone

◆ Confirmation Tone—Tone 2 : Paged / Automatic Answer

Enables the PBX to send Confirmation Tone 2. Confirmation Tone 2 is heard from a PT when it receives a call in Hands-free Answerback mode, or paging.

Value Range

Disable, Enable

Feature Guide References

2.4.4 Hands-free Answerback
2.17.1 Paging
2.25.2 Confirmation Tone

◆ Confirmation Tone—Tone 3-1 : Start Talking after Making Call / Call from DOORPHONE

Enables the PBX to send Confirmation Tone 3-1. Confirmation Tone 3-1 is heard from an extension when, for example, it pages another extension, or from a doorphone when the doorphone button is pressed.

Value Range

Disable, Enable

Feature Guide References

2.25.2 Confirmation Tone

◆ Confirmation Tone—Tone 3-2 : Start Talking after Answering Call

Enables the PBX to send Confirmation Tone 3-2. Confirmation Tone 3-2 is heard from an extension when answering a call by, for example, the Call Pickup feature.

Value Range

Disable, Enable

Feature Guide References

2.25.2 Confirmation Tone

◆ Confirmation Tone—Tone 4-1 : Start Conference

Enables the PBX to send Confirmation Tone 4-1. Confirmation Tone 4-1 is heard from an extension when a new party joins a conference call.

Value Range

Disable, Enable

Feature Guide References

2.14.2 Conference
2.25.2 Confirmation Tone

◆ Confirmation Tone—Tone 4-2 : Finish Conference

Enables the PBX to send Confirmation Tone 4-2. Confirmation Tone 4-2 is heard from an extension when a party leaves a conference call.

Value Range

Disable, Enable

Feature Guide References

2.14.2 Conference
2.25.2 Confirmation Tone

◆ Confirmation Tone—Tone 5 : Hold

Enables the PBX to send Confirmation Tone 5. Confirmation Tone 5 is heard from an extension when it holds a call.

Value Range

Disable, Enable

Feature Guide References

2.25.2 Confirmation Tone

◆ Dial Tone—Distinctive Dial Tone

Enables the PBX to send dial tones at different frequencies depending on the setting of the extension.

Value Range

Disable, Enable

Feature Guide References

2.25.1 Dial Tone

◆ Dial Tone—Dial Tone for Extension

Selects the dial tone the PBX sends to extensions to inform about the features activated on them.

Value Range

Type A, Type B

Feature Guide References

2.25.1 Dial Tone

◆ Dial Tone—Dial Tone for ARS

Selects the dial tone the PBX (instead of the network) sends to the caller when a call is made using the ARS feature, or ISDN En Bloc dialling.

Value Range

Type A, Type B

PC Programming Manual References

9.26 PBX Configuration—[1-1] Configuration—Slot—Port Property - PRI Port
16.1 PBX Configuration—[8-1] ARS—System Setting

Feature Guide References

2.8.1 Automatic Route Selection (ARS)
2.25.1 Dial Tone

◆ Echo Cancel—Conference

Enables the use of echo cancelling for conference calls.

Value Range

Disable, Enable

Feature Guide References

2.14.2 Conference

◆ Echo Cancel—CO-to-CO

Enables the use of echo cancelling for trunk-to-trunk calls.

Value Range

Disable, Enable

◆ Echo Cancel—Extension to Analogue Line

Enables the use of echo cancelling for extension-to-analogue trunk calls.

Value Range

Disable, Enable

◆ Echo Cancel—Extension to Digital Line

Enables the use of echo cancelling for extension-to-ISDN line calls.
If set to "Enable", echo cancelling is used for extension-to-ISDN line calls.
If set to "Disable", echo cancelling is not used for extension-to-ISDN line calls.

Value Range

Disable, Enable

Option 4

◆ DSS Key—DSS key mode for Incoming Call

Enables the use of a DSS button to pick up an incoming call to another extension or an ICD group.

Value Range

On or Flash, Off

Feature Guide References

2.4.3 Call Pickup
2.21.3 LED Indication

◆ DSS Key—Call Pick-up by DSS key for Direct Incoming Call

Specifies whether a DSS button will light up or flash when a call rings at the specified extension. To enable this setting, ◆ **DSS Key—DSS key mode for Incoming Call** on this screen must be set to "ON or Flash".

Value Range

Disable: The DSS button will light up when a call arrives, but pressing it will not pick up the call.
Enable: The DSS button will flash when a call arrives, and pressing it will pick up the call.

Feature Guide References

2.4.3 Call Pickup

◆ DSS Key—Call Pick-up by DSS key for ICD Group Call

Specifies whether a DSS button will light up or flash when a call rings at the specified incoming call distribution group.
To enable this setting, ◆ **DSS Key—DSS key mode for Incoming Call** on this screen must be set to "ON or Flash".

Value Range

Disable: The DSS button will light up when a call arrives, but pressing it will not pick up the call.
Enable: The DSS button will flash when a call arrives, and pressing it will pick up the call.

Feature Guide References

2.4.3 Call Pickup

◆ DSS Key—Automatic Transfer for Extension Call

Specifies whether pressing a DSS or SDN button during an extension-to-extension call disconnects the current call or places the call on consultation hold.

Value Range

Disable: The PBX disconnects the current call, and calls the extension assigned to the DSS or SDN button.
Enable: The PBX places the current call on consultation hold.

Feature Guide References

2.12.1 Call Transfer

◆ DSS Key—Caller Information Display before Call Pick-up

Specifies whether incoming caller information is displayed after pressing the DSS button when a call is ringing at the designated extension, instead of answering the call.

Value Range

Enable: Pressing the DSS button displays the caller's information.
Disable: Pressing the DSS button answers the call.

Feature Guide References

2.4.3 Call Pickup

◆ Private Network—Public Call through Private Network—Minimum Public Caller ID Digits

Specifies the minimum length of Caller ID required for a call from a private network to be considered as a call from a public network.

Value Range

0–15

Feature Guide References

2.19.1 Caller ID

◆ Private Network—TIE Call by Extension Numbering

Enables extensions at two PBXs connected in a network to have the same leading number. For example, extension 101 is registered at PBX 1, and extension 102 is registered at PBX 2. Only the Extension Number Method is supported.
If disabled, different leading numbers need to be assigned for extensions at each PBX.

Value Range

Disable, Enable

PC Programming Manual References

17.1 PBX Configuration—[9-1] Private Network—TIE Table—◆ Leading Number

Feature Guide References

4.2.1 TIE Line Service

◆ Send CLIP of CO Caller—when call is transferred to CO (CLIP of Held Party)

Enables the transfer of related CLIP information when a party on hold is transferred. When set to "Enable", the transfer destination will receive the original caller's CLIP information, not the information of the extension that performed the transfer.

Value Range

Disable, Enable

Feature Guide References

4.1.2.2 Calling/Connected Line Identification Presentation (CLIP/COLP)

◆ Send CLIP of CO Caller—when call is forwarded to CO

Selects whether the CLIP number of the calling party or the CLIP number of the forwarding extension or virtual PS is sent to the forwarding destination to identify the origin of a trunk call.

Value Range

Disable: The CLIP number assigned to the forwarding extension or virtual PS is sent.
Enable: The CLIP number of the calling party is sent.

Feature Guide References

2.2.2.3 Outside Destinations in Incoming Call Distribution Group
4.1.2.2 Calling/Connected Line Identification Presentation (CLIP/COLP)
4.2.6 Network ICD Group

◆ Send CLIP of Extension Caller—when call is forwarded to CO

Selects whether the CLIP number of the calling extension or the CLIP number of the forwarding extension or virtual PS is sent to the forwarding destination to identify the origin of a call.

Value Range

Disable: The CLIP number assigned to the forwarding extension or virtual PS is sent.
Enable: The CLIP number of the calling extension is sent.

Feature Guide References

2.2.2.3 Outside Destinations in Incoming Call Distribution Group
4.1.2.2 Calling/Connected Line Identification Presentation (CLIP/COLP)
4.2.6 Network ICD Group

◆ System Wireless—Out of Range Registration

Selects whether the PBX can set the status of a PS to Out of Range if no signal is received from the PS for a preset length of time. This feature must be enabled to allow PS roaming.

Value Range

Disable, Enable

PC Programming Manual References

10.3 PBX Configuration—[2-3] System—Timers & Counters—◆ System Wireless—PS Out of Range Timer (s)

◆ System Wireless—SDN Delayed Ringing with LCD

Selects whether call information (such as Caller ID) is shown on the display of a PDN extension PS (i.e., a PS with one or more PDN buttons) when a call is received while delayed ringing is set.

Value Range

Disable, Enable

PC Programming Manual References

12.2.3 PBX Configuration—[4-2-3] Extension—Portable Station—Flexible Button—◆ Parameter Selection (for SDN)

Feature Guide References

2.9.1 Primary Directory Number (PDN)/Secondary Directory Number (SDN) Extension

◆ Transfer—Automatic Answer for Transferred Call

Enables transferred calls (including direct extension calls) to be automatically answered, when using the Hands-free Answerback feature.

Value Range

Disable, Enable

Feature Guide References

2.4.4 Hands-free Answerback

Option 5

◆ SLT—SLT Hold Mode

Selects how to hold a line and transfer a call with an SLT. For details of each mode, see "2.13.1 Call Hold" in the Feature Guide.

Value Range

Mode 1, Mode 2, Mode 3, Mode 4

Feature Guide References

2.13.1 Call Hold

◆ SLT—Message Waiting Lamp Pattern

Specifies the Message Waiting Lamp light pattern of SLTs.

Value Range

1–12

Feature Guide References

2.20.1 Message Waiting

◆ Whisper OHCA—for SLT

Enables the use of Whisper OHCA to SLTs and IP-PTs

Value Range

Disable, Enable

Feature Guide References

2.10.4.4 Whisper OHCA

◆ Call Waiting—Automatic Call Waiting for Extension Call

Selects whether Busy Station Signalling (BSS) is automatically performed when an extension user calls a busy extension.

Value Range

Disable, Enable

Feature Guide References

2.1.3.3 Call Waiting

◆ Busy Out—Busy Out for Analogue CO

Enables the PBX to automatically set a trunk to Busy Out status when a loop current is not detected, preventing that trunk from being used.

Value Range

Disable, Enable

Feature Guide References

2.5.4.6 Trunk Busy Out

◆ ISDN Voice Path Connection—Connect when "Alert" is sent from ISDN

Enables the voice path of an ISDN line to connect even when an "Alert" signal is received from the telephone company.

Value Range

Disable, Enable

◆ PT Feature Access—No. 1–8

Specifies the System Feature Access Menu (1–8) shown on the display of an extension.

Value Range

None, Call Back Cancel, Call Pickup Direct, Call Pickup Group, DOORPHONE Call, Door Open, Relay On, External BGM, Paging

◆ ISDN Option—Fwd from ISDN to ISDN

Specifies whether alert messages are sent to the ISDN network. This setting should be enabled for networks that disconnect a call if an alert message is not received.

Value Range

Mode1: Disable
Mode2: Enable

◆ ISDN Option—Calling Party Name Sending Format

Specifies the sending format of the calling party name when making a call to the ISDN network.

Value Range

Display, Facility

Option 6 (CTI)

◆ Built-in Communication Assistant—System status retry interval timer

Specifies the length of time until the alive check is retried when no response is received, for First Party Call Control CTI such as Communication Assistant (CA).

Value Range

0–60 s

Feature Guide References

2.26.1 Computer Telephony Integration (CTI)

◆ Built-in Communication Assistant—System status retry counter

Specifies the number of times that the alive check is repeated for First Party Call Control CTI such as Communication Assistant (CA). When the alive check has been attempted the programmed number times without success, the PBX assumes that the logical connection with the CTI application software has been lost.

Value Range

0–10

Feature Guide References

2.26.1 Computer Telephony Integration (CTI)

◆ 3rd Party CTI—System status retry interval timer

Specifies the length of time until the alive check is retried when no response is received, for Third Party Call Control CTI.

Value Range

0–60 s

Feature Guide References

2.26.1 Computer Telephony Integration (CTI)

◆ 3rd Party CTI—System status retry counter

Specifies the number of times that the alive check is repeated for Third Party Call Control CTI. When the alive check has been attempted the programmed number of times without success, the PBX assumes that the logical connection with the CTI application software has been lost.

Value Range

0–10

Feature Guide References

2.26.1 Computer Telephony Integration (CTI)

◆ 3rd Party CTI—CDR retry interval timer

Specifies the length of time until the alive check of CDR is retried when no response is received, for Third Party Call Control CTI.

Value Range

0–60 s

Feature Guide References

2.26.1 Computer Telephony Integration (CTI)

◆ 3rd Party CTI—CDR retry counter

Specifies the number of times that the alive check of CDR is repeated for Third Party Call Control CTI. When the alive check has been attempted the programmed number times, the association is released automatically.

Value Range

0–10

Feature Guide References

2.26.1 Computer Telephony Integration (CTI)

◆ CTI Make Call—SLT Ring

Specifies whether to ring an SLT when a call is made from CTI, instead of the SLT.

Value Range

Enable, Disable

◆ CTI Hold—Forced Idle when Hold by PDN/SDN Key

Selects whether to force an extension to become idle while having a call held on a PDN/SDN button.

Value Range

Enable, Disable

Feature Guide References

2.9.1 Primary Directory Number (PDN)/Secondary Directory Number (SDN) Extension

Option 7

◆ Incoming Call Log—Busy/Intercept (when Called Party is Busy)

Specifies whether the following types of calls are recorded in the incoming call log of the original destination.

- Calls received when the extension is busy.
- Calls rerouted via the Intercept Routing—Busy feature.

If this setting is enabled, calls are recorded as "Not Answered".

Value Range

Enable (Not Answered), Disable

Feature Guide References

2.19.2 Incoming Call Log

◆ Incoming Call Log—Fwd All/Fwd Busy

Specifies whether the following types of calls are recorded in the incoming call log of the original destination.

- Calls rerouted via the FWD—All Calls feature.
- Calls rerouted via the FWD—Busy feature.

If this setting is enabled, calls are recorded as "Not Answered".

Value Range

Enable (Not Answered), Disable

Feature Guide References

2.19.2 Incoming Call Log

◆ Incoming Call Log—Call Pickup

Specifies how calls answered using the Call Pickup feature are recorded in the incoming call log of the original destination.

Value Range

Answered, Not Answered

Feature Guide References

2.19.2 Incoming Call Log

◆ Incoming Call Log—Extension / TIE Call

Specifies whether extension/TIE calls are recorded in the answering extension's incoming call log.

Value Range

Enable, Disable

Feature Guide References

2.19.2 Incoming Call Log

◆ Outgoing Call Log—Extension Call

Specifies whether extension/TIE calls are recorded in the calling extension's outgoing call log.

Value Range

Enable, Disable

Feature Guide References

2.6.3 Last Number Redial

Option 8

◆ P2P Group—Priority Voice 1/Priority Voice 2/Priority Voice 3

Specifies the order of priority of the codecs to use for P2P groups.

Value Range

Priority Voice 1: G.729, G.711, G.722
Priority Voice 2/Priority Voice 3: G.729, G.711, G.722, None

Feature Guide References

5.2.3 Peer-to-Peer (P2P) Connection

◆ P2P Group—Video Conference

Specifies the availability of video conferencing for capable extensions within P2P groups.

Value Range

Disable, Enable

Feature Guide References

5.2.3 Peer-to-Peer (P2P) Connection

◆ Extension - Trunk P2P—IP Extension - SIP Trunk P2P

Specifies whether P2P connections are enabled between SIP trunks and IP extensions.

Value Range

Disable, Enable

Feature Guide References

5.2.3 Peer-to-Peer (P2P) Connection

◆ Conference Group—Maximum Number of Speakers During a Conference Group Call

Specifies the maximum number of participants that can speak during a Conference Group Call.

Value Range

8 Party, 32 Party

Feature Guide References

2.14.1 Conference Features—SUMMARY
2.14.2 Conference

Option 9

◆ Extension / Mailbox Setting—Mailbox Number Synchronization with Extension Number

Enables the synchronisation of **Mailbox Number** and **Extension Number** settings.

Value Range

Enable, Disable

PC Programming Manual References

12.1.1 PBX Configuration—[4-1-1] Extension—Wired Extension—Extension Settings—Main—◆ Extension Number
12.2.1 PBX Configuration—[4-2-1] Extension—Portable Station—Extension Settings—Main—◆ Extension Number
20.1.2 UM Configuration—[1-2] Mailbox Settings—Full Setting—Mailbox Parameters—◆ Mailbox Number

Feature Guide References

3.1.1 Unified Messaging System Overview

◆ Extension / Mailbox Setting—Mailbox COS Synchronization with Extension COS

Enables the synchronisation of a user's **Ext. COS** setting and **Mailbox COS** setting.

Value Range

Enable, Disable

PC Programming Manual References

8.1 Users—User Profiles
12.1.1 PBX Configuration—[4-1-1] Extension—Wired Extension—Extension Settings—Main—◆ COS
12.2.1 PBX Configuration—[4-2-1] Extension—Portable Station—Extension Settings—Main—◆ COS
20.1.2 UM Configuration—[1-2] Mailbox Settings—Full Setting—Mailbox Parameters—◆ Class of Service (Mailbox)

Feature Guide References

3.1.1 Unified Messaging System Overview

10.10 PBX Configuration—[2-10] System—Extension CID Settings

Various settings for extension Caller ID can be programmed.

◆ Extension Caller ID Modulation Type

Specifies the modulation frequency to be used when sending Caller ID information to an SLT.

Value Range

V.23(ETSI), Bell202(Bellcore)

Feature Guide References

2.19.1 Caller ID

◆ Channel Seizure Signal Bits

Specifies the number of seizure bits to send when sending Caller ID information to an SLT.

Value Range

10 × n (n=3–40) bits

Feature Guide References

2.19.1 Caller ID

◆ Mark Signal Bits

Specifies the number of mark bits to send when sending Caller ID information to an SLT.

Value Range

10 × n (n=3–40) bits

Feature Guide References

2.19.1 Caller ID

◆ Channel Seizure Wait Time

Specifies the length of time that the PBX waits before starting to send the seizure signal following the first ring when sending Caller ID information to an SLT.

Value Range

64 × n (n=5–35) ms

Feature Guide References

2.19.1 Caller ID

◆ Caller ID Signal Type

Specifies the type of signal modulation to be used when sending Caller ID information to an SLT (reference only).

Value Range

FSK

Feature Guide References

2.19.1 Caller ID

◆ Additional Local Trunk Access Code to Extension Caller ID

Enables the PBX to automatically add a Trunk Access number to the received telephone number when sending the Caller ID number of an incoming trunk call to an SLT.

Value Range

Disable, Enable

Feature Guide References

2.19.1 Caller ID

◆ Send Caller ID Date & Time to Extension

Enables the PBX to send the date and time of an incoming call when sending Caller ID information to an SLT.

Value Range

Disable, Enable

Feature Guide References

2.19.1 Caller ID

◆ Send Caller ID Name to Extension

Enables the PBX to send the caller's name when sending Caller ID information to an SLT.

Value Range

Disable, Enable

Feature Guide References

2.19.1 Caller ID

◆ Send Caller ID Long Distance to Extension

Enables the PBX to send a call qualifier (Long Distance) (if received from the trunk) when sending Caller ID information to an SLT.

Value Range

Disable, Enable

Feature Guide References

2.19.1 Caller ID

◆ FSK Transmission Level (for MCSLC Card)

Specifies the transmission level for FSK signal modulation for MCSLC cards.

Value Range

-14 dB, -12 dB, -10 dB, -8 dB, -6 dB, -4 dB, -2 dB, 0 dB

Feature Guide References

2.19.1 Caller ID

10.11 PBX Configuration—[2-11] System—Audio Gain

10.11.1 PBX Configuration—[2-11-1] System—Audio Gain—Paging/MOH

Gain levels for the External Pager/External BGM ports can be programmed.

◆ Paging—EPG 1-6 (External Pager 1-6)

Specifies the paging volume for External Pager port 1.

Value Range

-15.5–15.5 dB

PC Programming Manual References

11.4 PBX Configuration—[3-4] Group—Paging Group

Feature Guide References

2.17.1 Paging

◆ Paging—Paging Level from PT Speaker

Specifies the volume when paging is broadcast through the speaker of a PT.

Value Range

-15 dB, -12 dB, -9 dB, -6 dB, -3 dB, 0 dB, 3 dB, 6 dB

PC Programming Manual References

11.4 PBX Configuration—[3-4] Group—Paging Group

Feature Guide References

2.17.1 Paging

◆ Internal MOH—MOH1-2 (Music On Hold 1-2)

Specifies the music volume for each internal BGM (MOH1-2).

Value Range

-31.5–31.5 dB

PC Programming Manual References

10.2 PBX Configuration—[2-2] System—Operator & BGM

Feature Guide References

2.13.4 Music on Hold
2.30.1 Background Music (BGM)

◆ External MOH—MOH 3–8 (Music on Hold 3–8)

Specifies the music volume for External BGM port 1-6 (MOH 3-8).

Value Range

-31.5–31.5 dB

PC Programming Manual References

10.2 PBX Configuration—[2-2] System—Operator & BGM

Feature Guide References

2.13.4 Music on Hold
2.30.1 Background Music (BGM)

10.11.2 PBX Configuration—[2-11-2] System—Audio Gain—Card

Gain levels can be programmed for each type of card.

◆ Up Gain (To PBX)

Specifies the volume for audio signals from the selected type of card to the PBX.

Value Range

-31.5–31.5 dB

◆ Down Gain (From PBX)

Specifies the volume for audio signals from the PBX to the selected type of card.

Value Range

-15.5–15.5 dB

Section 11

PBX Configuration—[3] Group

This section serves as reference operating instructions for the Group menu of the PBX Configuration Menu of the Setup screen of Web Maintenance Console.

11.1 PBX Configuration—[3-1] Group—Trunk Group

11.1.1 PBX Configuration—[3-1-1] Group—Trunk Group—TRG Settings

Trunks can be organised into trunk groups. The settings of a trunk group are applied to all trunks in the group. A maximum of 64 trunk groups can be programmed.
For more information on trunk groups, see "5.1.2 Group" in the Feature Guide.

Main

◆ Group Name

Specifies the name of the trunk group for programming reference.

Value Range

Max. 20 characters

PC Programming Manual References

18.1 PBX Configuration—[10-1] CO & Incoming Call—CO Line Settings

◆ COS

Specifies the COS of the trunk group, applied when making a call from a trunk to another trunk with TIE Line Service.
If you wish to prevent such calls from being made, ensure that the COS specified here has a TRS level of "7" assigned for all relevant time modes in **10.7.1 PBX Configuration—[2-7-1] System—Class of Service—COS Settings**.

Value Range

1–64

PC Programming Manual References

10.7.1 PBX Configuration—[2-7-1] System—Class of Service—COS Settings
18.1 PBX Configuration—[10-1] CO & Incoming Call—CO Line Settings

Feature Guide References

4.2.1 TIE Line Service

◆ Line Hunting Order

Specifies the trunk hunting sequence for the trunk group. The hunting sequence can be programmed to start from the lowest or highest numbered trunks, or to rotate uniformly among all trunks.

Value Range

High -> Low, Low -> High, Rotation

PC Programming Manual References

18.1 PBX Configuration—[10-1] CO & Incoming Call—CO Line Settings

Feature Guide References

2.5.5.3 Trunk Access

◆ CO-CO Duration Time (*60s)

Specifies the length of time that a trunk-to-trunk call can be maintained before being disconnected.

Value Range

None, 1–60 (× 60 s)

PC Programming Manual References

18.1 PBX Configuration—[10-1] CO & Incoming Call—CO Line Settings

Feature Guide References

2.11.8 Trunk Call Limitation

◆ Extension-CO Duration Time (*60s)

Specifies the length of time that an extension-to-trunk call can be maintained before being disconnected.

Value Range

None, 1–60 (× 60 s)

PC Programming Manual References

10.7.1 PBX Configuration—[2-7-1] System—Class of Service—COS Settings
10.9 PBX Configuration—[2-9] System—System Options
18.1 PBX Configuration—[10-1] CO & Incoming Call—CO Line Settings

Feature Guide References

2.11.8 Trunk Call Limitation

◆ Caller ID Modification Table

Specifies the table to be used for modifying caller information (telephone number).

Value Range

1–4

PC Programming Manual References

11.1.3 PBX Configuration—[3-1-3] Group—Trunk Group—Caller ID Modification
18.1 PBX Configuration—[10-1] CO & Incoming Call—CO Line Settings

Feature Guide References

2.19.1 Caller ID

◆ Dialling Plan Table

Specifies the table to be used for en-bloc dialling.

Value Range

1–4

PC Programming Manual References

11.1.4 PBX Configuration—[3-1-4] Group—Trunk Group—Dialling Plan

Tone Detection

◆ Group Name

Specifies the name of the trunk group for programming reference.

Value Range

Max. 20 characters

PC Programming Manual References

18.1 PBX Configuration—[10-1] CO & Incoming Call—CO Line Settings

◆ DISA Tone Detection—Silence

Enables the disconnection of a DISA-originated trunk-to-trunk call by silence detection.

Value Range

Disable, Enable

PC Programming Manual References

13.3.1 PBX Configuration—[5-3-1] Optional Device—Voice Message—DISA System
18.1 PBX Configuration—[10-1] CO & Incoming Call—CO Line Settings

Feature Guide References

2.16.1 Direct Inward System Access (DISA)

◆ DISA Tone Detection—Continuous

Enables the disconnection of a DISA-originated trunk-to-trunk call by continuous signal detection.

Value Range

Disable, Enable

PC Programming Manual References

13.3.1 PBX Configuration—[5-3-1] Optional Device—Voice Message—DISA System
18.1 PBX Configuration—[10-1] CO & Incoming Call—CO Line Settings

Feature Guide References

2.16.1 Direct Inward System Access (DISA)

◆ DISA Tone Detection—Cyclic

Enables the disconnection of a DISA-originated trunk-to-trunk call by cyclic signal detection.

Value Range

Disable, Enable

PC Programming Manual References

13.3.1 PBX Configuration—[5-3-1] Optional Device—Voice Message—DISA System
18.1 PBX Configuration—[10-1] CO & Incoming Call—CO Line Settings

Feature Guide References

2.16.1 Direct Inward System Access (DISA)

◆ Simplified Voice Message Tone Detection—Silence

Enables the disconnection of an SVM-originated trunk-to-trunk call by silence detection.

Value Range

Disable, Enable

PC Programming Manual References

None

Feature Guide References

2.16.3 Built-in Simplified Voice Message (SVM)

◆ Simplified Voice Message Tone Detection—Continuous

Enables the disconnection of an SVM-originated trunk-to-trunk call by continuous signal detection.

Value Range

Disable, Enable

PC Programming Manual References

None

Feature Guide References

2.16.3 Built-in Simplified Voice Message (SVM)

◆ Simplified Voice Message Tone Detection—Cyclic

Enables the disconnection of an SVM-originated trunk-to-trunk call by cyclic signal detection.

Value Range

Disable, Enable

PC Programming Manual References

None

Feature Guide References

2.16.3 Built-in Simplified Voice Message (SVM)

Host PBX Access Code

◆ Group Name

Specifies the name of the trunk group for programming reference.

Value Range

Max. 20 characters

PC Programming Manual References

18.1 PBX Configuration—[10-1] CO & Incoming Call—CO Line Settings

◆ Host PBX Access Code 1–10

Specifies the feature number used to access a trunk from the host PBX.

Value Range

Max. 10 digits (consisting of 0–9, *, and #)

PC Programming Manual References

18.1 PBX Configuration—[10-1] CO & Incoming Call—CO Line Settings

Feature Guide References

2.5.4.8 Host PBX Access Code (Access Code to the Telephone Company from a Host PBX)

Collect Call Reject (for Brazil)

◆ Group Name

Specifies the name of the trunk group for programming reference.

Value Range

Max. 20 characters

PC Programming Manual References

18.1 PBX Configuration—[10-1] CO & Incoming Call—CO Line Settings

◆ Collect Call Reject (for Brazil)—Mode

Enables the PBX to automatically reject collect calls. This setting is only for users in Brazil.

Value Range

Disable, Enable

◆ Collect Call Reject (for Brazil)—Wait Time

Selects the length of time that the PBX waits before sending a flash signal to reject a collect call. This setting is only for users in Brazil.

Value Range

500 ms, 1000 ms, 1500 ms, 2000 ms

◆ Collect Call Reject (for Brazil)—Flashing Time

Selects the length of the flash signal that the PBX sends to reject a collect call. This setting is only for users in Brazil.

Value Range

1000 ms, 1500 ms, 2000 ms, 2500 ms

11.1.2 PBX Configuration—[3-1-2] Group—Trunk Group—Local Access Priority

Trunk groups can be assigned a priority for Idle Line Access. When making a trunk call by Idle Line Access, the PBX will search trunk groups for an idle trunk according to the priority assigned here.

◆ Trunk Group No. & Name

Specifies the trunk group assigned to the corresponding priority level.
Select the blank option to not assign a trunk group to the priority.

Value Range

Trunk Group No. 1–64

PC Programming Manual References

18.1 PBX Configuration—[10-1] CO & Incoming Call—CO Line Settings

Feature Guide References

2.5.5.3 Trunk Access

11.1.3 PBX Configuration—[3-1-3] Group—Trunk Group—Caller ID Modification

The telephone numbers of incoming callers can be modified automatically according to pre-programmed modification tables, and then recorded for calling back.

Leading Digits

After the caller's number is modified by the Length of Digits Modification Tables or CLIP Modification Tables, the PBX checks the leading digits of the modified number for an area code programmed in the Caller ID Modification Table assigned to that trunk group. If it finds such a code, it removes digits and adds a number to the modified number. If this number is stored as a System Speed Dialling number, the caller's name can be shown on a PT display and the call can be routed to a certain extension (CLI destination). A maximum of 4 Caller ID Modification Tables, each containing 10 local/international call data and 1 long distance code, can be programmed. Each trunk group can select a table for use. Select the desired table from the **Modification Table** list.
If the modified number does not contain an area code programmed here, the PBX applies the Long Distance Code settings to the modified number.

◆ Area Code (for Local / International Call Data 1–10)

Specifies the leading number (area code) to look for in the incoming caller's number.

Value Range

Max. 6 digits (consisting of 0–9, *, and #)

Feature Guide References

2.19.1 Caller ID

◆ Removed Number of Digits

Specifies the number of digits to be removed from the beginning of the incoming caller's number.

Value Range

0–9

PC Programming Manual References

11.1.1 PBX Configuration—[3-1-1] Group—Trunk Group—TRG Settings—◆ Caller ID Modification Table
14.1 PBX Configuration—[6-1] Feature—System Speed Dial

Feature Guide References

2.19.1 Caller ID

◆ Added Number

Specifies the number to be added to the incoming caller's number in the place of the removed digits.

Value Range

Max. 4 digits (consisting of 0–9, *, and #)

PC Programming Manual References

11.1.1 PBX Configuration—[3-1-1] Group—Trunk Group—TRG Settings—◆ Caller ID Modification Table
14.1 PBX Configuration—[6-1] Feature—System Speed Dial

Feature Guide References

2.19.1 Caller ID

Length of Digits

The PBX adds a certain number of digits to the caller's number depending on the length of digits, as programmed in the Length of Digits Modification Tables assigned to the trunk group. This modification is applied to incoming trunk calls routed through public networks when the type of network numbering plan is Unknown or not specified.
A maximum of 4 Length of Digits Modification Tables can be programmed. Select the desired table from the **Modification Table** list.
If the length of digits of an incoming trunk call is less than the ◆ **Minimum Caller ID Digits (for National)**, the caller's number is not modified.

◆ Minimum Caller ID Digits (for International)

Specifies the minimum number of digits required in the caller's number for it to be recognised as an international call. The value specified here must be larger than ◆ **Minimum Caller ID Digits (for National)**.

Value Range

1–31

Feature Guide References

2.19.1 Caller ID

◆ Minimum Caller ID Digits (for National)

Specifies the minimum number of digits required in the caller's number for it to be recognised as a national call. The value specified here must be smaller than ◆ **Minimum Caller ID Digits (for International)**.

Value Range

0–30

Feature Guide References

2.19.1 Caller ID

◆ Added Number (for International)

Specifies the number to be added to the incoming telephone number when the total number of digits exceeds ◆ **Minimum Caller ID Digits (for International)**.

Value Range

Max. 8 digits (0–9, *, and #)

Feature Guide References

2.19.1 Caller ID

◆ Added Number (for National)

Specifies the number to be added to the incoming telephone number when the total number of digits exceeds ◆ **Minimum Caller ID Digits (for National)** but does not exceed ◆ **Minimum Caller ID Digits (for International)**.

Value Range

Max. 8 digits (0–9, *, and #)

Feature Guide References

2.19.1 Caller ID

CLIP

When incoming caller information is sent through an ISDN line and the type of the network numbering plan is International, National, or Subscriber, the caller's number can be modified as programmed in the Modification Tables assigned to the trunk group. The modified number will then be recorded, and it is used for sending to the network as a CLIP number.
A maximum of 4 CLIP Modification Tables can be programmed. Select the desired table from the **Modification Table** list.

◆ Removed Number of Digits

Specifies the number of leading digits to be removed from the incoming caller's number for each type of network numbering plan.

Value Range

0–9

PC Programming Manual References

9.26 PBX Configuration—[1-1] Configuration—Slot—Port Property - PRI Port—◆ Calling Party Number—Type of Number—Public, Private
9.26 PBX Configuration—[1-1] Configuration—Slot—Port Property - PRI Port—◆ Called Party Number—Type of Number—Public, Private

Feature Guide References

2.19.1 Caller ID

◆ Added Number

Specifies the number to be added to the incoming caller's number in the place of the removed digits for each type of network numbering plan.

Value Range

Max. 4 digits (consisting of 0–9, *, and #)

PC Programming Manual References

9.26 PBX Configuration—[1-1] Configuration—Slot—Port Property - PRI Port—◆ Calling Party Number—Type of Number—Public, Private
9.26 PBX Configuration—[1-1] Configuration—Slot—Port Property - PRI Port—◆ Called Party Number—Type of Number—Public, Private

Feature Guide References

2.19.1 Caller ID

11.1.4 PBX Configuration—[3-1-4] Group—Trunk Group—Dialling Plan

The PBX sends all of the dialled digits at once after an extension user completes dialling. The PBX can recognise the end of dialling when the dialled telephone number starts with the programmed leading number and contains the programmed total number of digits.
When the PBX recognises the end of dialling to an analogue trunk, the PBX cancels the muting of the caller's voice sent to the analogue trunk immediately. If the PBX cannot recognise the end of dialling, the PBX mutes the caller's voice sent to an analogue trunk from the time at which the last digit is dialled until the analogue trunk inter-digit timer expires.
4 tables can be programmed, each with a maximum of 50 leading numbers. Select the table to programme from the **Dialling Plan Table** list.
To assign a set of leading numbers automatically, click **Auto Assign**.

◆ Leading Number

Specifies the leading number to be regarded as the beginning of dialling.

Value Range

Max. 32 digits (consisting of 0–9, *, #, N [2,3,4,5,6,7,8,9], P [0, 1], and X [0–9, *, and #])

PC Programming Manual References

10.3 PBX Configuration—[2-3] System—Timers & Counters—Dial / IRNA / Recall / Tone—◆ Dial—Analogue CO First Digit (s)
10.3 PBX Configuration—[2-3] System—Timers & Counters—Dial / IRNA / Recall / Tone—◆ Dial—Analogue CO Inter-digit (s)
11.1.1 PBX Configuration—[3-1-1] Group—Trunk Group—TRG Settings—Main—◆ Dialling Plan Table

Feature Guide References

4.1.2.1 Integrated Services Digital Network (ISDN)—SUMMARY

◆ Removed Number of Digits

Specifies the number of leading digits to be removed from the number dialled by en-bloc dialling.

Value Range

0–15

Feature Guide References

4.1.2.1 Integrated Services Digital Network (ISDN)—SUMMARY

◆ Added Number

Specifies the number to be added to the number dialled by en-bloc dialling in the place of the removed digits.

Value Range

Max. 32 digits (consisting of 0–9, *, and #)

Feature Guide References

4.1.2.1 Integrated Services Digital Network (ISDN)—SUMMARY

11.1.4.1 PBX Configuration—[3-1-4] Group—Trunk Group—Dialling Plan—Auto Assign

It is possible to assign a set of leading numbers automatically.

◆ Select Auto Assigning Table

Selects the set of preset leading number values to assign to the active dialling plan table. When Type D is selected, you will be prompted to enter a 3-digit area code, and 7 "X"s, in cells 1 through 47 of the dialling plan table.

Value Range

Type A:
- 1: N11
- 2: NXX XXXX
- 3: 1NXX NXX XXXX
- 4–50: Not stored

Type B:
- 1: N11
- 2: NNX XXXX
- 3: 1NPX NXX XXXX
- 4–50: Not stored

Type C:
- 1: N11
- 2: NXX XXXX
- 3: 1NNX XXXX
- 4: 1NPX NXX XXXX
- 5–50: Not stored

Type D:
- 1–47: Not stored
- 48: N11
- 49: NXX XXXX
- 50: 1NXX NXX XXXX

Type E:
- 1: N11
- 2: NXX NXX XXXX
- 3: 1NXX NXX XXXX
- 4–50: Not stored

PC Programming Manual References

11.1.4 PBX Configuration—[3-1-4] Group—Trunk Group—Dialling Plan

11.1.5 PBX Configuration—[3-1-5] Group—Trunk Group—Charge Rate

The rate charged per pay tone signal (sent from the telephone company) can be assigned for each trunk group.

◆ Trunk Group Name

Indicates the name of the trunk group (reference only).

Value Range

Max. 20 characters

◆ Rate

Specifies the call charge rate.
The number of decimal places that can be specified here depends on the value set in ◆ **Charge Options—Digits After Decimal Point** in **14.2 PBX Configuration—[6-2] Feature—Hotel & Charge**.

Value Range

0–9999999

PC Programming Manual References

14.2 PBX Configuration—[6-2] Feature—Hotel & Charge

Feature Guide References

2.22.3 Call Charge Services

11.2 PBX Configuration—[3-2] Group—User Group

Extensions can be assigned to a tenant according to their extension user groups. An extension user group can belong to only one tenant. However, one extension user group can belong to several call pickup groups and several paging groups. A maximum of 8 tenants can be programmed.

◆ User Group Name

Specifies the name of the extension user group.

Value Range

Max. 20 characters

PC Programming Manual References

11.3 PBX Configuration—[3-3] Group—Call Pickup Group
11.4 PBX Configuration—[3-4] Group—Paging Group
12.1.1 PBX Configuration—[4-1-1] Extension—Wired Extension—Extension Settings—Main—◆ User Group
12.2.1 PBX Configuration—[4-2-1] Extension—Portable Station—Extension Settings—Main—◆ User Group

Feature Guide References

5.1.2 Group

◆ Tenant Number

Specifies the tenant to which the extension user group belongs.

Value Range

1–8

PC Programming Manual References

12.1.1 PBX Configuration—[4-1-1] Extension—Wired Extension—Extension Settings
12.2.1 PBX Configuration—[4-2-1] Extension—Portable Station—Extension Settings

Feature Guide References

5.1.2 Group
5.1.3 Tenant Service

11.3 PBX Configuration—[3-3] Group—Call Pickup Group

Extensions can be assigned to a call pickup group according to their extension user groups. One extension user group can belong to up to 8 call pickup groups. A maximum of 64 call pickup groups can be programmed. To assign extension user groups to call pickup groups easily, click **All Setting**.

◆ User Group Name

Indicates the name of the extension user group (reference only).

Value Range

Max. 20 characters

PC Programming Manual References

12.1.1 PBX Configuration—[4-1-1] Extension—Wired Extension—Extension Settings
12.2.1 PBX Configuration—[4-2-1] Extension—Portable Station—Extension Settings

Feature Guide References

2.4.3 Call Pickup
5.1.2 Group

◆ Pickup Group—1st–8th

Selects the call pickup groups that the extension user group belongs to. One extension user group can be assigned to a maximum of 8 call pickup groups on this screen. To assign an extension user group to more than 8 call pickup groups, click **All Setting**.

Value Range

None, 01:–64:

PC Programming Manual References

12.1.1 PBX Configuration—[4-1-1] Extension—Wired Extension—Extension Settings
12.2.1 PBX Configuration—[4-2-1] Extension—Portable Station—Extension Settings

Feature Guide References

2.4.3 Call Pickup
5.1.2 Group

11.3.1 PBX Configuration—[3-3] Group—Call Pickup Group—All Setting

Extensions can be assigned to a call pickup group according to their extension user groups. One extension user group can belong to multiple call pickup groups.

◆ Call Pickup Group Name

Specifies the name of the call pickup group.

Value Range

Max. 20 characters

PC Programming Manual References

12.1.1 PBX Configuration—[4-1-1] Extension—Wired Extension—Extension Settings
12.2.1 PBX Configuration—[4-2-1] Extension—Portable Station—Extension Settings

Feature Guide References

2.4.3 Call Pickup
5.1.2 Group

◆ User Group 1–32

Specifies whether the extension user group belongs to the corresponding pickup group.

Value Range

ON (blue), OFF

PC Programming Manual References

12.1.1 PBX Configuration—[4-1-1] Extension—Wired Extension—Extension Settings
12.2.1 PBX Configuration—[4-2-1] Extension—Portable Station—Extension Settings

Feature Guide References

2.4.3 Call Pickup
5.1.2 Group

11.4 PBX Configuration—[3-4] Group—Paging Group

Extensions can be assigned to a paging group according to their extension user groups. External pagers can also be assigned to a paging group. One extension user group or external pager can belong to multiple paging groups. A maximum of 32 paging groups can be programmed.
To assign external pagers to paging groups, click **External Pager**. To assign extension user groups to paging groups easily, click **All Setting**.

◆ User Group Name

Indicates the name of the extension user group (reference only).

Value Range

Max. 20 characters

PC Programming Manual References

12.1.1 PBX Configuration—[4-1-1] Extension—Wired Extension—Extension Settings
12.2.1 PBX Configuration—[4-2-1] Extension—Portable Station—Extension Settings

Feature Guide References

2.17.1 Paging
5.1.2 Group

◆ Paging Group—1st–8th

Selects the paging groups that the extension user group belongs to. One extension user group can be assigned to a maximum of 8 paging groups on this screen. To assign an extension user group to more than 8 paging groups, click **All Setting**.

Value Range

None, 01–32

PC Programming Manual References

12.1.1 PBX Configuration—[4-1-1] Extension—Wired Extension—Extension Settings
12.2.1 PBX Configuration—[4-2-1] Extension—Portable Station—Extension Settings

Feature Guide References

2.17.1 Paging
5.1.2 Group

11.4.1 PBX Configuration—[3-4] Group—Paging Group—All Setting

Extensions can be assigned to a paging group according to their extension user groups. One extension user group or external pager can belong to multiple paging groups.

◆ Paging Group Name

Specifies the name of the paging group.

Value Range

Max. 20 characters

PC Programming Manual References

12.1.1 PBX Configuration—[4-1-1] Extension—Wired Extension—Extension Settings
12.2.1 PBX Configuration—[4-2-1] Extension—Portable Station—Extension Settings

Feature Guide References

2.17.1 Paging
5.1.2 Group

◆ User Group 1–32

Specifies whether the extension user group belongs to the corresponding paging group.

Value Range

ON (blue), OFF (white)

PC Programming Manual References

12.1.1 PBX Configuration—[4-1-1] Extension—Wired Extension—Extension Settings
12.2.1 PBX Configuration—[4-2-1] Extension—Portable Station—Extension Settings

Feature Guide References

2.17.1 Paging
5.1.2 Group

11.4.2 PBX Configuration—[3-4] Group—Paging Group—External Pager

External pagers can be assigned to a paging group. One external pager can belong to multiple paging groups.

◆ Paging Group Name

Indicates the name of the paging group (reference only).

Value Range

Max. 20 characters

PC Programming Manual References

12.1.1 PBX Configuration—[4-1-1] Extension—Wired Extension—Extension Settings
12.2.1 PBX Configuration—[4-2-1] Extension—Portable Station—Extension Settings

Feature Guide References

2.17.1 Paging
5.1.2 Group

◆ External Pager 1–6

Specifies whether the external pager belongs to the corresponding paging group.

Value Range

ON (blue), OFF

PC Programming Manual References

12.1.1 PBX Configuration—[4-1-1] Extension—Wired Extension—Extension Settings
12.2.1 PBX Configuration—[4-2-1] Extension—Portable Station—Extension Settings

Feature Guide References

2.17.1 Paging
5.1.2 Group

11.5 PBX Configuration—[3-5] Group—Incoming Call Distribution Group

11.5.1 PBX Configuration—[3-5-1] Group—Incoming Call Distribution Group—Group Settings

Extensions can be assigned as members of an incoming call distribution group. Calls to an incoming call distribution group are distributed to its member extensions as programmed. A maximum of 128 incoming call distribution groups can be programmed.
To set the Call Forwarding (FWD) settings of ICD groups easily, click **Group FWD**. To assign extensions to ICD groups and change extension settings, click **Member List**.
For more information on ICD Groups, see "2.2.2.1 Incoming Call Distribution Group Features—SUMMARY" in the Feature Guide.

Main

◆ Floating Extension Number

Specifies the floating extension number of the incoming call distribution group.

Value Range

Max. 5 digits (consisting of 0–9)

◆ Group Name

Specifies the name of the incoming call distribution group.

Value Range

Max. 20 characters

◆ Distribution Method

Selects the method for distributing calls to idle extensions of the incoming call distribution group.

Value Range

Ring, UCD, Priority Hunting

Feature Guide References

2.2.2.2 Group Call Distribution

◆ Call Waiting Distribution

Selects the call waiting distribution method for busy extensions of the incoming call distribution group.

Value Range

All, Distribution

Feature Guide References

2.2.2.2 Group Call Distribution

◆ FWD Mode

Specifies whether extensions in FWD mode ring when a call is received at the incoming call distribution group.

Value Range

No Ring, Ring

PC Programming Manual References

12.1.2 PBX Configuration—[4-1-2] Extension—Wired Extension—FWD/DND
12.2.2 PBX Configuration—[4-2-2] Extension—Portable Station—FWD/DND

Feature Guide References

2.2.2.2 Group Call Distribution

◆ DND Mode

Specifies whether extensions in DND mode ring when a call is received at the incoming call distribution group.

Value Range

No Ring, Ring

PC Programming Manual References

12.1.2 PBX Configuration—[4-1-2] Extension—Wired Extension—FWD/DND
12.2.2 PBX Configuration—[4-2-2] Extension—Portable Station—FWD/DND

Feature Guide References

2.2.2.2 Group Call Distribution

◆ Tenant Number

Specifies the tenant to which the incoming call distribution group belongs, to determine the Time Table and the audio source for the group. (The tenant number corresponds to the Time Table number.)

Value Range

1–8

PC Programming Manual References

10.2 PBX Configuration—[2-2] System—Operator & BGM
10.4 PBX Configuration—[2-4] System—Week Table
14.6 PBX Configuration—[6-6] Feature—Tenant—◆ Music On Hold

Feature Guide References

2.13.4 Music on Hold

5.1.3 Tenant Service

◆ COS

Specifies the COS of the incoming call distribution group. Depending on the COS, calls from certain extensions are restricted as determined by the Internal Call Block feature. Also, when calls are forwarded or overflowed to a trunk, the TRS/Barring assigned for the COS of the incoming call distribution group applies.

Value Range

1–64

PC Programming Manual References

10.7.1 PBX Configuration—[2-7-1] System—Class of Service—COS Settings
10.7.2 PBX Configuration—[2-7-2] System—Class of Service—External Call Block
10.7.3 PBX Configuration—[2-7-3] System—Class of Service—Internal Call Block

Feature Guide References

2.1.2.2 Internal Call Block

◆ CLIP on ICD Group Button

Specifies the CLIP number sent to the network when making calls using the ICD Group button.

Value Range

Max. 16 digits (consisting of 0–9, *, and #)

Feature Guide References

4.1.2.2 Calling/Connected Line Identification Presentation (CLIP/COLP)

Overflow Queuing Busy

◆ Floating Extension Number

Specifies the floating extension number of the incoming call distribution group.

Value Range

Max. 5 digits (consisting of 0–9)

◆ Group Name

Specifies the name of the incoming call distribution group.

Value Range

Max. 20 characters

◆ Queuing Busy—Destination-Day, Lunch, Break, Night

Specifies the overflow destination of calls that cannot be queued in each time mode.

Value Range

Max. 32 digits (consisting of 0–9, *, #, [ ] [Secret], and P [Pause])

PC Programming Manual References

10.4 PBX Configuration—[2-4] System—Week Table

Feature Guide References

2.2.2.6 Overflow Feature

◆ Queuing Busy—Queue Call Capacity

Specifies the number of calls that can wait in a queue.

Value Range

None, 1–100

Feature Guide References

2.2.2.4 Queuing Feature

Overflow No Answer

◆ Floating Extension Number

Specifies the floating extension number of the incoming call distribution group.

Value Range

Max. 5 digits (consisting of 0–9)

◆ Group Name

Specifies the name of the incoming call distribution group.

Value Range

Max. 20 characters

◆ Time out & Manual Queue Redirection—Destination-Day, Lunch, Break, Night

Specifies the overflow destination of queued calls when they are not answered or are redirected by Manual Queue Redirection in each time mode.

Value Range

Max. 32 digits (consisting of 0–9, *, #, [ ] [Secret], and P [Pause])

PC Programming Manual References

10.4 PBX Configuration—[2-4] System—Week Table

Feature Guide References

2.2.2.4 Queuing Feature
2.2.2.6 Overflow Feature

◆ Time out & Manual Queue Redirection Overflow Time

Specifies the length of time calls wait in a queue before they are redirected to the overflow destination.

Value Range

None, 10 × n (n=1–125) s

Feature Guide References

2.2.2.4 Queuing Feature
2.2.2.6 Overflow Feature

◆ Hurry-up Level

Specifies the number of calls to hold in the queue before prompting Manual Queue Redirection by flashing the Hurry-up button.

Value Range

None, 1–30

PC Programming Manual References

12.1.4 PBX Configuration—[4-1-4] Extension—Wired Extension—Flexible Button
12.2.3 PBX Configuration—[4-2-3] Extension—Portable Station—Flexible Button

Feature Guide References

2.2.2.4 Queuing Feature

Queuing Time Table

◆ Floating Extension Number

Specifies the floating extension number of the incoming call distribution group.

Value Range

Max. 5 digits (consisting of 0–9)

◆ Group Name

Specifies the name of the incoming call distribution group.

Value Range

Max. 20 characters

◆ Queuing Time Table—Day, Lunch, Break, Night

Specifies the Queuing Time Table to be used in each time mode.

Value Range

None, Table 1–Table 64

PC Programming Manual References

10.4 PBX Configuration—[2-4] System—Week Table

Feature Guide References

2.2.2.4 Queuing Feature

◆ Queuing Time Table When Extension Ringing

Enables the PBX to play messages/BGM to the caller according to the Queuing Time Table, when the call arrives at an extension without being queued or after being queued.

Value Range

Disable (Ringback Tone), Enable

Miscellaneous

◆ Floating Extension Number

Specifies the floating extension number of the incoming call distribution group.

Value Range

Max. 5 digits (consisting of 0–9)

◆ Group Name

Specifies the name of the incoming call distribution group.

Value Range

Max. 20 characters

◆ Extension No Answer Redirection Time

Specifies the length of time that a call queues at an extension before it is redirected to the next member extension of the incoming call distribution group, in UCD or Priority Hunting distribution method.

Value Range

None, 10 × n (n=1–15) s

Feature Guide References

2.2.2.2 Group Call Distribution
2.2.2.4 Queuing Feature

◆ No. of Unanswered Calls for Automatic Log-out

Specifies the number of consecutive unanswered calls before a member extension is automatically logged out from the incoming call distribution group.

Value Range

None, 1–15

Feature Guide References

2.2.2.7 Log-in/Log-out

◆ Maximum No. of Busy Extension

Specifies the number of extensions that can accept calls simultaneously in the incoming call distribution group.

Value Range

Max.: Call arrives at an idle extension.
1–32: Call will not arrive at an idle extension when the number of busy extensions exceeds the assigned number.

Feature Guide References

2.2.2.2 Group Call Distribution

◆ Last Extension Log-out

Specifies whether the last extension logged-in to the incoming call distribution group is allowed to log out.

Value Range

Disable, Enable

Feature Guide References

2.2.2.7 Log-in/Log-out

◆ VIP Call Mode

Enables VIP Call mode, to prioritise calls received from multiple incoming call distribution groups.

Value Range

Disable, Enable

Feature Guide References

2.2.2.5 VIP Call

◆ Supervisor Extension Number

Specifies the extension number of the incoming call distribution group's supervisor. The supervisor can monitor and control the status of each member of the group using a 6-line display PT. The supervisor extension need not belong to the group.

Value Range

Max. 5 digits (consisting of 0–9)

Feature Guide References

2.2.2.8 Supervisory Feature

◆ Programmed Mailbox No. (16 Digits)

Specifies the mailbox number of the incoming call distribution group's mailbox for Voice Processing Systems (VPS) with DTMF Integration.

Value Range

Max. 16 digits (consisting of 0–9, *, and #)

Group Log / Group FWD

◆ Floating Extension Number

Specifies the floating extension number of the incoming call distribution group.

Value Range

Max. 5 digits (consisting of 0–9)

◆ Group Name

Specifies the name of the incoming call distribution group.

Value Range

Max. 20 characters

◆ Incoming Call Log Memory

Specifies the number of unanswered calls to the incoming call distribution group that can be logged in the call log memory.

Value Range

0–100

Feature Guide References

2.19.2 Incoming Call Log

◆ Group FWD Call from CO—Setting

Indicates the current FWD status for incoming trunk calls (reference only).

Value Range

Off, On

Feature Guide References

2.3.2 Call Forwarding (FWD)

◆ Group FWD Call from CO—Destination

Specifies the forward destination of incoming trunk calls directed to the incoming call distribution group.

Value Range

Max. 32 digits (consisting of 0–9, *, #, [ ] [Secret], and P [Pause])

Feature Guide References

2.3.2 Call Forwarding (FWD)

◆ Group FWD Call from Extension—Setting

Indicates the current FWD status for incoming intercom calls (reference only).

Value Range

Off, On

Feature Guide References

2.3.2 Call Forwarding (FWD)

◆ Group FWD Call from Extension—Destination

Specifies the forward destination of incoming intercom calls directed to the incoming call distribution group.

Value Range

Max. 32 digits (consisting of 0–9, *, #, [ ] [Secret] and P [Pause])

Feature Guide References

2.3.2 Call Forwarding (FWD)

11.5.1.1 PBX Configuration—[3-5-1] Group—Incoming Call Distribution Group—Group Settings—Member List

Each incoming call distribution group can have a maximum of 128 members (extensions) assigned to it, and each member can have its own delayed ringing and Wrap-up time settings. An extension can be a member of multiple incoming call distribution groups. An ICD Group can also contain cellular phones, and network ICD groups (ICD groups at other PBXs in a network) using virtual PS (see **"5.2.4.1 Virtual PS"** in the Feature Guide). The forward destination assigned to a virtual PS (e.g., a cellular phone) can act as a member of an ICD group. Select the desired ICD group (1–128) from the **ICD Group No.** list.
To assign members to the group, enter directly or click **Extension No. Setting** (see **2.1.6 Extension Number Setting**). To copy the members to another group, click **Member list copy**, select the group, and click **OK**.

◆ Extension Number

Specifies the extension number of each member. In addition to the extension numbers of PT, SLT, and PS extensions, floating extension numbers of PS Ring groups can also be specified.

Value Range

Max. 5 digits (consisting of 0–9)

PC Programming Manual References

11.8 PBX Configuration—[3-8] Group—PS Ring Group

Feature Guide References

2.2.2.1 Incoming Call Distribution Group Features—SUMMARY

◆ Extension Name

Indicates the name of the extension (reference only).

Value Range

Max. 20 characters

PC Programming Manual References

11.8 PBX Configuration—[3-8] Group—PS Ring Group

Feature Guide References

2.2.2.1 Incoming Call Distribution Group Features—SUMMARY

◆ Delayed Ring

Specifies the delayed ringing setting of each member. (Applicable when the call distribution method of the incoming call distribution group is set to **Ring**.)

Value Range

Immediate, 1–6 Rings, No Ring

Feature Guide References

2.2.2.2 Group Call Distribution

◆ Wrap-up Timer

Specifies the length of time that must pass after completing a call before the member extension can accept another call.
This timer is used when "◆ **Options—Wrap-up Timer based on**" is set to **"ICD Group Member"** in **11.5.3 PBX Configuration—[3-5-3] Group—Incoming Call Distribution Group—Miscellaneous**.

Value Range

10 × n (n=0–300) s

PC Programming Manual References

11.5.3 PBX Configuration—[3-5-3] Group—Incoming Call Distribution Group—Miscellaneous—◆ Options—Wrap-up Timer based on
12.1.1 PBX Configuration—[4-1-1] Extension—Wired Extension—Extension Settings—Option 8—◆ Wrap-up Timer
12.2.1 PBX Configuration—[4-2-1] Extension—Portable Station—Extension Settings—Option 8—◆ Wrap-up Timer

Feature Guide References

2.2.2.7 Log-in/Log-out

11.5.2 PBX Configuration—[3-5-2] Group—Incoming Call Distribution Group—Queuing Time Table

A Queuing Time Table can contain up to 16 sequences which control how calls waiting in a queue are handled. A maximum of 64 Queuing Time Tables can be programmed.

◆ Queuing Sequence—Sequence 01–16

Specifies the command activated by the corresponding sequence.

Value Range

None: Redirects the call to the next sequence.
Overflow: Redirects the call to the overflow destination when there is no answer.
Disconnect: Disconnects the line.
Sequence 01–16: Redirects the call to a different sequence.
Wait 5 × n (n=1–16) s: If preceded by an OGM, plays the Music on Hold for the specified period of time; if not preceded by an OGM, sends a ringback tone for the specified period of time.
OGM 01–64: Sends a certain OGM.
Queue No.: Announces how many calls precede the caller in the waiting queue.
Queue No. and Time: Announces how many calls precede the caller in the waiting queue and the estimated wait time.

Feature Guide References

2.2.2.4 Queuing Feature
2.2.2.6 Overflow Feature
2.13.4 Music on Hold
2.30.2 Outgoing Message (OGM)

11.5.3 PBX Configuration—[3-5-3] Group—Incoming Call Distribution Group—Miscellaneous

Optional settings related to Incoming Call Distribution Groups can be programmed.

◆ Options—Call Log to ICD Group when ICD Member Answered

Selects whether answered calls to an ICD Group are also logged in the Incoming Call Log for the group, in addition to the log of the extension that answered the call.

Value Range

Disable, Enable

Feature Guide References

2.2.2.1 Incoming Call Distribution Group Features—SUMMARY

◆ Options—Call Log to ICD Group when Overflow Destination Answered

Selects whether the calls to an ICD Group that are redirected and are answered by the overflow destination are also logged in the Incoming Call Log for the group, in addition to the log of the extension that answered the call.

Value Range

Disable, Enable

Feature Guide References

2.2.2.1 Incoming Call Distribution Group Features—SUMMARY

◆ Options—ICD Group Key Mode

Selects whether ICD Group buttons at extensions operate as normal or in Enhanced Phantom button mode. When set to Enhanced Phantom mode, creating an ICD Group button at an extension using PT personal programming automatically registers the extension as a member of the relevant ICD Group. The extension user can also specify the delayed ringing settings.

Value Range

Group DN, Enhanced Phantom

PC Programming Manual References

11.5.1.1 PBX Configuration—[3-5-1] Group—Incoming Call Distribution Group—Group Settings—Member List—◆ Delayed Ring

Feature Guide References

2.2.2.1 Incoming Call Distribution Group Features—SUMMARY

◆ Options—Longest Idle Distribution

Selects whether incoming calls are distributed to idle extensions evenly in order (UCD), or to the extension that has been idle the longest (ACD).

Value Range

Disable (UCD), Enable (ACD)

Feature Guide References

2.2.2.2 Group Call Distribution

◆ Options—Wrap-up Timer based on

Selects whether the ICD Group member wrap-up timer or extension wrap-up timer is used.
If **Extension** is selected here, ◆ **Wrap-up Timer** on **11.5.1.1 PBX Configuration—[3-5-1] Group—Incoming Call Distribution Group—Group Settings—Member List** becomes unavailable. If **ICD Group Member** is selected, ◆ **Wrap-up Timer** on **12.1.1 PBX Configuration—[4-1-1] Extension—Wired Extension—Extension Settings** and **12.2.1 PBX Configuration—[4-2-1] Extension—Portable Station—Extension Settings** become unavailable.

Value Range

Extension: The timer is activated after all calls to or from the extension, including a retrieved call on hold.
ICD Group Member: The timer is only activated after calls to the extension through an ICD Group.

PC Programming Manual References

11.5.1.1 PBX Configuration—[3-5-1] Group—Incoming Call Distribution Group—Group Settings—Member List—◆ Wrap-up Timer
12.1.1 PBX Configuration—[4-1-1] Extension—Wired Extension—Extension Settings—Option 8—◆ Wrap-up Timer
12.2.1 PBX Configuration—[4-2-1] Extension—Portable Station—Extension Settings—Option 8—◆ Wrap-up Timer

Feature Guide References

2.2.2.7 Log-in/Log-out

◆ Options—Overflow immediately when All Logout

Specifies whether overflow redirection is processed when all members of an ICD group are logged out.

Value Range

Enable (Queuing Busy Destination), Disable (Keep Queuing)

Feature Guide References

2.2.2.1 Incoming Call Distribution Group Features—SUMMARY

◆ Options—Call Log for Built-in ACD Report

Specifies whether to log call information for the Built-in ACD Report. This feature requires an activation key.

Value Range

Enable (Logging), Disable

Feature Guide References

2.2.2.1 Incoming Call Distribution Group Features—SUMMARY

◆ Options—ICD Group Call Monitor View—Screen Update Time (s)

Specifies the screen update interval time for the ICD Group Call Monitor View.

Value Range

5–60

Feature Guide References

2.2.2.1 Incoming Call Distribution Group Features—SUMMARY

◆ Options—Announcement of Estimated Waiting Time—Calculated based on (the following time x number of calls in queue)

Specifies the method to announce the estimated wait time to calls waiting in an ICD group queue. The amount of time announced is calculated using the time set here for each call in the queue.

Value Range

Average waiting time: The average wait time is used for calculating the announced amount of wait time.
Predefined time: A set amount of time (10–3600 s) is used for calculating the announced amount of wait time.

Feature Guide References

2.2.2.4 Queuing Feature

◆ Options—Announcement of Estimated Waiting Time—Threshold Time for Special Announce (10-60 min)

Specifies the threshold wait time for when calls waiting in an ICD group queue will hear the special announcement.

Value Range

10–60 min

Feature Guide References

2.2.2.4 Queuing Feature

◆ Options—UM System Guidance—UM System Guidance for Queue No. / Queue No. and Time

Specifies the announcement heard by callers in an ICD queue about the estimated wait time. Select an announcement from the specified Unified Messaging System Guidance messages.

Value Range

Guidance No.1–8

Feature Guide References

2.2.2.4 Queuing Feature

11.5.4 PBX Configuration–[3-5-4] Group—Incoming Call Distribution Group—ACD Supervisor

This screen is only available at Installer level.

Description

After specifying an ICD Group to be monitored, specify a User (User) or User (Administrator) as an ACD supervisor to begin monitoring. The ACD supervisor can monitor an ICD Group, manage and analyse statistical information, and create an ACD report.
For details about ICD Group management by the ACD supervisor, see **8.4 Users—ICDG Management**.

To set the ACD Supervisor

1. Click the button. The **Set ACD Supervisor** screen is displayed.
2. From the users listed in the **Normal User** window, click a user to select it as the ACD supervisor, and then click the right arrow button to move the selected user to the **ACD Supervisor** window. To remove a selected user, click a user on the **ACD Supervisor** window to select it, and then click the left arrow button.
3. Click **OK**.

The ACD supervisor selected above is displayed as follows.

◆ First Name

The first name of the ACD supervisor (reference only).

◆ Last Name

The last name of the ACD supervisor (reference only).

◆ Ext. No.

The extension number of the ACD supervisor (reference only).

To assign the ICD Groups that are monitored by the ACD Supervisor.

1. In the **ICD Group** column, click the **Edit** button for the ACD supervisor. The **Set ACD Supervisor ICD Group** screen is displayed.
2. From the ICD Groups listed in the **Available ICD Group** window, click an ICD Group to select it for assignment to the ACD supervisor, and then click the right arrow button to move the selected ICD Group to the **Selected ICD Group** list. To remove a selected ICD Group, click an ICD Group on the **Selected ICD Group** list to select it, and then click the left arrow button.
3. Click **OK**.

Feature Guide References

2.2.2.9 Supervisory Feature (ACD)

11.6 PBX Configuration—[3-6] Group—Extension Hunting Group

If an extension within an idle extension hunting group is called when it is busy or in DND mode, the call can be redirected to another extension in the same hunting group, according to a pre-programmed hunting type. If there is no idle extension in the group, the call can then be redirected to the overflow destination, which can be different depending on the time mode (day/lunch/break/night). A maximum of 64 hunting groups can be programmed, each containing up to 16 extensions.
To assign members to the group, click **Member List**. To assign extensions as overflow destinations easily, click **Destination Setting** (see **2.1.6 Extension Number Setting**).

◆ Hunting Group Name

Specifies the name of the hunting group.

Value Range

Max. 20 characters

Feature Guide References

2.2.1 Idle Extension Hunting

◆ Hunting Type

Specifies the hunting type for the hunting group.

Value Range

Circular: Circulates until the call is answered or overflowed
Terminated: Terminates at the last extension

Feature Guide References

2.2.1 Idle Extension Hunting
5.1.2 Group

◆ Overflow—Day, Lunch, Break, Night

Specifies the overflow destination of an unanswered call in each time mode.

Value Range

Max. 32 digits (consisting of 0–9, *, #, T [Transfer], [ ] [Secret], P [Pause], and F [Flash])

Feature Guide References

2.2.1 Idle Extension Hunting

11.6.1 PBX Configuration—[3-6] Group—Extension Hunting Group—Member List

Each hunting group can contain up to 16 extensions. Select the hunting group to programme from the **Hunting Group No.** list.
To assign members to the group, enter the extension numbers in ◆ **Extension Number** or click **Extension No. Setting** (see **2.1.6 Extension Number Setting**).

◆ Extension Number

Specifies the extension number of the hunting group member.

Value Range

Max. 5 digits (consisting of 0–9)

PC Programming Manual References

11.6 PBX Configuration—[3-6] Group—Extension Hunting Group

Feature Guide References

2.2.1 Idle Extension Hunting

◆ Extension Name

Indicates the name of the extension, when an extension number is specified in ◆ **Extension Number** above (reference only).

Value Range

Max. 20 characters

PC Programming Manual References

11.6 PBX Configuration—[3-6] Group—Extension Hunting Group

Feature Guide References

2.2.1 Idle Extension Hunting

11.7 PBX Configuration—[3-7] Group—UM Group

11.7.1 PBX Configuration—[3-7-1] Group—UM Group—System Settings

The Unified Messaging (UM) ports of a PBX make up a group, called a UM group. This group has a floating extension number, which can be the destination for incoming calls, redirected calls, transferred calls, etc. When a call is received at the UM group, the Unified Messaging system can direct the caller to leave a voice message or dial a number to reach the desired party.

◆ Call Waiting on UM Group

Enables the queuing of calls when all extension ports of the UM group are busy. (Call Waiting tone is not sent to any UM port.)

Value Range

Disable, Enable

PC Programming Manual References

9.6 PBX Configuration—[1-1] Configuration—Slot—UM Port Property

Feature Guide References

2.2.2.4 Queuing Feature
3.1.1 Unified Messaging System Overview—UM Ports and the UM Group

◆ Intercept to Mailbox for Call to Extension

Enables the PBX to send the mailbox number of the called extension to the Unified Messaging system when a call is redirected to the UM group by Intercept Routing. When the Unified Messaging system receives the mailbox number, the Unified Messaging system answers the call with the appropriate mailbox.

Value Range

Disable, Enable

PC Programming Manual References

9.6 PBX Configuration—[1-1] Configuration—Slot—UM Port Property
12.1.1 PBX Configuration—[4-1-1] Extension—Wired Extension—Extension Settings—Intercept Destination—◆ Intercept Destination—When called party does not answer—Day, Lunch, Break, Night
12.2.1 PBX Configuration—[4-2-1] Extension—Portable Station—Extension Settings—Intercept Destination—◆ Intercept Destination—When called party does not answer—Day, Lunch, Break, Night

Feature Guide References

3.1.1 Unified Messaging System Overview—UM Ports and the UM Group

◆ Overflow to Mailbox for Call to ICD Group

Enables the PBX to send the mailbox number of the called extension to the UM when a call is redirected from an incoming call distribution group to the UM group by Intercept Routing. When the Unified Messaging system receives the mailbox number, it answers the call with the appropriate mailbox.

Value Range

Disable, Enable

Feature Guide References

2.2.2 Incoming Call Distribution Group Features

◆ Transfer Recall to Mailbox

Enables the PBX to send the mailbox number of the transfer destination extension to the Unified Messaging system in these situations: (1) when a call is transferred to an extension by the Call Transfer without Announcement feature using the Automated Attendant (AA) service of the Unified Messaging system, and the call is not answered within a programmed time period; (2) when the Unified Messaging system is assigned as the Transfer Recall destination of a certain extension. When the Unified Messaging system receives the mailbox number, the Unified Messaging system answers the call with the appropriate mailbox.

Value Range

Disable, Enable

PC Programming Manual References

9.6 PBX Configuration—[1-1] Configuration—Slot—UM Port Property

Feature Guide References

3.1.1 Unified Messaging System Overview—UM Ports and the UM Group

11.7.2 PBX Configuration—[3-7-2] Group—UM Group—Unit Settings

A UM group has a floating extension number, which can be assigned as the destination for redirected calls and incoming calls.
To assign extension numbers to the group, click **Member List**. To view a list of all programmed extension numbers and types, click **Extension List View** (see **6.4 Tool—Extension List View**).

◆ Floating Extension No.

Specifies the floating extension number of the UM group.

Value Range

Max. 5 digits (consisting of 0–9)

PC Programming Manual References

9.6 PBX Configuration—[1-1] Configuration—Slot—UM Port Property

Feature Guide References

3.1.1 Unified Messaging System Overview—UM Ports and the UM Group

◆ Group Name

Specifies the name of the UM group, which will be shown on the display of extensions that call the UM group.

Value Range

Max. 20 characters

PC Programming Manual References

9.6 PBX Configuration—[1-1] Configuration—Slot—UM Port Property

Feature Guide References

3.1.1 Unified Messaging System Overview—UM Ports and the UM Group

11.7.2.1 PBX Configuration—[3-7-2] Group—UM Group—Unit Settings—Member List

Displays information about all UM ports that belong to the selected UM group.

◆ No.

Indicates the UM port number (reference only).

Value Range

1–24

PC Programming Manual References

11.7.2 PBX Configuration—[3-7-2] Group—UM Group—Unit Settings

◆ Extension No.

Indicates the extension number assigned to the UM port (reference only).

Value Range

Max. 5 digits (consisting of 0–9)

PC Programming Manual References

11.7.2 PBX Configuration—[3-7-2] Group—UM Group—Unit Settings

Feature Guide References

3.1.1 Unified Messaging System Overview—UM Ports and the UM Group

11.8 PBX Configuration—[3-8] Group—PS Ring Group

A PS ring group is a group of PS extensions that receives incoming calls. Each group has a floating extension number and name. One PS can belong to multiple PS ring groups. A maximum of 32 PS ring groups can be programmed, each containing up to 128 PS extensions.
To add PSs to the PS Ring Group, click **Member List**.

◆ Floating Extension Number

Specifies the floating extension number of the PS ring group.

Value Range

Max. 5 digits (consisting of 0–9)

◆ Group Name

Specifies the name of the PS ring group, which will be shown on the display of extensions that call the PS ring group when ◆ **Incoming Trunk Call Information Display** on this screen is set to **Called Number**.

Value Range

Max. 20 characters

◆ Incoming Trunk Call Information Display

Specifies the information of the incoming trunk call to be shown on the displays of the PSs that belong to the PS ring group. If the caller's name or called party's name is not recognised, the telephone number will be shown.

Value Range

Caller ID, Called Number

11.8.1 PBX Configuration—[3-8] Group—PS Ring Group—Member List

Each PS Ring Group can have up to 128 PS extensions assigned. Select the group to programme from the **PS Ring Group Number** list.
To assign members to the PS Ring Group, enter directly or click **Extension No. Setting** (see **2.1.6 Extension Number Setting**). To copy members to another group, click **Member list copy**, select the group, and click **OK**.

◆ Extension Number

Specifies the extension number of the PS assigned to the PS Ring Group.

Value Range

Max. 5 digits

PC Programming Manual References

11.8 PBX Configuration—[3-8] Group—PS Ring Group
12.2.1 PBX Configuration—[4-2-1] Extension—Portable Station—Extension Settings

◆ Extension Name

Indicates the name of the PS (reference only).

Value Range

Max. 20 characters

PC Programming Manual References

11.8 PBX Configuration—[3-8] Group—PS Ring Group
12.2.1 PBX Configuration—[4-2-1] Extension—Portable Station—Extension Settings

11.9 PBX Configuration—[3-9] Group—Conference Group

A conference group is a group of telephones (extensions or outside destinations) that ring when a conference group call is made. One destination number can be assigned to multiple conference groups. Up to 31 members can be assigned to each of 8 conference groups. To assign members to a group, click **Member List**.
When ◆ **Broadcast Mode** is set to "Disable", only up to 7 members can be assigned to a group. All of these members are automatically allowed to speak when the call starts.

◆ Conference Group Name

Specifies the name of the conference group.

Value Range

Max. 20 characters

Feature Guide References

2.15.1 Conference Group Call

◆ Broadcast Mode

Specifies whether only the original caller can speak or up to 8 people can speak at the start of a conference group call.

Value Range

Disable: The original caller and up to 7 participants can speak at the start of a conference group call.
Enable: Only the original caller can speak at the start of a conference group call.

Feature Guide References

2.15.1 Conference Group Call

◆ Ability to Talk

Enables PT, SLT and PS users to use the push-to-talk feature during a conference group call, when ◆ **Broadcast Mode** is set to "Enable". The push-to-talk feature allows PT, SLT and PS users to speak during the call by pressing any of their dial keys.

Value Range

Disable, Enable

PC Programming Manual References

11.9 PBX Configuration—[3-9] Group—Conference Group—◆ Broadcast Mode

Feature Guide References

2.15.1 Conference Group Call

◆ Automatic Answer w/o Extension Setting

Specifies if the extensions of the conference will automatically answer a conference group call, even if Hands-free Answerback is not set for those extensions. This setting can be used with PTs.

Value Range

Disable, Enable

PC Programming Manual References

11.9 PBX Configuration—[3-9] Group—Conference Group—◆ Broadcast Mode

Feature Guide References

2.15.1 Conference Group Call

11.9.1 PBX Configuration—[3-9] Group—Conference Group—Member List

Up to 31 members can be assigned to each conference group. Select the group to programme from the **Conference Group No.** list.
When ◆ **Broadcast Mode** is set to "Disable", only up to 7 members can be assigned to a group. All of these members are automatically allowed to speak when the call starts.
To copy the numbers to another group, click **Member list copy**, select the group to copy to, and click **OK**.
To assign destinations for conference groups easily, click **Extension No. Setting** (see **2.1.6 Extension Number Setting**).

◆ Dial Number

Specifies the destination number of each member of the conference group.

Value Range

Max. 32 digits (consisting of 0–9, *, #, [ ] [Secret], and P [Pause])

PC Programming Manual References

11.9 PBX Configuration—[3-9] Group—Conference Group

Feature Guide References

2.15.1 Conference Group Call

◆ Extension Name

Indicates the name of the extension, when an extension number is specified in ◆ **Dial Number** above (reference only).

Value Range

Max. 20 characters

PC Programming Manual References

12.1.1 PBX Configuration—[4-1-1] Extension—Wired Extension—Extension Settings

Feature Guide References

2.15.1 Conference Group Call

11.10 PBX Configuration—[3-10] Group—P2P Group

Settings for peer-to-peer (P2P) groups can be programmed.

◆ P2P Group Name

Specifies the name of the P2P group.

Value Range

Max. 20 characters

Feature Guide References

5.2.3 Peer-to-Peer (P2P) Connection

◆ Bandwidth Control

Specifies whether to use the bandwidth precedence setting of the P2P group for calling among different P2P groups.

Value Range

Disable, Enable

Feature Guide References

5.2.3 Peer-to-Peer (P2P) Connection

11.11 PBX Configuration—[3-11] Group—VM(DPT) Group

11.11.1 PBX Configuration—[3-11-1] Group—VM(DPT) Group—System Settings

A Panasonic Voice Processing System (VPS) with DPT Integration can be connected to DPT ports of the PBX. The DPT ports that are connected to the VPS are called a VM (DPT) Group. 2 VM (DPT) Groups can be programmed.

◆ Call Waiting on VM Group

Enables the queuing of calls when all extension ports of the VM (DPT) group are busy. (Call Waiting tone is not sent to any VM port.)

Value Range

Disable, Enable

PC Programming Manual References

9.22 PBX Configuration—[1-1] Configuration—Slot—Extension—Port Property

Feature Guide References

2.2.2.4 Queuing Feature
2.28.1 Voice Mail (VM) Group

◆ Intercept to Mailbox for Call to Extension

Enables the PBX to send the mailbox number of the called extension to the VPS when a call is redirected to the VM (DPT) group by Intercept Routing. When the VPS receives the mailbox number, the VPS answers the call with the appropriate mailbox.

Value Range

Disable, Enable

PC Programming Manual References

9.22 PBX Configuration—[1-1] Configuration—Slot—Extension—Port Property
12.1.1 PBX Configuration—[4-1-1] Extension—Wired Extension—Extension Settings—Intercept Destination—◆ Intercept Destination—When called party does not answer—Day, Lunch, Break, Night
12.2.1 PBX Configuration—[4-2-1] Extension—Portable Station—Extension Settings—Intercept Destination—◆ Intercept Destination—When called party does not answer—Day, Lunch, Break, Night

Feature Guide References

2.28.1 Voice Mail (VM) Group

◆ Overflow to Mailbox for Call to ICD Group

Enables the PBX to send the mailbox number of the called extension to the VM when a call is redirected from an incoming call distribution group to the VM group by Intercept Routing. When the VPS receives the mailbox number, it answers the call with the appropriate mailbox.

Value Range

Disable, Enable

Feature Guide References

2.28.1 Voice Mail (VM) Group
2.2.2 Incoming Call Distribution Group Features

◆ Transfer Recall to Mailbox

Enables the PBX to send the mailbox number of the transfer destination extension to the VPS in these situations: (1) when a call is transferred to an extension by the Call Transfer without Announcement feature using the Automated Attendant (AA) service of the VPS, and the call is not answered within a programmed time period; (2) when the VPS is assigned as the Transfer Recall destination of a certain extension. When the VPS receives the mailbox number, the VPS answers the call with the appropriate mailbox.

Value Range

Disable, Enable

PC Programming Manual References

9.22 PBX Configuration—[1-1] Configuration—Slot—Extension—Port Property

Feature Guide References

2.28.1 Voice Mail (VM) Group
2.28.3 Voice Mail DPT (Digital) Integration

11.11.2 PBX Configuration—[3-11-2] Group—VM(DPT) Group—Unit Settings

A VM (DPT) group has a floating extension number, which can be assigned as the destination for redirected calls and incoming calls.
To assign extension numbers to the group, click Member List. To view a list of all programmed extension numbers and types, click Extension List View.

◆ Floating Extension No.

Specifies the floating extension number of the VM (DPT) group.

Value Range

Max. 5 digits (consisting of 0–9)

PC Programming Manual References

9.22 PBX Configuration—[1-1] Configuration—Slot—Extension—Port Property

Feature Guide References

2.28.1 Voice Mail (VM) Group
2.28.3 Voice Mail DPT (Digital) Integration

◆ Group Name

Specifies the name of the VM (DPT) group, which will be shown on the display of extensions that call the VM (DPT) group.

Value Range

Max. 20 characters

PC Programming Manual References

9.22 PBX Configuration—[1-1] Configuration—Slot—Extension—Port Property

Feature Guide References

2.28.1 Voice Mail (VM) Group
2.28.3 Voice Mail DPT (Digital) Integration

Centralised VM Unit Setting

◆ Floating Extension No. (TIE)

Specifies the floating extension number of the centralised VM (DPT) group. This floating extension number must start with the number used to access a TIE line or the extensions of another PBX.

Value Range

Max. 8 digits (consisting of 0–9, *, and #)

PC Programming Manual References

10.6.1 PBX Configuration—[2-6-1] System—Numbering Plan—Main—◆ TIE Line Access
10.6.1 PBX Configuration—[2-6-1] System—Numbering Plan—Main—Other PBX Extension

Feature Guide References

2.28.1 Voice Mail (VM) Group
2.28.3 Voice Mail DPT (Digital) Integration
4.2.5.2 Centralised Voice Mail

◆ Group Name

Specifies the name of the centralised VM (DPT) group, which will be shown on the display of extensions that call the VM (DPT) group.

Value Range

Max. 20 characters

Feature Guide References

2.28.1 Voice Mail (VM) Group
2.28.3 Voice Mail DPT (Digital) Integration
4.2.5.2 Centralised Voice Mail

11.11.2.1 PBX Configuration—[3-11-2] Group—VM(DPT) Group—Unit Settings—Member List

Displays information on the settings of all relevant ports. Only ports set to VM(DPT) in ◆ DPT Type—Type of 9.22 PBX Configuration—[1-1] Configuration—Slot—Extension—Port Property will be displayed. In addition, the other information displayed here can also be set in 9.22 PBX Configuration—[1-1] Configuration—Slot—Extension—Port Property.

◆ Shelf

Indicates the shelf position (reference only).

Value Range

Shelf number

PC Programming Manual References

11.11.2 PBX Configuration—[3-11-2] Group—VM(DPT) Group—Unit Settings

◆ Slot

Indicates the slot position (reference only).

Value Range

Slot number

PC Programming Manual References

11.11.2 PBX Configuration—[3-11-2] Group—VM(DPT) Group—Unit Settings

◆ Port

Indicates the port number (reference only).

Value Range

Port number

PC Programming Manual References

11.11.2 PBX Configuration—[3-11-2] Group—VM(DPT) Group—Unit Settings

Feature Guide References

5.2.6 Extension Port Configuration

◆ VM Unit No.

Indicates the unit number of the connected VPS (reference only).

Value Range

1, 2

PC Programming Manual References

11.11.2 PBX Configuration—[3-11-2] Group—VM(DPT) Group—Unit Settings

Feature Guide References

2.28.1 Voice Mail (VM) Group

◆ VM Port No.

Indicates the VM port number for the port (reference only).

Value Range

1-12

PC Programming Manual References

11.11.2 PBX Configuration—[3-11-2] Group—VM(DPT) Group—Unit Settings

Feature Guide References

2.28.1 Voice Mail (VM) Group

◆ Extension No.

Indicates the extension number assigned to the VM port (reference only).

Value Range

Max. 5 digits (consisting of 0–9)

PC Programming Manual References

11.11.2 PBX Configuration—[3-11-2] Group—VM(DPT) Group—Unit Settings
11.12.2 PBX Configuration—[3-12-2] Group—VM(DTMF) Group—Group Settings

Feature Guide References

2.28.1 Voice Mail (VM) Group
2.28.3 Voice Mail DPT (Digital) Integration

◆ Extension Name

Indicates the name of the extension (reference only).

Value Range

Max. 20 characters

PC Programming Manual References

11.11.2 PBX Configuration—[3-11-2] Group—VM(DPT) Group—Unit Settings

Feature Guide References

2.28.1 Voice Mail (VM) Group
2.28.3 Voice Mail DPT (Digital) Integration

11.12 PBX Configuration—[3-12] Group—VM(DTMF) Group

11.12.1 PBX Configuration—[3-12-1] Group—VM(DTMF) Group—System Settings

A Panasonic Voice Processing System (VPS) with DTMF Integration can be connected to SLT ports of the PBX. The SLT ports that are connected to the VPS are called a VM (DTMF) Group. 2 VM (DTMF) Groups can be programmed. For more information on Voice Mail groups and DTMF integration, see 2.28.1 Voice Mail (VM) Group and 2.28.2 Voice Mail DTMF Integration in the Feature Guide.

◆ VM DTMF Status Signal—Ringback Tone

Specifies the DTMF status signal the PBX sends to the VPS when the called extension is ringing.

Value Range

Max. 4 digits (consisting of 0–9, *, #, and P [pause])

◆ VM DTMF Status Signal—Busy Tone

Specifies the DTMF status signal the PBX sends to the VPS when the called extension is busy.

Value Range

Max. 4 digits (consisting of 0–9, *, #, and P [pause])

◆ VM DTMF Status Signal—Reorder Tone

Specifies the DTMF status signal the PBX sends to the VPS when the dialled number is invalid.

Value Range

Max. 4 digits (consisting of 0–9, *, #, and P [pause])

◆ VM DTMF Status Signal—DND Tone

Specifies the DTMF status signal the PBX sends to the VPS when the called extension is in DND mode.

Value Range

Max. 4 digits (consisting of 0–9, *, #, and P [pause])

◆ VM DTMF Status Signal—Answer

Specifies the DTMF status signal the PBX sends to the VPS when the called extension has answered the call.

Value Range

Max. 4 digits (consisting of 0–9, *, #, and P [pause])

◆ VM DTMF Status Signal—Confirm

Specifies the DTMF status signal the PBX sends to the VPS when a certain feature (e.g., Message Waiting) has been successfully set or cancelled on an extension.

Value Range

Max. 4 digits (consisting of 0–9, *, #, and P [pause])

◆ VM DTMF Status Signal—Disconnect

Specifies the DTMF status signal the PBX sends to the VPS when the caller hangs up.

Value Range

Max. 4 digits (consisting of 0–9, *, #, and P [pause])

◆ VM DTMF Status Signal—FWD to VM Ringback Tone

Specifies the DTMF status signal the PBX sends to the VPS when the call has been forwarded to the VPS and the PBX is calling another port of the VPS.

Value Range

Max. 4 digits (consisting of 0–9, *, #, and P [pause])

◆ VM DTMF Status Signal—FWD to VM Busy Tone

Specifies the DTMF status signal the PBX sends to the VPS when the call has been forwarded to the VPS and all ports of the VPS are busy.

Value Range

Max. 4 digits (consisting of 0–9, *, #, and P [pause])

◆ VM DTMF Status Signal—FWD to Extension Ringback Tone

Specifies the DTMF status signal the PBX sends to the VPS when the call has been forwarded to another extension and the PBX is calling the destination extension.

Value Range

Max. 4 digits (consisting of 0–9, *, #, and P [pause])

◆ VM DTMF Command—Recording Message

Specifies the DTMF command the PBX sends to the VPS when a call is forwarded, intercepted, or transferred to the VPS, so that the caller can leave a message in a certain mailbox.

Value Range

Max. 16 digits (consisting of 0–9, *, #, H [mailbox number], and P [pause])

◆ VM DTMF Command—Listening Message

Specifies the DTMF command the PBX sends to the VPS when an extension user answers a message waiting notification from the VPS, so that the extension user can retrieve a new message in a certain mailbox without having to dial the mailbox number manually.

Value Range

Max. 16 digits (consisting of 0–9, *, #, H [mailbox number], and P [pause])

Feature Guide References

2.20.1 Message Waiting

◆ VM DTMF Command—Switching to AA

Specifies the DTMF command the PBX sends to the VPS to switch from VM Service Mode to AA Service Mode.

Value Range

Max. 16 digits (consisting of 0–9, *, #, H [mailbox number], and P [pause])

◆ VM DTMF Command—Switching to VM

Specifies the DTMF command the PBX sends to the VPS to switch from AA Service Mode to VM Service Mode.

Value Range

Max. 16 digits (consisting of 0–9, *, #, H [mailbox number], and P [pause])

◆ Timing—DTMF Length for VM

Specifies the length of DTMF signals the PBX sends to the VPS.

Value Range

80 ms, 160 ms

◆ Timing—Inter-digit Time

Specifies the length of pause time between DTMF signals the PBX sends to the VPS.

Value Range

80 ms, 160 ms

◆ Timing—Waiting Time before Sending Follow on ID

Specifies the length of time that the PBX waits before sending the Follow on ID to the VPS after the VPS has answered a call.

Value Range

0.5 s, 1.0 s, 1.5 s, 2.0 s

◆ Timing—Waiting Time before Sending VM DTMF Status Signal

Specifies the length of time that the PBX waits before sending the DTMF status signal to the VPS after the VPS has finished dialling.

Value Range

0.5 s, 1.0 s, 1.5 s, 2.0 s

◆ Others—Call Waiting on VM Group

Enables the queuing of calls when all extension ports of the VM (DTMF) group are busy. (Call Waiting tone is not sent to any VM port.)

Value Range

Disable, Enable

Feature Guide References

2.2.2.4 Queuing Feature

◆ Others—FWD to the VPS Sequence

Specifies which DTMF commands the VPS receives from the PBX when a call is forwarded to the VPS, so that the VPS can answer the call either with a mailbox or in the AA service mode. It is also possible to send no DTMF signal to the VPS.

Value Range

None, Answer by Mailbox, AA

◆ Others—Intercept Routing to the VPS Sequence

Specifies which DTMF commands the VPS receives from the PBX when a call is intercepted to the VPS, so that the VPS can answer the call either with a mailbox or in the AA service mode. It is also possible to send no DTMF signal to the VPS.

Value Range

None, Answer by Mailbox, AA

◆ Others—Mailbox for Extension

Specifies whether the mailboxes use the same numbers as the extensions and incoming call distribution groups, or use different numbers as programmed for each extension or incoming call distribution group.

Value Range

Extension Number, Programmed Mailbox Number

PC Programming Manual References

11.5.1 PBX Configuration—[3-5-1] Group—Incoming Call Distribution Group—Group Settings
12.1.1 PBX Configuration—[4-1-1] Extension—Wired Extension—Extension Settings
12.2.1 PBX Configuration—[4-2-1] Extension—Portable Station—Extension Settings

◆ Others—Message Waiting Lamp Control

Specifies whether the PBX or VPS cancels the Message Waiting feature (e.g., turning off the MESSAGE button light) when an extension user answers the message waiting notification from the VPS.

Value Range

By PBX, BY VM

11.12.2 PBX Configuration—[3-12-2] Group—VM(DTMF) Group—Group Settings

A VM (DTMF) group has a floating extension number, and can be assigned as the destination for redirected calls and incoming calls. To assign members to the group, click **Member List**. To view a list of all programmed extension numbers and types, click **Extension List View**.

◆ Floating Ext. No.

Specifies the floating extension number of the VM (DTMF) group.

Value Range

Max. 5 digits (consisting of 0–9)

Feature Guide References

2.28.1 Voice Mail (VM) Group

◆ Group Name

Specifies the name of the VM (DTMF) group, which will be shown on the display of extensions that call the VM (DTMF) group.

Value Range

Max. 20 characters

Feature Guide References

2.28.1 Voice Mail (VM) Group

◆ Type

Specifies the initial service mode in which the VPS answers calls.

Value Range

AA, VM

Feature Guide References

2.28.2 Voice Mail DTMF Integration

11.12.2.1 PBX Configuration—[3-12-2] Group—VM(DTMF) Group—Group Settings—Member List

Select the group to programme from the **VM(DTMF) Group Number** list.
To assign members to the group, enter directly or click **Extension No. Setting** (see **2.1.6 Extension Number Setting**). To copy members to another group, click **Member list copy**, select the group, and then click **OK**.

◆ Extension Number of the SLT Port Connected to VM

Specifies the extension number assigned to the SLT port that is connected to the VPS.

Value Range

Max. 5 digits (consisting of 0–9)

PC Programming Manual References

11.12.2 PBX Configuration—[3-12-2] Group—VM(DTMF) Group—Group Settings

Feature Guide References

2.28.2 Voice Mail DTMF Integration

◆ Extension Name

Indicates the name of the extension (reference only).

Value Range

Max. 20 characters

PC Programming Manual References

11.12.2 PBX Configuration—[3-12-2] Group—VM(DTMF) Group—Group Settings

Feature Guide References

2.28.2 Voice Mail DTMF Integration

Section 12

PBX Configuration—[4] Extension

This section serves as reference operating instructions for the Extension menu of the PBX Configuration Menu of the Setup screen of Web Maintenance Console.

12.1 PBX Configuration—[4-1] Extension—Wired Extension

12.1.1 PBX Configuration—[4-1-1] Extension—Wired Extension—Extension Settings

For each slot in which an extension card is installed, a certain number of extension ports are displayed. For each extension port, various extension settings can be assigned.
To search for a specific extension, enter the extension number or the extension name in the search box and click **Find Next**.
To copy the settings of an extension to another extension, click **Copy to**. The copied data includes FWD/DND, personal speed dialling, and flexible button settings.
To assign a set of CLIP numbers automatically, click **CLIP Generate**.
The **Shelf**, **Slot**, and **Port** for each item are displayed for your reference. For details, see **Common Programming Reference Items** in **9.1 PBX Configuration—[1-1] Configuration—Slot**.

Main

◆ Extension Number

Specifies the extension number of the extension.

Value Range

Max. 5 digits (consisting of 0–9)

◆ Extension Name

Specifies the name of the extension.

Value Range

Max. 20 characters

◆ Port Type

Indicates the extension port type (reference only).

Value Range

DPT: DPT port (DLC)
SLT: SLT port (MCSLC)
S-Hybrid: Super Hybrid port (DHLC)
S-Hybrid(SLT): XDP port of Super Hybrid port (DHLC)
S-Hybrid(S-DPT): Digital XDP port of Super Hybrid port (DHLC)
DPT(S-DPT): Digital XDP port of DPT port (DLC)
ISDN: ISDN port (PRI)
IP-EXT: IP-Extension port (V-IPEXT)
SIP: General SIP Extension port (V-SIPEXT)
SIP-MLT: KX-UT series SIP phone Extension port (V-UTEXT)
UM: Unified Messaging System Extension port

◆ Telephone Type

Indicates the type of telephone connected to the extension port (reference only).

Value Range

DPT (15V)/DPT (40V): DPT is connected.
APT (15V): APT is connected.
DSS: DSS Console is connected.
VM: VPS is connected.
ISDN-Extension: ISDN telephone is connected.
CS: CS is connected.
IP-PT: IP-PT belonging to the V-IPEXT card is connected.
UT: KX-UT series SIP phone is connected.
SIP: General SIP Extension is connected.
S-PS: SIP Portable Station is connected.
SIP-CS: SIP Cell Station is connected.
CS-M: High-density CS is connected with its master port.
CS-S1–3: High-density CS is connected with its slave port.
No Connection: No telephone is connected.
UNKNOWN: SLT is connected (or no telephone is connected to the Super Hybrid or SLT port).

◆ User Group

Specifies the extension user group to which the extension belongs. Extension user groups are used to compose tenants, call pickup groups and paging groups.

Value Range

1–32

Feature Guide References

5.1.2 Group
5.1.3 Tenant Service

◆ COS

Specifies the COS of the extension.

Value Range

1–64

PC Programming Manual References

10.7.1 PBX Configuration—[2-7-1] System—Class of Service—COS Settings

Feature Guide References

5.1.1 Class of Service (COS)

◆ Extension PIN

Specifies the PIN of the extension.

CAUTION

There is a risk that fraudulent telephone calls will be made if a third party discovers a personal identification number (PIN) (verification code PIN or extension PIN) of the PBX.
The cost of such calls will be billed to the owner/renter of the PBX.
To protect the PBX from this kind of fraudulent use, we strongly recommend:

a. Keeping PINs secret.
b. Selecting complex, random PINs that cannot be easily guessed.
c. Changing PINs frequently.

To change an Extension PIN:

1. Click **Edit** under **Extension PIN** for the extension to change.
2. In the window that appears, enter the new extension PIN and then enter it again to confirm it.
3. Click **OK**.

Value Range

Max. 10 digits (consisting of 0–9)

Feature Guide References

2.24.1 Extension Personal Identification Number (PIN)

Intercept Destination

◆ Extension Number

Specifies the extension number of the extension.

Value Range

Max. 5 digits (consisting of 0–9)

◆ Extension Name

Specifies the name of the extension.

Value Range

Max. 20 characters

◆ Intercept Destination—When called party does not answer—Day, Lunch, Break, Night

Specifies the Intercept Routing destination of calls in each time mode for Intercept Routing–No Answer and Intercept Routing–DND.
Note that Intercept Routing–Busy calls are routed using ◆ **Intercept Destination—When Called Party is Busy** below.

Value Range

Max. 32 digits (consisting of 0–9, *, #, [ ] [Secret], and P [Pause])

PC Programming Manual References

12.1.1 PBX Configuration—[4-1-1] Extension—Wired Extension—Extension Settings—Intercept Destination—◆ Intercept Destination—When Called Party is Busy

Feature Guide References

2.1.1.5 Intercept Routing

◆ Intercept Destination—When Called Party is Busy

Specifies the Intercept Routing destination of calls when the extension is busy.

Value Range

Max. 32 digits (consisting of 0–9, *, #, [ ] [Secret], and P [Pause])

Feature Guide References

2.1.1.5 Intercept Routing

Intercept No Answer Time

◆ Extension Number

Specifies the extension number of the extension.

Value Range

Max. 5 digits (consisting of 0–9)

◆ Extension Name

Specifies the name of the extension.

Value Range

Max. 20 characters

◆ Intercept No Answer Time—Day, Lunch, Break, Night

Specifies the length of time until an unanswered call is redirected to the intercept routing destination in each time mode.
When this setting is set to "0", the system timer is used.

Value Range

0–240 s

PC Programming Manual References

10.3 PBX Configuration—[2-3] System—Timers & Counters—Dial / IRNA / Recall / Tone—◆ Intercept Routing No Answer (IRNA)—Day (s), Lunch (s), Break (s), Night (s)

Feature Guide References

2.1.1.5 Intercept Routing

CLIP

◆ Extension Number

Specifies the extension number of the extension.

Value Range

Max. 5 digits (consisting of 0–9)

◆ Extension Name

Specifies the name of the extension.

Value Range

Max. 20 characters

◆ CLIP ID

Specifies the CLIP number sent to the public network to show on the called party's telephone display when making a trunk call.

Value Range

Max. 16 digits (consisting of 0–9, *, and #)

Feature Guide References

4.1.2.2 Calling/Connected Line Identification Presentation (CLIP/COLP)

◆ CLIP on Extension/CO

Selects the CLIP number to show on the called party's telephone.

Value Range

Extension: Show the CLIP number specified in ◆ **CLIP ID**.
CO: Show the CLIP number specified in ◆ **Subscriber Number** in **9.26 PBX Configuration—[1-1] Configuration—Slot—Port Property - PRI Port**.

PC Programming Manual References

9.26 PBX Configuration—[1-1] Configuration—Slot—Port Property - PRI Port—CO Setting—◆ Subscriber Number
12.1.1 PBX Configuration—[4-1-1] Extension—Wired Extension—Extension Settings—CLIP—◆ CLIP ID

Feature Guide References

4.1.2.2 Calling/Connected Line Identification Presentation (CLIP/COLP)

◆ CLIR

Specifies whether to restrict the display of the CLIP number on the called party's telephone when making a public network trunk call.

Value Range

Disable, Enable

Feature Guide References

4.1.2.2 Calling/Connected Line Identification Presentation (CLIP/COLP)

◆ COLR

Specifies whether to restrict the display of the CLIP number of the extension on the caller's telephone display when answering a call.

Value Range

Disable, Enable

Feature Guide References

4.1.2.2 Calling/Connected Line Identification Presentation (CLIP/COLP)

UM

◆ Extension Number

Specifies the extension number of the extension.

Value Range

Max. 5 digits (consisting of 0–9)

◆ Extension Name

Specifies the name of the extension.

Value Range

Max. 20 characters

◆ Two-way Recording

Specifies whether to enable the two-way recording feature for the extension using the Unified Messaging system.

Value Range

Enable, Disable

Feature Guide References

3.2.2.30 Two-way Record/Two-way Transfer

Option 1

◆ Extension Number

Specifies the extension number of the extension.

Value Range

Max. 5 digits (consisting of 0–9)

◆ Extension Name

Specifies the name of the extension.

Value Range

Max. 20 characters

◆ Wireless XDP / Shared Extension

Specifies the extension number of the PS with which Wireless XDP Parallel Mode is established. To enable Wireless XDP Parallel Mode, the PS must be turned off once and then turned on after assigning this setting. This setting also specifies the sub extension for the main extension of a one-numbered extension.

Value Range

Max. 5 digits (consisting of 0–9)

Feature Guide References

2.11.11 One-numbered Extension

◆ Ring Pattern Table

Specifies the Ring Tone Pattern Table to be used by the extension.

Value Range

1–8

PC Programming Manual References

10.8.1 PBX Configuration—[2-8-1] System—Ring Tone Patterns—Call from CO
10.8.2 PBX Configuration—[2-8-2] System—Ring Tone Patterns—Call from DOORPHONE
10.8.3 PBX Configuration—[2-8-3] System—Ring Tone Patterns—Call from Others

Feature Guide References

2.1.3.2 Ring Tone Pattern Selection

◆ Programmed Mailbox No.

Specifies the mailbox number of the incoming call distribution group's mailbox for Voice Processing Systems (VPS) with DTMF Integration.

Value Range

Max. 16 digits (consisting of 0–9, *, and #)

◆ Transfer Recall Destination

Specifies the transfer recall destination when an extension user transfers a call with the Call Transfer without Announcement feature and the transferred call is not answered within a certain time period.

Value Range

Max. 5 digits (consisting of 0–9)

Feature Guide References

2.12.1 Call Transfer

◆ ARS Itemised Code

Specifies the itemised billing code used by the ARS feature for identifying calls made from the extension for accounting and billing purposes.

Value Range

Max. 10 digits (consisting of 0–9, *, and #)

PC Programming Manual References

16.5 PBX Configuration—[8-5] ARS—Carrier

Feature Guide References

2.7.6 Verification Code Entry
2.8.1 Automatic Route Selection (ARS)

Option 2

◆ Extension Number

Specifies the extension number of the extension.

Value Range

Max. 5 digits (consisting of 0–9)

◆ Extension Name

Specifies the name of the extension.

Value Range

Max. 20 characters

◆ Manual C. Waiting for Extension Call

Selects the method of receiving call waiting notification from other extensions.

Value Range

Off: No notification
BSS: Tone from the handset or built-in speaker
OHCA: Voice from the built-in speaker

W-OHCA: Voice from the handset

Feature Guide References

2.1.3.3 Call Waiting
2.10.4.1 Second Call Notification to Busy Extension—SUMMARY

◆ Automatic C. Waiting

Specifies whether to receive call waiting notifications for calls from a trunk, doorphone calls, and calls via an incoming call distribution group.

Value Range

Off, On

Feature Guide References

2.1.3.3 Call Waiting

◆ Pickup Dial Set

Sets or cancels the Hot Line feature. The number specified in ◆ **Pickup Dial No.** on this screen is dialled automatically after going off-hook when the Hot Line feature is active.

Value Range

Off, On

PC Programming Manual References

10.3 PBX Configuration—[2-3] System—Timers & Counters—Dial / IRNA / Recall / Tone—◆ Dial—Hot Line (Pickup Dial) Start (s)

Feature Guide References

2.6.6 Hot Line

◆ Pickup Dial No.

Specifies the number to be dialled automatically after going off-hook when the Hot Line feature is active.

Value Range

Max. 32 digits (consisting of 0–9, *, #, T [Transfer], [ ] [Secret], P [Pause], and F [Flash])

Feature Guide References

2.6.6 Hot Line

◆ Data Mode

Sets or cancels the protection against tones or interruptions from other extensions during communication.

Value Range

Off, On

Feature Guide References

2.11.5 Data Line Security

Option 3

◆ Extension Number

Specifies the extension number of the extension.

Value Range

Max. 5 digits (consisting of 0–9)

◆ Extension Name

Specifies the name of the extension.

Value Range

Max. 20 characters

◆ Call Pickup Deny

Specifies whether calls can be picked up by other extensions.

Value Range

Disable: Allows other extension users to pick up calls to your extension
Enable: Prevents other extension users from picking up calls to your extension

Feature Guide References

2.4.3 Call Pickup

◆ Executive Override Deny

Specifies whether calls can be interrupted by other extensions.

Value Range

Disable: Allows other extension users to interrupt an existing call
Enable: Prevents other extension users from interrupting an existing call

Feature Guide References

2.10.2 Executive Busy Override

◆ Absent Message

Specifies the Personal Absent Message which, unlike the System Absent Message, can be customised for each extension.

Value Range

Max. 16 characters

Feature Guide References

2.20.2 Absent Message

◆ Charge Limit

Specifies the maximum limit of call charges allowed for the extension. When this limit is reached, the extension cannot be used to make further trunk calls.
The number of decimal places that can be specified here depends on the value set in ◆ **Charge Options—Digits After Decimal Point** in **14.2 PBX Configuration—[6-2] Feature—Hotel & Charge**.

Value Range

0–9999999

PC Programming Manual References

14.2 PBX Configuration—[6-2] Feature—Hotel & Charge

Feature Guide References

2.7.2 Budget Management

◆ Intercom Call by Voice

Selects the method of receiving intercom calls. When **Deny Voice Call** is selected, the extension will always ring when receiving calls, regardless of how the caller wants to make the call.

Value Range

Tone Call, Voice Call, Deny Voice Call

Feature Guide References

2.5.3 Intercom Call

Option 4

◆ Extension Number

Specifies the extension number of the extension.

Value Range

Max. 5 digits (consisting of 0–9)

◆ Extension Name

Specifies the name of the extension.

Value Range

Max. 20 characters

◆ Outgoing Preferred Line

Selects the line to be seized after going off-hook to make a call.

Value Range

No Line: No line is seized.
Idle: An idle trunk is seized automatically from the programmed trunk groups.
ICM/PDN: An extension line is seized, or, for a PDN extension, an idle PDN button is selected.
F-1–F-84: A trunk programmed for a flexible button (F-1–F-84) is seized. A flexible button customised as a Single-CO, Group-CO, Loop-CO, or ICD Group button must be selected.

PC Programming Manual References

12.1.4 PBX Configuration—[4-1-4] Extension—Wired Extension—Flexible Button

Feature Guide References

2.5.5.2 Line Preference—Outgoing

◆ Incoming Preferred Line

Selects the line on which an incoming call is answered after going off-hook.
Note that even if a specific PDN button is selected here, a call ringing at any PDN button on the extension will be answered when going off-hook.

Value Range

No Line: No line is selected. Select a line by pressing the desired Line Access button to answer a call.
Ringing Line: The longest ringing call is selected.
PDN: The call arriving at any PDN button is selected.
F-1–F-84: The call arriving at a flexible button (F-1–F-84) is selected. A flexible button customised as a Single-CO, Group-CO, Loop-CO, or ICD Group button must be selected.

PC Programming Manual References

12.1.4 PBX Configuration—[4-1-4] Extension—Wired Extension—Flexible Button

Feature Guide References

2.4.2 Line Preference—Incoming

◆ Call Waiting Tone Type

Selects the type of Call Waiting tone sent to the busy extension.

Value Range

CW Tone 1, CW Tone 2

Feature Guide References

2.10.4.2 Call Waiting Tone

◆ LCS Recording Mode

Specifies whether to continue or stop recording the message in the extension's mailbox when the extension user answers a call that was being monitored.

Value Range

Stop Record, Keep Record

Feature Guide References

3.1.1 Unified Messaging System Overview

◆ LCS Answer Mode

Specifies whether the extension's mailbox is monitored in Hands-free or Private mode.

Value Range

Hands free: Monitor through the built-in speaker
Private: Monitor through the handset or the built-in speaker after hearing a warning tone

Feature Guide References

2.11.1 Hands-free Operation
3.1.1 Unified Messaging System Overview

Option 5

◆ Extension Number

Specifies the extension number of the extension.

Value Range

Max. 5 digits (consisting of 0–9)

◆ Extension Name

Specifies the name of the extension.

Value Range

Max. 20 characters

◆ Display Language

Selects the display language of the extension telephone.

Value Range

Language1–Language5

Feature Guide References

2.21.4 Display Information

◆ Incoming Call Display

Selects which caller information is shown on the first line of the extension's display.

Value Range

Caller ID Name, CO Line Name, DDI/DID Name

Feature Guide References

2.21.4 Display Information

◆ Automatic LCD Switch when Start Talking

Enables the first line of the display to show the call duration automatically after answering a trunk call.

Value Range

Disable, Enable

Feature Guide References

2.21.4 Display Information

◆ Key Pad Tone

Specifies whether key pad tones are heard when dialling.

Value Range

Off, On

◆ Automatic Answer for CO Call

Enables the extension to answer an incoming trunk call automatically after a certain number of rings without going off-hook, when Hands-free Answerback has been set on the extension. This setting is only effective when ◆ **Forced Automatic Answer** on this screen has been set to **Off**.

Value Range

Disable, Enable

Feature Guide References

2.4.4 Hands-free Answerback

Option 6

◆ Extension Number

Specifies the extension number of the extension.

Value Range

Max. 5 digits (consisting of 0–9)

◆ Extension Name

Specifies the name of the extension.

Value Range

Max. 20 characters

◆ Forced Automatic Answer

Specifies whether the extension automatically answers all incoming calls (both intercom and trunk calls) without going off-hook, regardless of the Hands-free Answerback setting.

Value Range

Off, On

◆ Flexible Button Programming Mode

Specifies whether the extension user can modify all flexible buttons without limitation, or only the One-touch Dialling buttons. When the mode is set to **One-touch Dial**, there is no need to enter "2" before the number when customising a One-touch Dialling button.

Value Range

No Limitation, One-touch Dial

◆ ICM Tone

Selects the ring tone for incoming calls arriving at the INTERCOM button or PDN buttons. Note that the ring tone specified here is applied to all PDN buttons on an extension.

Value Range

IP-PT (except KX-NT265/KX-NT321): 1–30
KX-NT265/KX-NT321: 1–8 (Even if ring tone 9–30 is selected, ring tone 1 is heard.)
Other telephones: 1–8 (Even if ring tone 9–30 is selected, ring tone 2 is heard.)

◆ Display Lock/SVM Lock

Locks or unlocks the Incoming Call Log display (i.e., specifies whether other extension users can see the Incoming Call Log information at the extension).

Value Range

Unlock, Lock

Feature Guide References

2.19.2 Incoming Call Log

◆ Paging Deny

Specifies whether paging of the extension from other extensions is enabled.

Value Range

Disable, Enable

Feature Guide References

2.17.1 Paging

Option 7

◆ Extension Number

Specifies the extension number of the extension.

Value Range

Max. 5 digits (consisting of 0–9)

◆ Extension Name

Specifies the name of the extension.

Value Range

Max. 20 characters

◆ Character Input Mode

Selects the character table to be used for entering characters.

Value Range

Table 1: Standard mode
Table 2: Option mode

◆ Flash Mode during CO Conversation

Selects the function of the FLASH/RECALL button during a trunk conversation.

Value Range

EFA, Terminate, Flash Recall

Feature Guide References

2.11.6 Flash/Recall/Terminate
2.11.7 External Feature Access (EFA)

◆ Incoming Call Log Memory

Specifies the number of incoming trunk calls that are retained in the extension's Incoming Call Log memory.

Value Range

0–100

Feature Guide References

2.19.2 Incoming Call Log

◆ Outgoing Call Log Memory

Specifies the number of telephone numbers dialled by the extension that are retained in the extension's Outgoing Call Log memory.

Value Range

1–100

Feature Guide References

2.6.3 Last Number Redial

◆ ISDN Bearer

Selects the ISDN bearer mode. When **Automatic** is selected, the bearer mode is set automatically depending on the extension's telephone type as follows:
PT: Speech
SLT: Audio

Value Range

Automatic, Speech, Audio

Feature Guide References

4.1.2.1 Integrated Services Digital Network (ISDN)—SUMMARY

Option 8

◆ Extension Number

Specifies the extension number of the extension.

Value Range

Max. 5 digits (consisting of 0–9)

◆ Extension Name

Specifies the name of the extension.

Value Range

Max. 20 characters

◆ Group CW w/o Tone (Ring after Call)

Enables an incoming call to an incoming call distribution group to arrive at a previously busy extension at the moment that the extension goes on-hook for the previous call.

Value Range

Disable, Enable

◆ Extension Caller ID Sending

Enables the extension to send Caller ID information to an SLT.

Value Range

Disable, Enable

Feature Guide References

2.19.1 Caller ID

◆ Incoming Call Wait Timer for Extension Caller ID

Specifies the length of time that the ringing for a call is delayed when the call follows immediately after the previous unanswered call. When receiving two calls in quick succession (e.g., when a call waiting in a queue is directed to an extension immediately after the previous unanswered call stops ringing), some SLTs require a pause, after the first call stops ringing, to receive the second call's Caller ID information.

Value Range

0–15 s

Feature Guide References

2.19.1 Caller ID

◆ SLT MW Mode

Enables the use of the Message Waiting Lamp on an SLT extension connected to the extension port.

Value Range

Disable, MW-Lamp

Feature Guide References

2.20.1 Message Waiting

◆ Wrap-up Timer

Specifies the length of time that must pass after completing a call before an extension will accept another call when logged in as a member of an Incoming Call Distribution Group.
This timer is used when "◆ **Options—Wrap-up Timer based on**" is set to "**Extension**" in **11.5.3 PBX Configuration—[3-5-3] Group—Incoming Call Distribution Group—Miscellaneous**.

Value Range

0–3000 s

PC Programming Manual References

11.5.1.1 PBX Configuration—[3-5-1] Group—Incoming Call Distribution Group—Group Settings—Member List—◆ Wrap-up Timer
11.5.3 PBX Configuration—[3-5-3] Group—Incoming Call Distribution Group—Miscellaneous—◆ Options—Wrap-up Timer based on

Feature Guide References

2.2.2.7 Log-in/Log-out

Option 9

◆ Extension Number

Specifies the extension number of the extension.

Value Range

Max. 5 digits (consisting of 0–9)

◆ Extension Name

Specifies the name of the extension.

Value Range

Max. 20 characters

◆ PDN Delayed Ringing

Specifies the delayed ringing setting for calls to a PDN extension (an extension with one or more PDN buttons).

Value Range

Immediate, 1 Ring, 2 Rings, 3 Rings, 4 Rings, 5 Rings, 6 Rings

Feature Guide References

2.9.1 Primary Directory Number (PDN)/Secondary Directory Number (SDN) Extension

◆ Built-in Communication Assistant

Specifies whether to enable or disable the Communication Assistant (CA) application for each extension.

Value Range

Disable, Basic Only, Enable

PC Programming Manual References

9.2.2 PBX Configuration—[1-1] Configuration—Slot—System Property—Site—Port Number—◆ Built-in Communication Assistant Server

◆ Mobile Extension

Specifies whether to enable or disable mobile extension features (with a cellular phone or other outside destination) for the extension.

Value Range

Disable, Enable

Feature Guide References

2.27.1 Cellular Phone Features—SUMMARY

FWD / DND

Call Forwarding (FWD) and Do Not Disturb (DND) settings for each extension can be referred. FWD and DND settings can be programmed separately for each extension in **12.1.2 PBX Configuration—[4-1-2] Extension—Wired Extension—FWD/DND**.

◆ Extension Number

Specifies the extension number of the extension.

Value Range

Max. 5 digits (consisting of 0–9)

◆ Extension Name

Specifies the name of the extension.

Value Range

Max. 20 characters

◆ FWD Mode for Call from CO

Indicates the forwarding type of incoming trunk calls (reference only).

Value Range

None, FWD All, FWD Busy, FWD N/A, FWD Busy N/A

PC Programming Manual References

12.1.2 PBX Configuration—[4-1-2] Extension—Wired Extension—FWD/DND

Feature Guide References

2.3.2 Call Forwarding (FWD)

◆ FWD Destination for Call from CO

Indicates the forwarding destination of incoming trunk calls (reference only).

Value Range

Max. 32 digits (consisting of 0–9, *, #, [ ] [Secret], and P [Pause])

PC Programming Manual References

12.1.2 PBX Configuration—[4-1-2] Extension—Wired Extension—FWD/DND

Feature Guide References

2.3.2 Call Forwarding (FWD)

◆ FWD Mode for Call from Extension

Indicates the forwarding type of incoming intercom calls (reference only).

Value Range

None, FWD All, FWD Busy, FWD N/A, FWD Busy N/A

PC Programming Manual References

12.1.2 PBX Configuration—[4-1-2] Extension—Wired Extension—FWD/DND

Feature Guide References

2.3.2 Call Forwarding (FWD)

◆ FWD Destination for Call from Extension

Indicates the forwarding destination of incoming intercom calls (reference only).

Value Range

Max. 32 digits (consisting of 0–9, *, #, [ ] [Secret], and P [Pause])

PC Programming Manual References

12.1.2 PBX Configuration—[4-1-2] Extension—Wired Extension—FWD/DND

Feature Guide References

2.3.2 Call Forwarding (FWD)

◆ FWD No Answer Time

Specifies the length of time that an incoming call rings at the extension before the call is forwarded.

Value Range

0–120 s

PC Programming Manual References

12.1.2 PBX Configuration—[4-1-2] Extension—Wired Extension—FWD/DND

Feature Guide References

2.3.2 Call Forwarding (FWD)

◆ Keep ring after FWD NA to CO

Specifies whether an extension continues to ring after forwarding an incoming call to an outside destination via FWD N/A or FWD Busy N/A.

Value Range

Disable, Enable

PC Programming Manual References

12.1.2 PBX Configuration—[4-1-2] Extension—Wired Extension—FWD/DND

Feature Guide References

2.3.2 Call Forwarding (FWD)

12.1.1.1 PBX Configuration—[4-1-1] Extension—Wired Extension—Extension Settings—CLIP Generate

CLIP Generate allows the CLIP numbers for a set of locations in series to be programmed together.
Pre-assigned CLIP numbers for those locations will be overwritten.
If a number generated here is longer than 16 digits, the additional digits will be discarded.

◆ Location Entry—Beginning Entry Location (Ext. Number)

Specifies the extension number of the first location to be programmed.

Value Range

Wired extension number

PC Programming Manual References

12.1.1 PBX Configuration—[4-1-1] Extension—Wired Extension—Extension Settings

Feature Guide References

4.1.2.2 Calling/Connected Line Identification Presentation (CLIP/COLP)

◆ Location Entry—Number to Generate

Specifies the number of locations to be programmed.
A CLIP number will only be assigned to connected wired extensions, even if the number entered here is larger than the total number of wired extensions.

Value Range

1–total number of connected wired extensions

PC Programming Manual References

12.1.1 PBX Configuration—[4-1-1] Extension—Wired Extension—Extension Settings

Feature Guide References

4.1.2.2 Calling/Connected Line Identification Presentation (CLIP/COLP)

◆ Parameter—Deleting Digits

Specifies the number of digits to be deleted from the start of an extension number when using it as part of the CLIP number.

Value Range

0–5

PC Programming Manual References

12.1.1 PBX Configuration—[4-1-1] Extension—Wired Extension—Extension Settings

Feature Guide References

4.1.2.2 Calling/Connected Line Identification Presentation (CLIP/COLP)

◆ Parameter—Head of ID

Specifies a prefix number to be applied to all generated CLIP numbers.

Value Range

Max. 16 digits (consisting of 0–9, *, and #)

PC Programming Manual References

12.1.1 PBX Configuration—[4-1-1] Extension—Wired Extension—Extension Settings

Feature Guide References

4.1.2.2 Calling/Connected Line Identification Presentation (CLIP/COLP)

◆ Parameter—Tail of ID

Specifies a suffix number to be applied to all generated CLIP numbers.

Value Range

Max. 16 digits (consisting of 0–9, *, and #)

PC Programming Manual References

12.1.1 PBX Configuration—[4-1-1] Extension—Wired Extension—Extension Settings

Feature Guide References

4.1.2.2 Calling/Connected Line Identification Presentation (CLIP/COLP)

12.1.2 PBX Configuration—[4-1-2] Extension—Wired Extension—FWD/DND

For each extension, separate Call Forwarding (FWD) and Do Not Disturb (DND) settings can be programmed for incoming intercom and trunk calls. Select the desired extension from the **Extension Number / Name** list. To copy the FWD/DND settings of an extension to another extension, click **Copy to**.

◆ Forward / DND—For external calls

Specifies the FWD/DND setting for external calls.
If **Always (All)**, **Busy**, **No Answer**, or **Busy / No Answer** is selected, the FWD destination field can be set.

Value Range

Always (All), Busy, No Answer, Busy / No Answer, Do Not Disturb, Off

Feature Guide References

2.3.1 Call Forwarding (FWD)/Do Not Disturb (DND)—SUMMARY

◆ Forward / DND—For internal calls

Specifies the FWD/DND setting for internal calls.
If **Always (All)**, **Busy**, **No Answer**, or **Busy / No Answer** is selected, the FWD destination field can be set.
If **For both external calls and internal calls** is checked, this setting becomes unavailable, and the value set for external calls is applied to internal calls.

Value Range

Always (All), Busy, No Answer, Busy / No Answer, Do Not Disturb, Off

Feature Guide References

2.3.1 Call Forwarding (FWD)/Do Not Disturb (DND)—SUMMARY

12.1.3 PBX Configuration—[4-1-3] Extension—Wired Extension—Speed Dial

Personal Speed Dialling allows extension users to dial frequently dialled numbers using two-digit speed dialling numbers (00–99). A maximum of 100 Personal Speed Dialling numbers can be programmed for each extension. Select the desired extension from the **Extension Number / Name** list.

◆ Speed Dialling - Personal Name

Specifies the name of the Personal Speed Dialling number to call using the Personal Speed Dialling Directory shown on the extension's display.

Value Range

Max. 20 characters

Feature Guide References

2.6.4 Speed Dialling—Personal/System

◆ Speed Dialling - Personal Number

Specifies the number to be dialled by the Personal Speed Dialling number.

Value Range

Max. 32 digits (consisting of 0–9, *, #, T [Transfer], [ ] [Secret], P [Pause], and F [Flash])

Feature Guide References

2.6.4 Speed Dialling—Personal/System

12.1.4 PBX Configuration—[4-1-4] Extension—Wired Extension—Flexible Button

Overview

Each flexible button can be customised to allow one-touch access to a certain feature. A maximum of 84 flexible buttons can be customised for each extension. Select the desired extension from the **Extension Number / Name** list.

Copying Flexible Button Settings

To copy the flexible button settings of an extension to another extension, click **Copy to**. This operation (Copy to) is available at the User (Administrator) level.

For more information on flexible buttons, see "2.21.2 Flexible Buttons" in the Feature Guide.
Once flexible buttons have been programmed, the Terminal Label Print utility can be used to print label sheets, which can be attached to extension telephones for quick reference. For details, see **1.2.2.1 Editing and Printing Terminal Labels in Off-line Mode**.

◆ Type

Specifies the feature to be assigned to the flexible button.

Value Range

Not Stored, Loop CO, Single CO, Group CO, DSS, One-touch, ICD Group, Message Waiting, FWD/DND (Both), FWD/DND (External), FWD/DND (Internal), Group Fwd (Both), Group Fwd (External), Group Fwd (Internal), Account, Conference, Terminate, EFA, Charge, Call Park, Call Log, Log-in/Log-out, Hurry-up, Wrap-up, System Alarm, Time Service, Answer, Release, TRS Level Change, ISDN Service, CLIR, COLR, ISDN Hold, Headset, Time Service - Automatic/Manual, Check In, Check Out, Cleaned Up, Two-way Record, Two-way Transfer, LCS, Voice Mail Transfer, NDSS, CTI, PDN, SDN, DN

PC Programming Manual References

12.1.4.1 PBX Configuration—[4-1-4] Extension—Wired Extension—Flexible Button—Flexible button data copy

◆ Parameter Selection (for Single CO)

Specifies the trunk to be accessed.

Value Range

1–142

Feature Guide References

2.5.5.3 Trunk Access

◆ Parameter Selection (for Group CO)

Specifies the trunk group to be accessed.

Value Range

1–64

Feature Guide References

2.5.5.3 Trunk Access

◆ Parameter Selection (for Call Park)

Specifies whether a call is parked in an idle parking zone automatically or in a specific parking zone.

Value Range

Automatic, Specific

Feature Guide References

2.13.2 Call Park

◆ Parameter Selection (for Log-in/Log-out)

Specifies which incoming call distribution groups that the extension belongs to are logged in to or logged out from.

Value Range

None: The incoming call distribution group is selected manually.
All: All incoming call distribution groups that the extension belongs to.
Incoming Group: A pre-specified incoming call distribution group

Feature Guide References

2.2.2.7 Log-in/Log-out

◆ Parameter Selection (for Time Service)

Selects which time modes are switched manually.

Value Range

All (Day/Night/Lunch/Break), Day/Night/Break, Day/Night/Lunch, Day/Night

Feature Guide References

5.1.4 Time Service

◆ Parameter Selection (for TRS Level Change)

Specifies the TRS/Barring level to be used temporarily on a certain extension.

Value Range

Level 1–Level 7

Feature Guide References

2.7.1 Toll Restriction (TRS)/Call Barring (Barring)
2.7.4 Dial Tone Transfer

◆ Parameter Selection (for Time Service - Automatic/Manual)

Specifies the Time Table to be used when the Time Service Switching Mode is set to Automatic.

Value Range

Table 1–Table 8

Feature Guide References

5.1.4 Time Service

◆ Parameter Selection (for SDN)

Specifies the delayed ringing setting for calls arriving at an SDN button.

Value Range

Immediate, 1 Ring, 2 Rings, 3 Rings, 4 Rings, 5 Rings, 6 Rings, No Ring

Feature Guide References

2.9.1 Primary Directory Number (PDN)/Secondary Directory Number (SDN) Extension

◆ Extension Number (for DSS)

Specifies the number of an extension to be accessed.

Value Range

Max. 5 digits (consisting of 0–9)

◆ Extension Number (for ICD Group)

Specifies the floating extension number of an incoming call distribution group to be accessed.

Value Range

Max. 5 digits (consisting of 0–9)

◆ Extension Number (for Message Waiting)

Specifies the number of an extension or floating extension number of an incoming call distribution group for which messages are checked. If this cell is left empty, the extension will check its own messages only.

Value Range

Max. 5 digits (consisting of 0–9)

◆ Extension Number (for Group Fwd (Both))

Specifies the floating extension number of an incoming call distribution group for which both intercom and trunk calls are forwarded.

Value Range

Max. 5 digits (consisting of 0–9)

Feature Guide References

2.3.1 Call Forwarding (FWD)/Do Not Disturb (DND)—SUMMARY

◆ Extension Number (for Group Fwd (External))

Specifies the floating extension number of an incoming call distribution group for which trunk calls are forwarded.

Value Range

Max. 5 digits (consisting of 0–9)

Feature Guide References

2.3.1 Call Forwarding (FWD)/Do Not Disturb (DND)—SUMMARY

◆ Extension Number (for Group Fwd (Internal))

Specifies the floating extension number of an incoming call distribution group for which intercom calls are forwarded.

Value Range

Max. 5 digits (consisting of 0–9)

Feature Guide References

2.3.1 Call Forwarding (FWD)/Do Not Disturb (DND)—SUMMARY

◆ Extension Number (for Call Log)

Specifies the extension's own number or the floating extension number of an incoming call distribution group for which call log information is displayed. If the cell is left empty, the extension will display its own call log information.

Value Range

Max. 5 digits (consisting of 0–9)

◆ Extension Number (for Log-in/Log-out)

Specifies the floating extension number of an incoming call distribution group to log-in to or log-out from.

Value Range

Max. 5 digits (consisting of 0–9)

Feature Guide References

2.2.2.7 Log-in/Log-out

◆ Extension Number (for Hurry-up)

Specifies the floating extension number of the incoming call distribution group whose longest waiting call will be redirected (Manual Queue Redirection).

Value Range

Max. 5 digits (consisting of 0–9)

Feature Guide References

2.2.2.4 Queuing Feature

◆ Extension Number (for Two-way Record)

Specifies the floating extension number of the UM/VM (DPT) group containing the extension's mailbox.

Value Range

Max. 5 digits (consisting of 0–9)

Feature Guide References

2.28.3 Voice Mail DPT (Digital) Integration
3.1.1 Unified Messaging System Overview

◆ Extension Number (for Two-way Transfer)

Specifies the floating extension number of the UM/VM (DPT) group containing the desired mailbox.

Value Range

Max. 5 digits (consisting of 0–9)

Feature Guide References

2.28.3 Voice Mail DPT (Digital) Integration
3.1.1 Unified Messaging System Overview

◆ Extension Number (for Voice Mail Transfer)

Specifies the floating extension number of the UM/VM (DTMF/DPT) group containing the desired mailbox.

Value Range

Max. 8 digits (consisting of 0–9)

Feature Guide References

2.28.2 Voice Mail DTMF Integration
2.28.3 Voice Mail DPT (Digital) Integration
3.1.1 Unified Messaging System Overview

◆ Extension Number (for SDN)

Specifies the floating extension number of the PDN extension corresponding to this SDN button.
Note that the extension specified here must have a PDN button registered for the SDN button to function.

Value Range

Max. 5 digits (consisting of 0–9)

Feature Guide References

2.9.1 Primary Directory Number (PDN)/Secondary Directory Number (SDN) Extension

◆ Extension Name

Indicates the name of the extension, when an extension number is specified (reference only).

Value Range

Max. 20 characters

◆ Dial (for One-touch)

Specifies the number to be dialled. The PBX can have a maximum of 2000 One-touch Dialling buttons for extensions.

Value Range

Max. 32 digits (consisting of 0–9, *, #, T [Transfer], [ ] [Secret], P [Pause], and F [Flash])

Feature Guide References

2.6.2 One-touch Dialling

◆ Dial (for ISDN Service)

Specifies the number required to access the telephone company's ISDN service.

Value Range

Max. 32 digits (consisting of 0–9, *, #, T [Transfer], [ ] [Secret], P [Pause], and F [Flash])

Feature Guide References

4.1.2.10 ISDN Service Access by Keypad Protocol

◆ Dial (for NDSS)

Specifies the network extension number of the extension to be accessed using Network Direct Station Selection.
Note that only extension numbers that have been previously registered in **17.4 PBX Configuration—[9-4] Private Network—NDSS Key Table** can be specified here.

Value Range

Max. 16 digits (consisting of 0–9)

Feature Guide References

4.2.5.1 Network Direct Station Selection (NDSS)

◆ Label Name

Specifies the name of each flexible button for KX-NT366 IP-PTs. The name specified here is displayed on the LCD for each button.

Value Range

Max. 12 characters

Feature Guide References

2.21.2 Flexible Buttons

◆ Optional Parameter (Ringing Tone Type Number) (for Time Service)

Specifies the Time Table to be used for changing time modes in the Automatic Switching mode.

Value Range

Table 1–Table 8

Feature Guide References

5.1.4 Time Service

◆ Optional Parameter (Ringing Tone Type Number) (for Loop CO, Single CO, Group CO, ICD Group, SDN)

Specifies the ring tone type.

Value Range

IP-PT (except KX-NT265/KX-NT321): 1–30
KX-NT265/KX-NT321: 1–8 (Even if ring tone 9–30 is selected, ring tone 1 is heard.)
S-PS: Not available.
Other telephones: 1–8 (Even if ring tone 9–30 is selected, ring tone 2 is heard.)

◆ Optional Parameter (Ringing Tone Type Number) (for Call Park)

Specifies the number of the parking zone a call is to be parked in when a Call Park button with ◆ **Parameter Selection (for Call Park)** on this screen set to **Specific** is pressed.

Value Range

Park 00–Park 99

Feature Guide References

2.13.2 Call Park

◆ Ext No. of Mailbox (for Two-way Transfer)

Specifies the number of the extension whose mailbox will be used to record conversations using One-touch Two-way Transfer. (For example, a secretary can record a conversation into the mailbox of a boss.) If the cell is left empty, the extension user must specify the number of an extension each time.

Value Range

Max. 5 digits (consisting of 0–9)

Feature Guide References

2.28.3 Voice Mail DPT (Digital) Integration
3.1.1 Unified Messaging System Overview

12.1.4.1 PBX Configuration—[4-1-4] Extension—Wired Extension—Flexible Button—Flexible button data copy

The flexible button settings (including key label settings) of an extension can be copied to different extensions.

◆ Destination Extension Line

Select the number and name of the extension that will receive the copied settings. Multiple extensions can be selected. To select all extensions at once, click **Select All**.
When selecting multiple extensions, note that if the source extension has an SDN button, the copy operation cannot be performed.

PC Programming Manual References

12.1.4 PBX Configuration—[4-1-4] Extension—Wired Extension—Flexible Button

12.1.5 PBX Configuration—[4-1-5] Extension—Wired Extension—PF Button

Each Programmable Feature (PF) button can be customised to access a certain feature with one touch. A maximum of 12 PF buttons can be customised for each extension. Select the desired extension from the **Extension Number / Name** list.

◆ Type

Specifies whether to store a dialling number for the one-touch access.

Value Range

Not Stored, One Touch

Feature Guide References

2.21.2 Flexible Buttons

◆ Dial

Specifies the number to be dialled.

Value Range

Max. 32 digits (consisting of 0–9, *, #, T [Transfer], [ ] [Secret], P [Pause], and F [Flash])

Feature Guide References

2.21.2 Flexible Buttons

12.1.6 PBX Configuration—[4-1-6] Extension—Wired Extension—NDSS Link Data - Send

It is possible to cancel the transmission of an extension's status data over the network. Select the desired extension from the **Extension Number / Name** list.
This screen can be accessed only in On-line mode.

◆ Network BLF Data to NDSS Key of Other PBX - Other PBX (Network PBX ID=1)

Selects whether extension status data is transmitted over the network for the selected extension. This setting is automatically set to **ON** when the feature is used, and can only be manually changed from **ON** to **OFF**, to cancel data transmission.

Value Range

OFF, ON

PC Programming Manual References

17.1 PBX Configuration—[9-1] Private Network—TIE Table

Feature Guide References

4.2.5.1 Network Direct Station Selection (NDSS)

12.1.7 PBX Configuration—[4-1-7] Extension—Wired Extension—CLIP ID Table

Up to 8 CLIP IDs can be set for each wired extension.

◆ Extension Number

Indicates the extension number of the extension (reference only).

Value Range

Max. 5 digits (consisting of 0–9)

◆ Extension Name

Indicates the name of the extension (reference only).

Value Range

Max. 20 characters

◆ CLIP 1–8

Specifies up to 8 CLIP IDs for the extension.

Value Range

Max. 16 digits (consisting of 0–9, *, and #)

12.1.8 PBX Configuration-[4-1-8] Extension-Wired Extension-Simplified Voice Message

The built-in Simplified Voice Message feature can be provided for each extension. This screen allows you to specify which extension uses this feature, and the maximum number of messages that can be stored for each extension.
For more information on Simplified Voice Message, see 2.16.3 Built-in Simplified Voice Message (SVM) in the Feature Guide.

◆ Shelf

Indicates the shelf position (reference only).

Value Range

1-4

◆ Slot

Indicates the slot position (reference only).

Value Range

Slot number

◆ Port

Indicates the port number (reference only).

Value Range

Port number

◆ Extension number

Indicates the extension number (reference only).

Value Range

Max. 5 digits (consisting of 0–9)

PC Programming Manual References

9.34 PBX Configuration—[1-2] Configuration—Portable Station

◆ Extension Name

Indicates the name of the extension (reference only).

Value Range

Max. 20 characters

PC Programming Manual References

12.1.1 PBX Configuration—[4-1-1] Extension—Wired Extension—Extension Settings—Main—◆ Extension Name

◆ Simplified Voice Message

Specifies whether to enable the Simplified Voice Message feature.

Value Range

Enable, Disable

◆ Maximum SVM Log

Specifies the maximum number of voice messages (not including greeting messages) that can be stored for the extension.

Value Range

1-100

12.2 PBX Configuration—[4-2] Extension—Portable Station

12.2.1 PBX Configuration—[4-2-1] Extension—Portable Station—Extension Settings

For each Portable Station (PS), various extension settings can be assigned. A maximum of 128 PSs can be programmed.
To copy the settings of an extension to another extension, click **Copy to**. The copied data includes FWD/DND and flexible button settings.
To assign a set of CLIP numbers automatically, click **CLIP Generate**. To assign names and tenants to extension user groups, click **Extension User Group Table**. See **11.2 PBX Configuration—[3-2] Group—User Group** for more details.

Main

◆ Extension Number

Indicates the extension number of the PS (reference only).

Value Range

Max. 5 digits (consisting of 0–9)

PC Programming Manual References

9.34 PBX Configuration—[1-2] Configuration—Portable Station—◆ Extension No.

◆ Extension Name

Specifies the name of the PS.

Value Range

Max. 20 characters

PC Programming Manual References

9.34 PBX Configuration—[1-2] Configuration—Portable Station—◆ Extension Name

◆ Property

Indicates the property (reference only).

Value Range

Portable Station

◆ User Group

Specifies the extension user group to which the PS belongs. The extension user group is used to compose tenants, call pickup groups and paging groups.

Value Range

1–32

Feature Guide References

5.1.2 Group
5.1.3 Tenant Service

◆ COS

Specifies the COS of the PS.

Value Range

1–64

PC Programming Manual References

10.7.1 PBX Configuration—[2-7-1] System—Class of Service—COS Settings

Feature Guide References

5.1.1 Class of Service (COS)

◆ Extension PIN

Specifies the PIN of the PS.

CAUTION

There is a risk that fraudulent telephone calls will be made if a third party discovers a personal identification number (PIN) (verification code PIN or extension PIN) of the PBX.
The cost of such calls will be billed to the owner/renter of the PBX.
To protect the PBX from this kind of fraudulent use, we strongly recommend:

a. Keeping PINs secret.
b. Selecting complex, random PINs that cannot be easily guessed.
c. Changing PINs frequently.

To change an extension PIN:

1. Click **Edit** under **Extension PIN** for the extension to change.
2. In the window that appears, enter the new extension PIN and then enter it again to confirm it.
3. Click **OK**.

Value Range

Max. 10 digits (consisting of 0–9)

Feature Guide References

2.24.1 Extension Personal Identification Number (PIN)

Intercept Destination

◆ Extension Number

Indicates the extension number of the PS (reference only).

Value Range

Max. 5 digits (consisting of 0–9)

PC Programming Manual References

9.34 PBX Configuration—[1-2] Configuration—Portable Station—◆ Extension No.

◆ Extension Name

Specifies the name of the PS.

Value Range

Max. 20 characters

PC Programming Manual References

9.34 PBX Configuration—[1-2] Configuration—Portable Station—◆ Extension Name

◆ Intercept Destination—When called party does not answer—Day, Lunch, Break, Night

Specifies the Intercept Routing destination of calls in each time mode for Intercept Routing–No Answer and Intercept Routing–DND.
Note that Intercept Routing–Busy calls are routed using ◆ **Intercept Destination—When Called Party is Busy** below.

Value Range

Max. 32 digits (consisting of 0–9, *, #, [ ] [Secret], and P [Pause])

PC Programming Manual References

12.2.1 PBX Configuration—[4-2-1] Extension—Portable Station—Extension Settings—Intercept Destination—◆ Intercept Destination—When Called Party is Busy

Feature Guide References

2.1.1.5 Intercept Routing

◆ Intercept Destination—When Called Party is Busy

Specifies the Intercept Routing destination of calls when the extension is busy.

Value Range

Max. 32 digits (consisting of 0–9, *, #, [ ] [Secret], and P [Pause])

Feature Guide References

2.1.1.5 Intercept Routing

Intercept No Answer Time

◆ Extension Number

Indicates the extension number of the PS (reference only).

Value Range

Max. 5 digits (consisting of 0–9)

PC Programming Manual References

9.34 PBX Configuration—[1-2] Configuration—Portable Station—◆ Extension No.

◆ Extension Name

Specifies the name of the PS.

Value Range

Max. 20 characters

PC Programming Manual References

9.34 PBX Configuration—[1-2] Configuration—Portable Station—◆ Extension Name

◆ Intercept No Answer Time—Day, Lunch, Break, Night

Specifies the length of time until an unanswered call is redirected to the intercept routing destination in each time mode.
When this setting is set to "0", the system timer is used.

Value Range

0–240 s

PC Programming Manual References

10.3 PBX Configuration—[2-3] System—Timers & Counters—Dial / IRNA / Recall / Tone—◆ Intercept Routing No Answer (IRNA)—Day (s), Lunch (s), Break (s), Night (s)

Feature Guide References

2.1.1.5 Intercept Routing

CLIP

◆ Extension Number

Indicates the extension number of the PS (reference only).

Value Range

Max. 5 digits (consisting of 0–9)

PC Programming Manual References

9.34 PBX Configuration—[1-2] Configuration—Portable Station—◆ Extension No.

◆ Extension Name

Specifies the name of the PS.

Value Range

Max. 20 characters

PC Programming Manual References

9.34 PBX Configuration—[1-2] Configuration—Portable Station—◆ Extension Name

◆ CLIP ID

Specifies the CLIP number sent to the public network to show on the called party's telephone display when making a trunk call.

Value Range

Max. 16 digits (consisting of 0–9, *, and #)

Feature Guide References

4.1.2.2 Calling/Connected Line Identification Presentation (CLIP/COLP)

◆ CLIP on Extension/CO

Selects the CLIP number to show on the called party's telephone.

Value Range

Extension: Show the CLIP number specified in ◆ **CLIP ID**.
CO: Show the CLIP number specified in ◆ **Subscriber Number** in **9.26 PBX Configuration—[1-1] Configuration—Slot—Port Property - PRI Port**.

PC Programming Manual References

9.26 PBX Configuration—[1-1] Configuration—Slot—Port Property - PRI Port—CO Setting—◆ Subscriber Number
12.2.1 PBX Configuration—[4-2-1] Extension—Portable Station—Extension Settings—CLIP—◆ CLIP ID

Feature Guide References

4.1.2.2 Calling/Connected Line Identification Presentation (CLIP/COLP)

◆ CLIR

Specifies whether to restrict the display of the CLIP number on the called party's telephone when making a public network trunk call.

Value Range

Disable, Enable

Feature Guide References

4.1.2.2 Calling/Connected Line Identification Presentation (CLIP/COLP)

◆ COLR

Specifies whether to restrict the display of the CLIP number of the PS on the caller's telephone display when answering a call.

Value Range

Disable, Enable

Feature Guide References

4.1.2.2 Calling/Connected Line Identification Presentation (CLIP/COLP)

UM

◆ Extension Number

Specifies the extension number of the PS (reference only).

Value Range

Max. 5 digits (consisting of 0–9)

◆ Extension Name

Specifies the name of the PS.

Value Range

Max. 20 characters

◆ Two-way Recording

Specifies whether to enable the two-way recording feature for the PS using the Unified Messaging system.

Value Range

Enable, Disable

Feature Guide References

3.2.2.30 Two-way Record/Two-way Transfer

Option 1

◆ Extension Number

Indicates the extension number of the PS (reference only).

Value Range

Max. 5 digits (consisting of 0–9)

PC Programming Manual References

9.34 PBX Configuration—[1-2] Configuration—Portable Station—◆ Extension No.

◆ Extension Name

Specifies the name of the PS.

Value Range

Max. 20 characters

PC Programming Manual References

9.34 PBX Configuration—[1-2] Configuration—Portable Station—◆ Extension Name

◆ Ring Pattern Table

Specifies the Ring Tone Pattern Table to be used by the PS.

Value Range

1–8

PC Programming Manual References

10.8.1 PBX Configuration—[2-8-1] System—Ring Tone Patterns—Call from CO
10.8.2 PBX Configuration—[2-8-2] System—Ring Tone Patterns—Call from DOORPHONE
10.8.3 PBX Configuration—[2-8-3] System—Ring Tone Patterns—Call from Others

Feature Guide References

2.1.3.2 Ring Tone Pattern Selection

◆ Programmed Mailbox No.

Specifies the mailbox number of the incoming call distribution group's mailbox for Voice Processing Systems (VPS) with DTMF Integration.

Value Range

Max. 16 digits (consisting of 0–9, *, and #)

◆ Transfer Recall Destination

Specifies the transfer recall destination when an extension user transfers a call with the Call Transfer without Announcement feature and the transferred call is not answered within a certain time period.

Value Range

Max. 5 digits (consisting of 0–9)

Feature Guide References

2.12.1 Call Transfer

◆ ARS Itemised Code

Specifies the itemised billing code used by the ARS feature for identifying the calls made from the PS for accounting and billing purposes.

Value Range

Max. 10 digits (consisting of 0–9, *, and #)

PC Programming Manual References

16.5 PBX Configuration—[8-5] ARS—Carrier

Feature Guide References

2.7.6 Verification Code Entry
2.8.1 Automatic Route Selection (ARS)

Option 2

◆ Extension Number

Indicates the extension number of the PS (reference only).

Value Range

Max. 5 digits (consisting of 0–9)

PC Programming Manual References

9.34 PBX Configuration—[1-2] Configuration—Portable Station—◆ Extension No.

◆ Extension Name

Specifies the name of the PS.

Value Range

Max. 20 characters

PC Programming Manual References

9.34 PBX Configuration—[1-2] Configuration—Portable Station—◆ Extension Name

◆ Manual C. Waiting for Extension Call

Selects the method of receiving call waiting notification from other extensions.

Value Range

Off: No notification
BSS: Tone from the handset or built-in speaker
OHCA: If selected, a BSS notification will be received.
W-OHCA: If selected, a BSS notification will be received.

Feature Guide References

2.1.3.3 Call Waiting

◆ Automatic C. Waiting

Specifies whether to receive call waiting notification for a call from trunk, a doorphone call or a call via an incoming call distribution group.

Value Range

Off, On

Feature Guide References

2.1.3.3 Call Waiting

◆ Pickup Dial Set

Sets or cancels the Hot Line feature. The number specified in ◆ **Pickup Dial No.** on this screen is dialled automatically after going off-hook when the Hot Line feature is active.

Value Range

Off, On

PC Programming Manual References

10.3 PBX Configuration—[2-3] System—Timers & Counters—Dial / IRNA / Recall / Tone—◆ Dial—Hot Line (Pickup Dial) Start (s)

Feature Guide References

2.6.6 Hot Line

◆ Pickup Dial No.

Specifies the number to be dialled automatically after going off-hook when the Hot Line feature is active.

Value Range

Max. 32 digits (consisting of 0–9, *, #, T [Transfer], [ ] [Secret], P [Pause], and F [Flash])

Feature Guide References

2.6.6 Hot Line

Option 3

◆ Extension Number

Indicates the extension number of the PS (reference only).

Value Range

Max. 5 digits (consisting of 0–9)

PC Programming Manual References

9.34 PBX Configuration—[1-2] Configuration—Portable Station—◆ Extension No.

◆ Extension Name

Specifies the name of the PS.

Value Range

Max. 20 characters

PC Programming Manual References

9.34 PBX Configuration—[1-2] Configuration—Portable Station—◆ Extension Name

◆ Call Pickup Deny

Specifies whether calls can be picked up by other extensions.

Value Range

Disable: Allows other extension users to pick up calls to your PS
Enable: Prevents other extension users from picking up calls to your PS

Feature Guide References

2.4.3 Call Pickup

◆ Executive Override Deny

Specifies whether calls can be interrupted by other extensions.

Value Range

Disable: Allows other extension users to interrupt an existing call
Enable: Prevents other extension users from interrupting an existing call

Feature Guide References

2.10.2 Executive Busy Override

◆ Absent Message

Specifies the Personal Absent Message which, unlike the System Absent Message, can be customised for each PS.

Value Range

Max. 16 characters

Feature Guide References

2.20.2 Absent Message

◆ Charge Limit

Specifies the maximum limit of call charges allowed for the PS. When this limit is reached, the PS cannot be used to make further trunk calls.
The number of decimal places that can be specified here depends on the value set in ◆ **Charge Options—Digits After Decimal Point** in **14.2 PBX Configuration—[6-2] Feature—Hotel & Charge**.

Value Range

0–9999999

PC Programming Manual References

14.2 PBX Configuration—[6-2] Feature—Hotel & Charge

Feature Guide References

2.7.2 Budget Management

Option 4

◆ Extension Number

Indicates the extension number of the PS (reference only).

Value Range

Max. 5 digits (consisting of 0–9)

PC Programming Manual References

9.34 PBX Configuration—[1-2] Configuration—Portable Station—◆ Extension No.

◆ Extension Name

Specifies the name of the PS.

Value Range

Max. 20 characters

PC Programming Manual References

9.34 PBX Configuration—[1-2] Configuration—Portable Station—◆ Extension Name

◆ Outgoing Preferred Line

Selects the line to be seized after going off-hook to make a call.

Value Range

No Line: No line is seized.
Idle: An idle trunk is seized automatically from the programmed trunk groups.
ICM/PDN: An extension line is seized, or, for a PDN extension, an idle PDN button is selected.
F-1–F-12: A trunk programmed for a flexible button (F-1–F-12) is seized. A flexible button customised as a Single-CO, Group-CO, Loop-CO, or ICD Group button must be selected.

PC Programming Manual References

12.2.3 PBX Configuration—[4-2-3] Extension—Portable Station—Flexible Button

Feature Guide References

2.5.5.2 Line Preference—Outgoing

◆ Incoming Preferred Line

Selects the line on which an incoming call is answered after going off-hook.
Note that even if a specific PDN button is selected here, a call ringing at any PDN button on the extension will be answered when going off-hook.

Value Range

No Line: No line is selected. Select a line by pressing the desired Line Access button to answer a call.
Ringing Line: The longest ringing call is selected.
PDN: The call arriving at any PDN button is selected.
F-1–F-12: The call arriving at a flexible button (F-1–F-12) is selected. A flexible button customised as a Single-CO, Group-CO, Loop-CO, or ICD Group button must be selected.

PC Programming Manual References

12.2.3 PBX Configuration—[4-2-3] Extension—Portable Station—Flexible Button

Feature Guide References

2.4.2 Line Preference—Incoming

◆ Call Waiting Tone Type

Selects the type of Call Waiting tone sent to the busy extension.

Value Range

CW Tone 1, CW Tone 2

Feature Guide References

2.10.4.2 Call Waiting Tone

◆ LCS Recording Mode

Specifies whether to continue or stop recording the message in the PS's mailbox when the PS user answers a call that was being monitored.

Value Range

Stop Record, Keep Record

Feature Guide References

3.1.1 Unified Messaging System Overview

Option 5

◆ Extension Number

Indicates the extension number of the PS (reference only).

Value Range

Max. 5 digits (consisting of 0–9)

PC Programming Manual References

9.34 PBX Configuration—[1-2] Configuration—Portable Station—◆ Extension No.

◆ Extension Name

Specifies the name of the PS.

Value Range

Max. 20 characters

PC Programming Manual References

9.34 PBX Configuration—[1-2] Configuration—Portable Station—◆ Extension Name

◆ Display Language

Selects the display language of the PS.

Value Range

Language1–Language5

Feature Guide References

2.21.4 Display Information

◆ Incoming Call Display

Selects which caller information is shown on the first line of the PS's display.

Value Range

Caller ID Name, CO Line Name, DDI/DID Name

Feature Guide References

2.21.4 Display Information

◆ Automatic LCD Switch when Start Talking

Enables the first line of the display to show the call duration automatically after answering a trunk call.

Value Range

Disable, Enable

Feature Guide References

2.21.4 Display Information

Option 6

◆ Extension Number

Indicates the extension number of the PS (reference only).

Value Range

Max. 5 digits (consisting of 0–9)

PC Programming Manual References

9.34 PBX Configuration—[1-2] Configuration—Portable Station—◆ Extension No.

◆ Extension Name

Specifies the name of the PS.

Value Range

Max. 20 characters

PC Programming Manual References

9.34 PBX Configuration—[1-2] Configuration—Portable Station—◆ Extension Name

◆ Flexible Button Programming Mode

Specifies whether the PS user can modify all flexible buttons without limitation, or only the One-touch Dialling buttons. When the mode is set to **One-touch Dial**, there is no need to enter "2" before the number when customising a One-touch Dialling button.

Value Range

No Limitation, One-touch Dial

Feature Guide References

2.6.2 One-touch Dialling

◆ SVM Lock

Selects whether Simplified Voice Message Log information can be displayed at the extension or other extensions.

Value Range

Unlock, Lock

Feature Guide References

2.19.2 Incoming Call Log

Option 7

◆ Extension Number

Indicates the extension number of the PS (reference only).

Value Range

Max. 5 digits (consisting of 0–9)

PC Programming Manual References

9.34 PBX Configuration—[1-2] Configuration—Portable Station—◆ Extension No.

◆ Extension Name

Specifies the name of the PS.

Value Range

Max. 20 characters

PC Programming Manual References

9.34 PBX Configuration—[1-2] Configuration—Portable Station—◆ Extension Name

◆ Character Input Mode

Selects the character table to be used for entering characters.

Value Range

Table 1: Standard mode
Table 2: Option mode

◆ Flash Mode during CO Conversation

Selects the function of the FLASH/RECALL button during a trunk conversation.

Value Range

EFA, Terminate, Flash Recall

Feature Guide References

2.11.6 Flash/Recall/Terminate
2.11.7 External Feature Access (EFA)

◆ Incoming Call Log Memory

Specifies the number of incoming trunk calls that are retained in the PS's Incoming Call Log memory.

Value Range

0–100

Feature Guide References

2.19.2 Incoming Call Log

◆ Outgoing Call Log Memory

Specifies the number of telephone numbers dialled by the PS that are retained in the PS's Outgoing Call Log memory.

Value Range

1–100

Feature Guide References

2.6.3 Last Number Redial

◆ ISDN Bearer

Selects the ISDN bearer mode. When **Automatic** is selected, the bearer mode is set automatically depending on the type of the PS.

Value Range

Automatic, Speech, Audio

Feature Guide References

4.1.2.1 Integrated Services Digital Network (ISDN)—SUMMARY

Option 8

◆ Extension Number

Indicates the extension number of the PS (reference only).

Value Range

Max. 5 digits (consisting of 0–9)

PC Programming Manual References

9.34 PBX Configuration—[1-2] Configuration—Portable Station—◆ Extension No.

◆ Extension Name

Specifies the name of the PS.

Value Range

Max. 20 characters

PC Programming Manual References

9.34 PBX Configuration—[1-2] Configuration—Portable Station—◆ Extension Name

◆ Group CW w/o Tone (Ring after Call)

Enables an incoming call to an incoming call distribution group to arrive at a previously busy extension at the moment that the extension goes on-hook for the previous call.

Value Range

Disable, Enable

◆ Wrap-up Timer

Specifies the length of time that must pass after completing a call before a PS will accept another call when logged in as a member of an Incoming Call Distribution Group.
This timer is used when "◆ **Options—Wrap-up Timer based on**" is set to "**Extension**" in **11.5.3 PBX Configuration—[3-5-3] Group—Incoming Call Distribution Group—Miscellaneous**.

Value Range

0–3000 s

PC Programming Manual References

11.5.1.1 PBX Configuration—[3-5-1] Group—Incoming Call Distribution Group—Group Settings—Member List—◆ Wrap-up Timer
11.5.3 PBX Configuration—[3-5-3] Group—Incoming Call Distribution Group—Miscellaneous—◆ Options—Wrap-up Timer based on

Feature Guide References

2.2.2.7 Log-in/Log-out

Option 9

◆ Extension Number

Indicates the extension number of the PS (reference only).

Value Range

Max. 5 digits (consisting of 0–9)

PC Programming Manual References

9.34 PBX Configuration—[1-2] Configuration—Portable Station—◆ Extension No.

◆ Extension Name

Specifies the name of the PS.

Value Range

Max. 20 characters

PC Programming Manual References

9.34 PBX Configuration—[1-2] Configuration—Portable Station—◆ Extension Name

◆ PDN Delayed Ringing

Specifies the delayed ringing setting for calls to a PDN extension (an extension with one or more PDN buttons).

Value Range

Immediate, 1 Ring, 2 Rings, 3 Rings, 4 Rings, 5 Rings, 6 Rings

Feature Guide References

2.9.1 Primary Directory Number (PDN)/Secondary Directory Number (SDN) Extension

◆ Built-in Communication Assistant

Specifies whether to enable or disable the Communication Assistant (CA) application for each extension.

Value Range

Disable, Basic Only, Enable

PC Programming Manual References

9.2.2 PBX Configuration—[1-1] Configuration—Slot—System Property—Site—Port Number—◆ Built-in Communication Assistant Server

◆ Mobile Extension

Specifies whether to enable or disable mobile extension features (with a cellular phone or other outside destination) for the extension.

Value Range

Disable, Enable

Feature Guide References

2.27.1 Cellular Phone Features—SUMMARY

FWD / DND

Call Forwarding (FWD) and Do Not Disturb (DND) settings for each PS can be referred. FWD and DND settings can be programmed separately for each PS in **12.2.2 PBX Configuration—[4-2-2] Extension—Portable Station—FWD/DND**.

◆ Extension Number

Indicates the extension number of the PS (reference only).

Value Range

Max. 5 digits (consisting of 0–9)

PC Programming Manual References

9.34 PBX Configuration—[1-2] Configuration—Portable Station—◆ Extension No.

◆ Extension Name

Specifies the name of the PS.

Value Range

Max. 20 characters

PC Programming Manual References

9.34 PBX Configuration—[1-2] Configuration—Portable Station—◆ Extension Name

◆ FWD Mode for Call from CO

Indicates the forwarding type of incoming trunk calls (reference only).

Value Range

None, FWD All, FWD Busy, FWD N/A, FWD Busy N/A

PC Programming Manual References

12.2.2 PBX Configuration—[4-2-2] Extension—Portable Station—FWD/DND

Feature Guide References

2.3.2 Call Forwarding (FWD)

◆ FWD Destination for Call from CO

Indicates the forwarding destination of incoming trunk calls (reference only).

Value Range

Max. 32 digits (consisting of 0–9, *, #, [ ] [Secret], and P [Pause])

PC Programming Manual References

12.2.2 PBX Configuration—[4-2-2] Extension—Portable Station—FWD/DND

Feature Guide References

2.3.2 Call Forwarding (FWD)

◆ FWD Mode for Call from Extension

Indicates the forwarding type of incoming intercom calls (reference only).

Value Range

None, FWD All, FWD Busy, FWD N/A, FWD Busy N/A

PC Programming Manual References

12.2.2 PBX Configuration—[4-2-2] Extension—Portable Station—FWD/DND

Feature Guide References

2.3.2 Call Forwarding (FWD)

◆ FWD Destination for Call from Extension

Indicates the forwarding destination of incoming intercom calls (reference only).

Value Range

Max. 32 digits (consisting of 0–9, *, #, [ ] [Secret], and P [Pause])

PC Programming Manual References

12.2.2 PBX Configuration—[4-2-2] Extension—Portable Station—FWD/DND

Feature Guide References

2.3.2 Call Forwarding (FWD)

◆ FWD No Answer Time

Specifies the length of time that an incoming call rings at the PS before the call is forwarded.

Value Range

0–120 s

PC Programming Manual References

12.2.2 PBX Configuration—[4-2-2] Extension—Portable Station—FWD/DND

Feature Guide References

2.3.2 Call Forwarding (FWD)

◆ Keep ring after FWD NA to CO

Specifies whether a PS continues to ring after forwarding an incoming call to an outside destination via FWD N/A or FWD Busy N/A.

Value Range

Disable, Enable

PC Programming Manual References

12.2.2 PBX Configuration—[4-2-2] Extension—Portable Station—FWD/DND

Feature Guide References

2.3.2 Call Forwarding (FWD)

12.2.1.1 PBX Configuration—[4-2-1] Extension—Portable Station—Extension Settings—CLIP Generate

CLIP Generate allows the CLIP numbers for a set of locations in series to be programmed together.
Pre-assigned CLIP numbers for those locations will be overwritten.
If a number generated here is longer than 16 digits, the additional digits will be discarded.

◆ Location Entry—Beginning Entry Location (Ext. Number)

Specifies the extension number of the first location to be programmed.

Value Range

PS extension number

PC Programming Manual References

12.2.1 PBX Configuration—[4-2-1] Extension—Portable Station—Extension Settings

Feature Guide References

4.1.2.2 Calling/Connected Line Identification Presentation (CLIP/COLP)

◆ Location Entry—Number to Generate

Specifies the number of locations to be programmed.
A CLIP number will only be assigned to registered PS extensions, even if the number entered here is larger than the total number of PS extensions.

Value Range

1–total number of connected PS extensions

PC Programming Manual References

12.2.1 PBX Configuration—[4-2-1] Extension—Portable Station—Extension Settings

Feature Guide References

4.1.2.2 Calling/Connected Line Identification Presentation (CLIP/COLP)

◆ Parameter—Deleting Digits

Specifies the number of digits to be deleted from the start of an extension number when using it as part of the CLIP number.

Value Range

0–4

PC Programming Manual References

12.2.1 PBX Configuration—[4-2-1] Extension—Portable Station—Extension Settings

Feature Guide References

4.1.2.2 Calling/Connected Line Identification Presentation (CLIP/COLP)

◆ Parameter—Head of ID

Specifies a prefix number to be applied to all generated CLIP numbers.

Value Range

Max. 16 digits (consisting of 0–9, *, and #)

PC Programming Manual References

12.2.1 PBX Configuration—[4-2-1] Extension—Portable Station—Extension Settings

Feature Guide References

4.1.2.2 Calling/Connected Line Identification Presentation (CLIP/COLP)

◆ Parameter—Tail of ID

Specifies a suffix number to be applied to all generated CLIP numbers.

Value Range

Max. 16 digits (consisting of 0–9, *, and #)

PC Programming Manual References

12.2.1 PBX Configuration—[4-2-1] Extension—Portable Station—Extension Settings

Feature Guide References

4.1.2.2 Calling/Connected Line Identification Presentation (CLIP/COLP)

12.2.2 PBX Configuration—[4-2-2] Extension—Portable Station—FWD/DND

For each PS, separate Call Forwarding (FWD) and Do Not Disturb (DND) settings can be programmed for incoming intercom and trunk calls. Select the desired PS from the **Extension Number / Name** list.
To copy FWD/DND values from one location to another, click **Copy to**.

◆ Forward / DND—For external calls

Specifies the FWD/DND setting for external calls.
If **Always (All)**, **Busy**, **No Answer**, or **Busy / No Answer** is selected, the FWD destination field can be set.

Value Range

Always (All), Busy, No Answer, Busy / No Answer, Do Not Disturb, Off

Feature Guide References

2.3.1 Call Forwarding (FWD)/Do Not Disturb (DND)—SUMMARY

◆ Forward / DND—For internal calls

Specifies the FWD/DND setting for internal calls.
If **Always (All)**, **Busy**, **No Answer**, or **Busy / No Answer** is selected, the FWD destination field can be set.
If **For both external calls and internal calls** is checked, this setting becomes unavailable, and the value set for external calls is applied to internal calls.

Value Range

Always (All), Busy, No Answer, Busy / No Answer, Do Not Disturb, Off

Feature Guide References

2.3.1 Call Forwarding (FWD)/Do Not Disturb (DND)—SUMMARY

12.2.3 PBX Configuration—[4-2-3] Extension—Portable Station—Flexible Button

Each flexible button can be customised to allow one-touch access to a certain feature. A maximum of 12 flexible buttons can be customised for each PS. Select the desired PS from the **Extension Number / Name** list.
To copy values from one location to another, click the **Copy to** button.
For more information on flexible buttons, see "2.21.2 Flexible Buttons" in the Feature Guide.

◆ Type

Specifies the feature to be assigned to the flexible button.

Value Range

Not Stored, Loop CO, Single CO, Group CO, DSS, One-touch, ICD Group, Message Waiting, FWD/DND (Both), FWD/DND (External), FWD/DND (Internal), Group Fwd (Both), Group Fwd (External), Group Fwd (Internal), Account, Conference, Terminate, EFA, Charge, Call Park, Log-in/Log-out, Hurry-up, Wrap-up, Time Service, TRS Level Change, ISDN Service, CLIR, COLR, ISDN Hold, Time Service - Automatic/Manual, Two-way Record, Two-way Transfer, LCS, Voice Mail Transfer, NDSS, CTI, PDN, SDN

PC Programming Manual References

12.2.3.1 PBX Configuration—[4-2-3] Extension—Portable Station—Flexible Button—Flexible button data copy

◆ Parameter Selection (for Single CO)

Specifies the trunk to be accessed.

Value Range

1–142

Feature Guide References

2.5.5.3 Trunk Access

◆ Parameter Selection (for Group CO)

Specifies the trunk group to be accessed.

Value Range

1–64

Feature Guide References

2.5.5.3 Trunk Access

◆ Parameter Selection (for Call Park)

Specifies whether a call is parked in an idle parking zone automatically, or in a specific parking zone.

Value Range

Automatic, Specific

Feature Guide References

2.13.2 Call Park

◆ Parameter Selection (for Log-in/Log-out)

Specifies which incoming call distribution groups that the PS belongs to are logged in to or logged out from.

Value Range

None: The incoming call distribution group is selected manually.
All: All incoming call distribution groups that the PS belongs to.
Incoming Group: A pre-specified incoming call distribution group

Feature Guide References

2.2.2.7 Log-in/Log-out

◆ Parameter Selection (for Time Service)

Selects which time modes are switched manually.

Value Range

All (Day/Night/Lunch/Break), Day/Night/Break, Day/Night/Lunch, Day/Night

Feature Guide References

5.1.4 Time Service

◆ Parameter Selection (for TRS Level Change)

Specifies the TRS/Barring level to be used temporarily on a certain PS.

Value Range

Level 1–Level 7

Feature Guide References

2.7.1 Toll Restriction (TRS)/Call Barring (Barring)
2.7.4 Dial Tone Transfer

◆ Parameter Selection (for Time Service - Automatic/Manual)

Specifies the Time Table to be used when the Time Service Switching Mode is set to Automatic.

Value Range

Table 1–Table 8

Feature Guide References

5.1.4 Time Service

◆ Parameter Selection (for SDN)

Specifies the delayed ringing setting for calls arriving at an SDN button.
The value specified here is only used when ◆ **System Wireless—SDN Delayed Ringing with LCD** on **10.9 PBX Configuration—[2-9] System—System Options** is set to "Enable".

Value Range

Immediate, 1 Ring, 2 Rings, 3 Rings, 4 Rings, 5 Rings, 6 Rings, No Ring

PC Programming Manual References

10.9 PBX Configuration—[2-9] System—System Options—Option 4—◆ System Wireless—SDN Delayed Ringing with LCD

Feature Guide References

2.9.1 Primary Directory Number (PDN)/Secondary Directory Number (SDN) Extension

◆ Extension Number (for DSS)

Specifies the number of an extension to be accessed.

Value Range

Max. 5 digits (consisting of 0–9)

◆ Extension Number (for ICD Group)

Specifies the floating extension number of an incoming call distribution group to be accessed.

Value Range

Max. 5 digits (consisting of 0–9)

◆ Extension Number (for Message Waiting)

Specifies the number of an extension or floating extension number of an incoming call distribution group for which messages are checked. If this cell is left empty, the PS will check its own messages only.

Value Range

Max. 5 digits (consisting of 0–9)

◆ Extension Number (for Group Fwd (Both))

Specifies the floating extension number of an incoming call distribution group for which both intercom and trunk calls are forwarded.

Value Range

Max. 5 digits (consisting of 0–9)

Feature Guide References

2.3.1 Call Forwarding (FWD)/Do Not Disturb (DND)—SUMMARY

◆ Extension Number (for Group Fwd (External))

Specifies the floating extension number of an incoming call distribution group for which trunk calls are forwarded.

Value Range

Max. 5 digits (consisting of 0–9)

Feature Guide References

2.3.1 Call Forwarding (FWD)/Do Not Disturb (DND)—SUMMARY

◆ Extension Number (for Group Fwd (Internal))

Specifies the floating extension number of an incoming call distribution group for which intercom calls are forwarded.

Value Range

Max. 5 digits (consisting of 0–9)

Feature Guide References

2.3.1 Call Forwarding (FWD)/Do Not Disturb (DND)—SUMMARY

◆ Extension Number (for Log-in/Log-out)

Specifies the floating extension number of an incoming call distribution group to log-in to or log-out from.

Value Range

Max. 5 digits (consisting of 0–9)

◆ Extension Number (for Hurry-up)

Specifies the floating extension number of the incoming call distribution group whose longest waiting call will be redirected (Manual Queue Redirection).

Value Range

Max. 5 digits (consisting of 0–9)

Feature Guide References

2.2.2.4 Queuing Feature

◆ Extension Number (for Two-way Record)

Specifies the floating extension number of the UM/VM (DPT) group containing the PS’s mailbox.

Value Range

Max. 5 digits (consisting of 0–9)

Feature Guide References

2.28.3 Voice Mail DPT (Digital) Integration
3.1.1 Unified Messaging System Overview

◆ Extension Number (for Two-way Transfer)

Specifies the floating extension number of the UM/VM (DPT) group containing the desired mailbox.

Value Range

Max. 5 digits (consisting of 0–9)

Feature Guide References

2.28.3 Voice Mail DPT (Digital) Integration
3.1.1 Unified Messaging System Overview

◆ Extension Number (for Voice Mail Transfer)

Specifies the floating extension number of the UM/VM (DTMF/DPT) group containing the desired mailbox.

Value Range

Max. 8 digits (consisting of 0–9)

Feature Guide References

2.28.2 Voice Mail DTMF Integration
2.28.3 Voice Mail DPT (Digital) Integration
3.1.1 Unified Messaging System Overview

◆ Extension Number (for SDN)

Specifies the floating extension number of the corresponding (owner) extension for the SDN button.
Note that the extension specified here must have a PDN button registered for the SDN button to function.

Value Range

Max. 5 digits (consisting of 0–9)

Feature Guide References

2.9.1 Primary Directory Number (PDN)/Secondary Directory Number (SDN) Extension

◆ Extension Name

Indicates the name of the extension, when an extension number is specified (reference only).

Value Range

Max. 20 characters

◆ Dial (for One-touch)

Specifies the number to be dialled. The PBX can have a maximum of 500 One-touch Dialling buttons for PSs.

Value Range

Max. 32 digits (consisting of 0–9, *, #, T [Transfer], [ ] [Secret], P [Pause], and F [Flash])

Feature Guide References

2.6.2 One-touch Dialling

◆ Dial (for ISDN Service)

Specifies the number required to access the telephone company's ISDN service.

Value Range

Max. 32 digits (consisting of 0–9, *, #, T [Transfer], [ ] [Secret], P [Pause], and F [Flash])

Feature Guide References

4.1.2.10 ISDN Service Access by Keypad Protocol

◆ Dial (for NDSS)

Specifies the network extension number of the extension to be accessed using Network Direct Station Selection.
Note that only extension numbers that have been previously registered in **17.4 PBX Configuration—[9-4] Private Network—NDSS Key Table** can be specified here.

Value Range

Max. 16 digits (consisting of 0–9)

Feature Guide References

4.2.5.1 Network Direct Station Selection (NDSS)

◆ Optional Parameter (or Ringing Tone Type Number) (for Time Service)

Specifies the Time Table to be used for changing time modes in the Automatic Switching mode.

Value Range

Table 1–Table 8

Feature Guide References

5.1.4 Time Service

◆ Optional Parameter (or Ringing Tone Type Number) (for Call Park)

Specifies the number of the parking zone a call is to be parked in when a Call Park button with ◆ **Parameter Selection (for Call Park)** on this screen set to **Specific** is pressed.

Value Range

Park 00–Park 99

Feature Guide References

2.13.2 Call Park

◆ Ext No. of Mailbox (for Two-way Transfer)

Specifies the number of the extension whose mailbox will be used to record conversations using One-touch Two-way Transfer. (For example, a secretary can record a conversation into the mailbox of a boss.) If the cell is left empty, the extension user must specify the number of an extension each time.

Value Range

Max. 5 digits (consisting of 0–9)

Feature Guide References

2.28.3 Voice Mail DPT (Digital) Integration
3.1.1 Unified Messaging System Overview

12.2.3.1 PBX Configuration—[4-2-3] Extension—Portable Station—Flexible Button—Flexible button data copy

The flexible button settings of a PS can be copied to different PSs.

◆ Destination Extension Line

Select the number and name of the PS that will receive the copied settings. Multiple PSs can be selected. To select all PSs at once, click **Select All**.
When selecting multiple extensions, note that if the source extension has an SDN button, the copy operation cannot be performed.

PC Programming Manual References

12.2.3 PBX Configuration—[4-2-3] Extension—Portable Station—Flexible Button

12.2.4 PBX Configuration—[4-2-4] Extension—Portable Station—NDSS Link Data - Send

It is possible to cancel the transmission of an extension's status data over the network. Select the desired extension from the **Extension Number / Name** list.
This screen can be accessed only in On-line mode.

◆ Network BLF Data to NDSS Key of Other PBX - Other PBX (Network PBX ID=1)

Selects whether extension status data is transmitted over the network for the selected extension. This setting is automatically set to **ON** when the feature is used, and can only be manually changed from **ON** to **OFF**, to cancel data transmission.

Value Range

OFF, ON

PC Programming Manual References

17.4 PBX Configuration—[9-4] Private Network—NDSS Key Table

Feature Guide References

4.2.5.1 Network Direct Station Selection (NDSS)

12.2.5 PBX Configuration—[4-2-5] Extension—Portable Station—CLIP ID Table

Up to 8 CLIP IDs can be set for each wireless extension.

◆ Extension Number

Indicates the extension number of the PS (reference only).

Value Range

Max. 5 digits (consisting of 0–9)

◆ Extension Name

Indicates the name of the PS (reference only).

Value Range

Max. 20 characters

◆ CLIP 1–8

Specifies up to 8 CLIP IDs for the PS.

Value Range

Max. 16 digits (consisting of 0–9, *, and #)

12.2.6 PBX Configuration-[4-2-6] Extension—Portable Station—Simplified Voice Message

The built-in Simplified Voice Message feature can be provided for each PS. This screen allows you to specify which extension uses this feature, and the maximum number of messages that can be stored for each extension.
For more information on Simplified Voice Message, see 2.16.3 Built-in Simplified Voice Message (SVM) in the Feature Guide.

◆ Extension Number

Indicates the extension number (reference only).

Value Range

Max. 5 digits (consisting of 0–9)

PC Programming Manual References

9.34 PBX Configuration—[1-2] Configuration—Portable Station

◆ Extension Name

Indicates the name of the extension (reference only).

Value Range

Max. 20 characters

PC Programming Manual References

9.34 PBX Configuration—[1-2] Configuration—Portable Station
12.2.1 PBX Configuration—[4-2-1] Extension—Portable Station—Extension Settings

◆ Simplified Voice Message

Specifies whether to enable the Simplified Voice Message feature.

Value Range

Enable, Disable

PC Programming Manual References

9.1 PBX Configuration—[1-1] Configuration—Slot

Feature Guide References

2.16.3 Built-in Simplified Voice Message (SVM)

◆ Maximum of SVM Log

Specifies the maximum number of voice messages (not including greeting messages) that can be stored for the extension.

Value Range

0–100

Feature Guide References

2.16.3 Built-in Simplified Voice Message (SVM)

12.3 PBX Configuration—[4-3] Extension—DSS Console

A DSS Console can be used in conjunction with a PT. A maximum of 8 DSS Consoles can be programmed. The **DPT Type—Type** of the extension port that DSS Console is connected must be set to **DSS** in 9.22 PBX Configuration—[1-1] Configuration—Slot—Extension—Port Property.
Each flexible DSS button can be customised to access a certain feature. A maximum of 66 flexible DSS buttons can be customised for each DSS Console.
To copy DSS Console setting values from one location to another, click the Copy to button.
For more information on flexible buttons, see **2.21.2 Flexible Buttons** in the Feature Guide.
Once flexible DSS buttons have been programmed, the Terminal Label Print utility can be used to print label sheets, which can be attached to your DSS Console for quick reference. For details, see **1.2.2.1 Editing and Printing Terminal Labels in Off-line Mode**.

◆ Pair Extension

Specifies the extension number of the PT to be used in pair with the DSS Console. Note that if one or more SDN buttons have been set at the DSS Console, they must be deleted before this setting can be changed.

Value Range

None, Max. 5 digits (consisting of 0–9)

◆ Type

Specifies the feature to be assigned to the flexible DSS button.

Value Range

Not Stored, Loop CO, Single CO, Group CO, DSS, One-touch, ICD Group, Message Waiting, FWD/DND (Both), FWD/DND (External), FWD/DND (Internal), Group Fwd (Both), Group Fwd (External), Group Fwd (Internal), Account, Conference, Terminate, EFA, Charge, Call Park, Call Log, Log-in/Log-out, Hurry-up, Wrap-up, System Alarm, Time Service, Answer, Release, TRS Level Change, ISDN Service, CLIR, COLR, ISDN Hold, Headset, Time Service - Automatic/Manual, Check In, Check Out, Cleaned Up, Two-way Record, Two-way Transfer, LCS, Voice Mail Transfer, NDSS, CTI, SDN, DN

PC Programming Manual References

12.3 PBX Configuration—[4-3] Extension—DSS Console

Feature Guide References

2.21.2 Flexible Buttons

◆ Parameter Selection (for Single CO)

Specifies the trunk to be accessed.

Value Range

1–142

Feature Guide References

2.5.5.3 Trunk Access

◆ Parameter Selection (for Group CO)

Specifies the trunk group to be accessed.

Value Range

1–64

Feature Guide References

2.5.5.3 Trunk Access

◆ Parameter Selection (for Call Park)

Specifies whether a call is parked in an idle parking zone automatically or in a specific parking zone.

Value Range

Automatic, Specific

Feature Guide References

2.13.2 Call Park

◆ Parameter Selection (for Log-in/Log-out)

Specifies which incoming call distribution groups that the paired extension belongs to are logged in to or logged out from.

Value Range

None: The incoming call distribution group is selected manually.
All: All incoming call distribution groups that the paired extension belongs to.
Incoming Group: A pre-specified incoming call distribution group

Feature Guide References

2.2.2.7 Log-in/Log-out

◆ Parameter Selection (for Time Service)

Selects which time modes are switched manually.

Value Range

All (Day/Night/Lunch/Break), Day/Night/Break, Day/Night/Lunch, Day/Night

Feature Guide References

5.1.4 Time Service

◆ Parameter Selection (for TRS Level Change)

Specifies the TRS/Barring level to be used temporarily on a certain extension.

Value Range

1-7

Feature Guide References

2.7.1 Toll Restriction (TRS)/Call Barring (Barring)
2.7.4 Dial Tone Transfer

◆ Parameter Selection (for Time Service - Automatic/Manual)

Specifies the Time Table to be used when the Time Service Switching Mode is set to Automatic.

Value Range

1-8

Feature Guide References

5.1.4 Time Service

◆ Parameter Selection (for SDN)

Specifies the delayed ringing setting for calls arriving at an SDN button.

Value Range

Immediate, 1 Ring, 2 Rings, 3 Rings, 4 Rings, 5 Rings, 6 Rings, No Ring

Feature Guide References

2.9.1 Primary Directory Number (PDN)/Secondary Directory Number (SDN) Extension

◆ Extension Number (for DSS)

Specifies the number of an extension to be accessed.

Value Range

Max. 5 digits (consisting of 0–9)

◆ Extension Number (for ICD Group)

Specifies the floating extension number of an incoming call distribution group to be accessed.

Value Range

Max. 5 digits (consisting of 0–9)

◆ Extension Number (for Message Waiting)

Specifies the number of an extension or floating extension number of an incoming call distribution group for which messages are checked. If this cell is left empty, the paired extension will check its own messages only.

Value Range

Max. 5 digits (consisting of 0–9)

◆ Extension Number (for Group Fwd (Both))

Specifies the floating extension number of an incoming call distribution group for which both intercom and trunk calls are forwarded.

Value Range

Max. 5 digits (consisting of 0–9)

Feature Guide References

2.3 Call Forwarding (FWD)/Do Not Disturb (DND) Features

◆ Extension Number (for Group Fwd (External))

Specifies the floating extension number of an incoming call distribution group for which trunk calls are forwarded.

Value Range

Max. 5 digits (consisting of 0–9)

Feature Guide References

2.3 Call Forwarding (FWD)/Do Not Disturb (DND) Features

◆ Extension Number (for Group Fwd (Internal))

Specifies the floating extension number of an incoming call distribution group for which intercom calls are forwarded.

Value Range

Max. 5 digits (consisting of 0–9)

Feature Guide References

2.3 Call Forwarding (FWD)/Do Not Disturb (DND) Features

◆ Extension Number (for Call Log)

Specifies the paired extension's number or the floating extension number of an incoming call distribution group for which call log information is displayed. If the cell is left empty, the paired extension will display its own call log information.

Value Range

Max. 5 digits (consisting of 0–9)

◆ Extension Number (for Log-in/Log-out)

Specifies the floating extension number of an incoming call distribution group to log-in to or log-out from.

Value Range

Max. 5 digits (consisting of 0–9)

◆ Extension Number (for Hurry-up)

Specifies the floating extension number of the incoming call distribution group whose longest waiting call will be redirected (Manual Queue Redirection).

Value Range

Max. 5 digits (consisting of 0–9)

Feature Guide References

2.2.2.4 Queuing Feature

◆ Extension Number (for Two-way Record)

Specifies the floating extension number of the UM/VM (DPT) group containing the paired extension's mailbox.

Value Range

Max. 5 digits (consisting of 0–9)

Feature Guide References

2.28.3 Voice Mail DPT (Digital) Integration
3.1.1 Unified Messaging System Overview

◆ Extension Number (for Two-way Transfer)

Specifies the floating extension number of the UM/VM (DPT) group containing the desired mailbox.

Value Range

Max. 5 digits (consisting of 0–9)

Feature Guide References

2.28.3 Voice Mail DPT (Digital) Integration
3.1.1 Unified Messaging System Overview

◆ Extension Number (for Voice Mail Transfer)

Specifies the floating extension number of the UM/VM (DTMF/DPT) group containing the desired mailbox.

Value Range

Max. 8 digits (consisting of 0–9)

Feature Guide References

2.28.2 Voice Mail DTMF Integration
2.28.3 Voice Mail DPT (Digital) Integration
3.1.1 Unified Messaging System Overview

◆ Extension Number (for SDN)

Specifies the floating extension number of the PDN extension corresponding to the SDN button. Note that the extension specified here must have a PDN button registered for the SDN button to function.

Value Range

Max. 5 digits (consisting of 0–9)

Feature Guide References

2.1.1.2 Direct In Line (DIL)

◆ Extension Name

Indicates the name of the extension, when an extension number is specified (reference only).

Value Range

Max. 20 characters

◆ Dial (for One-touch)

Specifies the number to be dialled. The PBX can have a maximum of 2000 One-touch Dialling buttons for extensions and DSS Consoles.

Value Range

Max. 32 digits (consisting of 0–9, *, #, T [Transfer], [ ] [Secret], P [Pause], and F [Flash])

Feature Guide References

2.6.2 One-touch Dialling

◆ Dial (for ISDN Service)

Specifies the number required to access the telephone company's ISDN service.

Value Range

Max. 32 digits (consisting of 0–9, *, #, T [Transfer], [ ] [Secret], P [Pause], and F [Flash])

Feature Guide References

4.1.2.10 ISDN Service Access by Keypad Protocol

◆ Dial (for NDSS)

Specifies the network extension number of the extension to be accessed using Network Direct Station Selection. Note that only extension numbers that have been previously registered in 17.4 PBX Configuration—[9-4] Private Network—NDSS Key Table can be specified here.

Value Range

Max. 16 digits (consisting of 0–9, *, #, T [Transfer], [ ] [Secret], P [Pause], and F [Flash])

Feature Guide References

4.2.5.1 Network Direct Station Selection (NDSS)

◆ Optional Parameter (Ringing Tone Type Number) (for Time Service)

Specifies the Time Table to be used for changing time modes in the Automatic Switching mode.

Value Range

1-8

Feature Guide References

5.1.4 Time Service

◆ Optional Parameter (Ringing Tone Type Number) (for Loop CO, Single CO, Group CO, ICD Group, SDN)

Specifies the ring tone type.

Value Range

KX-DT300 series (except KX-DT321)/KX-T7600 series (except KX-T7665)/IP-PT (except KX-NT265/KX-NT321): 1–30
KX-DT321/KX-T7665/KX-NT265/KX-NT321: 1–8 (Even if ring tone 9–30 is selected, ring tone 1 is heard.)
Other telephones: 1–8 (Even if ring tone 9–30 is selected, ring tone 2 is heard.)

◆ Optional Parameter (Ringing Tone Type Number) (for Call Park)

Specifies the number of the parking zone a call is to be parked in when a Call Park button with Parameter Selection (for Call Park) on this screen set to Specific is pressed.

Value Range

0-99

Feature Guide References

2.13.2 Call Park

◆ Ext No. of Mailbox (for Two-way Transfer)

Specifies the number of the extension whose mailbox will be used to record conversations using One-touch Two-way Transfer. (For example, a secretary can record a conversation into the mailbox of a boss.) If the cell is left empty, the extension user must specify the number of an extension each time.

Value Range

Max. 5 digits (consisting of 0–9)

Feature Guide References

2.28.3 Voice Mail DPT (Digital) Integration
3.1.1 Unified Messaging System Overview

12.3.1 PBX Configuration—[4-3] Extension—DSS Console—DSS key data copy

The flexible DSS button settings (including key label settings) of a DSS Console can be copied to different DSS Consoles. Select the DSS Console that has the setting to copy to other DSS Consoles from the DSS Console No./Pair Extension list, then click **Copy to**.

Destination DSS Console

Select the number of the DSS Console and paired extension. Multiple DSS Consoles can be selected. To select all DSS Consoles at once, click Select All.
When selecting multiple extensions, note that if the source extension has an SDN button, the copy operation cannot be performed.

PC Programming Manual References

12.3 PBX Configuration—[4-3] Extension—DSS Console

Section 13

PBX Configuration—[5] Optional Device

This section serves as reference operating instructions for the Optional Device menu of the PBX Configuration menu of the Setup screen of Web Maintenance Console.

13.1 PBX Configuration—[5-1] Optional Device—Doorphone

The settings to establish doorphone calls can be programmed.
To assign destinations for doorphone calls easily, click **Destination Setting** (see **2.1.6 Extension Number Setting**).
The **Shelf**, **Slot**, and **Port** for each item are displayed for your reference. For details, see **Common Programming Reference Items** in **9.1 PBX Configuration—[1-1] Configuration—Slot**.

◆ DOORPHONE Number

Indicates the number of the doorphone (reference only).

Value Range

Doorphone number

Feature Guide References

2.18.1 Doorphone Call

◆ Name

Specifies the doorphone name.

Value Range

Max. 20 characters

Feature Guide References

2.18.1 Doorphone Call

◆ Destination—Day, Lunch, Break, Night

Specifies the destination number of doorphone calls for each port in each time mode.

Value Range

Max. 32 digits (consisting of 0–9, *, #, [ ] [Secret], and P [Pause])

PC Programming Manual References

10.4 PBX Configuration—[2-4] System—Week Table

Feature Guide References

2.18.1 Doorphone Call

◆ Tenant Number

Specifies the tenant number for the doorphone port in order to apply the Time Table (day/lunch/break/night).

Value Range

1–8

PC Programming Manual References

10.4 PBX Configuration—[2-4] System—Week Table

Feature Guide References

2.18.1 Doorphone Call
5.1.3 Tenant Service

◆ COS

Specifies the Class of Service (COS) number. COS programming determines the doorphone ports that are able to make trunk calls, and sets restrictions on intercom calls from certain extensions (Internal Call Block).

Value Range

1–64

PC Programming Manual References

10.7.1 PBX Configuration—[2-7-1] System—Class of Service—COS Settings—TRS—◆ TRS Level—Day, Lunch, Break, Night
10.7.3 PBX Configuration—[2-7-3] System—Class of Service—Internal Call Block

Feature Guide References

2.1.2.2 Internal Call Block
2.18.1 Doorphone Call

◆ Service Group Number

Specifies the Service Group number sent to the Unified Messaging system when the incoming call destination is the floating extension number of a UM group.
The Service Group number is used to allow the Unified Messaging system to send the applicable greeting message to the caller.

Value Range

None, 1–64

Feature Guide References

2.18.1 Doorphone Call
3.1.1 Unified Messaging System Overview

◆ VM Trunk Group No.

Specifies the number of the VM trunk group sent to the VPS when the incoming call destination is the floating extension number of a VM (DPT) Group. The VM trunk group number is used to allow the VPS to send the applicable greeting message to the caller.

Value Range

1–48

13.2 PBX Configuration—[5-2] Optional Device—External Pager

Settings for the external pager (external speaker) can be specified.
Click **Extension List View** to view a list of all programmed extension numbers and types (see **6.4 Tool—Extension List View**).

◆ ID

Indicates the External Pager ID (reference only).

Value Range

1–6

◆ Floating Extension Number

Specifies the floating extension number of the external pager.

Value Range

Max. 5 digits (consisting of 0–9)

Feature Guide References

2.17.1 Paging
2.17.2 Trunk Answer From Any Station (TAFAS)
2.30.1 Background Music (BGM)

◆ Name

Specifies the name of the external pager.

Value Range

Max. 20 characters

Feature Guide References

2.17.1 Paging
2.17.2 Trunk Answer From Any Station (TAFAS)
2.30.1 Background Music (BGM)

13.3 PBX Configuration—[5-3] Optional Device—Voice Message

13.3.1 PBX Configuration—[5-3-1] Optional Device—Voice Message—DISA System

Direct Inward System Access (DISA) enables outside callers to access specific PBX features as if the caller were using an SLT extension of the PBX.
For more information on DISA, see "2.16.1 Direct Inward System Access (DISA)" in the Feature Guide.

Option 1

◆ DISA Security—DISA Security Mode

Selects the DISA security mode to prevent unauthorised access to the PBX. In Trunk or All Security mode, the caller is required to override security by Walking COS or Verification Code Entry in order to enable the restricted feature temporarily.

Value Range

None: Intercom calls, TIE line calls, and trunk calls can be made.
Trunk: Intercom calls and TIE line calls without PBX code can be made. TIE line calls with PBX code and trunk calls are restricted.
All: All calls are restricted.

Feature Guide References

2.7.5 Walking COS
2.7.6 Verification Code Entry

◆ DISA Security—Remote Walking COS through DISA without PIN (Activation Key Required)

Enables registered caller ID numbers to be automatically recognised as PBX extensions when calling through DISA, and to use the Walking COS features without entering a PIN.

Value Range

Disable, Enable (Get DISA)

◆ DISA Intercept—Intercept when destination through DISA sets DND

Selects how DISA calls are handled if the destination sets DND, and disables Idle Extension Hunting.

Value Range

Busy Tone, Enable, Busy Message

◆ DISA Intercept—Intercept when all DISA ports are busy

Selects how DISA calls are handled if all DISA ports are currently in use.

Value Range

to Operator, to AA-0, to AA-9, Disable (Busy Tone)

◆ DISA Intercept—Intercept when No Dial after DISA answers

Selects how DISA calls are handled if the caller does not select any option from the menu.

Value Range

to Operator, to AA-0, to AA-9, Disable (Reorder Tone)

◆ CO-CO with DISA—DISA to Public CO

Specifies whether the DISA port is released when a trunk-to-public trunk call using DISA is established. To enable this setting, "**◆ CO-CO with DISA—Fwd/Transfer to Public CO**" on this screen should be set to "**Enable**".
Setting this to "**Disable**" will free up DISA ports faster, but prevent DISA being used to detect the end of a call and disconnect the trunk quickly.

Value Range

Disable (Release DISA): The DISA port is released when a trunk-to-public trunk call using DISA is established.
Enable: DISA stays connected for the duration of the call, to allow detection of the end of the call.

PC Programming Manual References

13.3.1 PBX Configuration—[5-3-1] Optional Device—Voice Message—DISA System—Option 1—◆ CO-CO with DISA—Fwd/Transfer to Public CO

◆ CO-CO with DISA—DISA to Private Network

Specifies whether the DISA port is released when a trunk-to-private trunk call using DISA is established.
To enable this setting, "**◆ CO-CO with DISA—Fwd/Transfer to Private Network**" on this screen should be set to "**Enable**".
Setting this to "**Disable**" will free up DISA ports faster, but prevent DISA being used to detect the end of a call and disconnect the trunk quickly.

Value Range

Disable (Release DISA): The DISA port is released when a trunk-to-private trunk call using DISA is established.
Enable: DISA stays connected for the duration of the call, to allow detection of the end of the call.

PC Programming Manual References

13.3.1 PBX Configuration—[5-3-1] Optional Device—Voice Message—DISA System—Option 1—◆ CO-CO with DISA—Fwd/Transfer to Private Network

◆ CO-CO with DISA—Fwd/Transfer to Public CO

Enables trunk-to-public trunk calls to be established using DISA.

Value Range

Disable: Trunk-to-public trunk calls are established without using DISA.

Enable (Get DISA): Trunk-to-public trunk calls are established using DISA, and DISA can be used to detect the end of the call.

PC Programming Manual References

13.3.1 PBX Configuration—[5-3-1] Optional Device—Voice Message—DISA System—Option 1—◆ CO-CO with DISA—DISA to Public CO

◆ CO-CO with DISA—Fwd/Transfer to Private Network

Enables trunk-to-private trunk calls to be established using DISA.

Value Range

Disable: Trunk-to-private trunk calls are established without using DISA.
Enable (Get DISA): Trunk-to-private trunk calls are established using DISA, and DISA can be used to detect the end of the call.

PC Programming Manual References

13.3.1 PBX Configuration—[5-3-1] Optional Device—Voice Message—DISA System—Option 1—◆ CO-CO with DISA—DISA to Private Network

◆ CO-CO with DISA—Transfer by DTMF "#" (Activation Key Required)

Specifies whether an outside party such as a cellular phone can transfer a trunk call to an extension within the PBX by dialling "#" + extension number.

Value Range

Disable: "#" is ignored if dialled.
Enable (as "Flash"): The current trunk call will be placed on hold, then transferred to the extension whose number is entered.

◆ CO-CO with DISA—Return to DISA Top Menu by DTMF "*"

Enables a trunk caller to return to the DISA top menu by pressing "⁎" while hearing a ringback, reorder, or busy tone. If disabled, retrying the call is possible by pressing "⁎".

Value Range

Disable, Enable

Option 2

◆ DISA Cyclic Tone Detection

Selects the cyclic tone detection mode. Cyclic tone detection is used to determine the end of a call for a DISA trunk-to-trunk conversation established through an analogue trunk.
This setting is only available when DPS cards are not installed.

Value Range

Fixed: The number of times of a tone pattern (a set of tone-on and tone-off) that the PBX receives is fixed to 4 times in the ranges of:

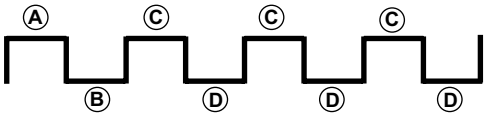

Ⓐ,Ⓑ = 100–1300 ms, Ⓒ = Ⓐ±90 ms, Ⓓ = Ⓑ±90 ms
Option: The tone pattern that the PBX receives is optional as specified in **DISA Cyclic Tone Option** on this screen.

◆ DISA Cyclic Tone Option—Tone on Maximum Time (ms)

Specifies the maximum duration of the cyclic tone that will be recognised by the PBX. When the tone sent from the telephone company is shorter than the value set here, the PBX recognises it as a tone-on.
Note that this option can only be set when ◆ **DISA Cyclic Tone Detection** on this screen is set to "Option".

Value Range

10 × n (n=11–400) ms

◆ DISA Cyclic Tone Option—Tone off Maximum Time (ms)

Specifies the maximum time that the PBX waits for a cyclic tone to be sent from the telephone company before recognising it as a tone-off. When no tone is detected within the time set here, the PBX recognises it as a tone-off.
Note that this option can only be set when ◆ **DISA Cyclic Tone Detection** on this screen is set to "Option".

Value Range

10 × n (n=11–400) ms

◆ DISA Cyclic Tone Option—Repeating Times of ON/OFF for Detection

Specifies the number of times the tone pattern (a set of tone-on and tone-off) must be received to establish reception of the cyclic tone. This determines the end of call.
Note that this option can only be set when ◆ **DISA Cyclic Tone Detection** on this screen is set to "Option".

Value Range

3–16

◆ Timed Reminder Message—Day, Lunch, Break, Night

Specifies the pre-recorded message to play when a Timed Reminder call is answered in each time mode.

Value Range

None, 1–64

PC Programming Manual References

13.3.2 PBX Configuration—[5-3-2] Optional Device—Voice Message—DISA Message

Feature Guide References

2.24.4 Timed Reminder

13.3.2 PBX Configuration—[5-3-2] Optional Device—Voice Message—DISA Message

Outgoing messages (OGM) for DISA calls can be specified. A maximum of 64 OGMs can be programmed. To view a list of all programmed extension numbers and types, click **Extension List View** (see **6.4 Tool—Extension List View**). To assign AA destinations easily, click **Destination Setting** (see **2.1.6 Extension Number Setting**).

◆ Floating Extension Number

Specifies the floating extension number of the OGM.

Value Range

Max. 5 digits (consisting of 0–9)

Feature Guide References

2.30.2 Outgoing Message (OGM)
2.16.1 Direct Inward System Access (DISA)
5.5.8 Floating Extension

◆ Name

Specifies the name of the OGM.

Value Range

Max. 20 characters

Feature Guide References

2.30.2 Outgoing Message (OGM)
2.16.1 Direct Inward System Access (DISA)

◆ 1 Digit AA Destination (Extension Number)—Dial 0–9

Specifies the destination for each DISA Automated Attendant (AA) number. After listening to an OGM, the caller can be directed to the destination by dialling a 1-digit DISA AA number.

Value Range

Max. 5 digits (consisting of 0–9, *, and #)

Feature Guide References

2.30.2 Outgoing Message (OGM)
2.16.1 Direct Inward System Access (DISA)

◆ Busy / DND Message No.

Selects the OGM to be played for the caller when the destination party is busy or sets DND.

Value Range

None, 1–64

PC Programming Manual References

13.3.1 PBX Configuration—[5-3-1] Optional Device—Voice Message—DISA System

Feature Guide References

2.16.1 Direct Inward System Access (DISA)

◆ Fax Extension

Specifies the extension number to which to transfer a call when a fax signal is detected.

Value Range

Max. 5 digits (consisting of 0–9)

Feature Guide References

2.16.2 Automatic Fax Transfer

13.3.3 PBX Configuration—[5-3-3] Option Device—Voice Message—SVM

Settings related to Built-in Simplified Voice Message feature can be specified. This feature can be accessed via the MPR card.

◆ SVM—Floating Extension Number

Specifies the floating extension number used to access the SVM feature.

Value Range

Max. 5 digits (consisting of 0–9)

Feature Guide References

2.16.3 Built-in Simplified Voice Message (SVM)

◆ SVM—Card Name

Specifies the name of the card, for programming reference.

Value Range

Max. 20 characters

Feature Guide References

2.16.3 Built-in Simplified Voice Message (SVM)

◆ Remote Access

Selects whether the Walking COS feature can be used while listening to a greeting message from the SVM feature. Using Walking COS, a user can access his or her message box remotely.

Value Range

Disable, Enable

PC Programming Manual References

12.1.8 PBX Configuration-[4-1-8] Extension-Wired Extension-Simplified Voice Message
12.2.6 PBX Configuration-[4-2-6] Extension—Portable Station—Simplified Voice Message

Feature Guide References

2.16.3 Built-in Simplified Voice Message (SVM)

◆ SVM Cyclic Tone Detection

Specifies the SVM cyclic tone detection mode.

Value Range

Fixed, Option

Feature Guide References

2.16.3 Built-in Simplified Voice Message (SVM)

◆ SVM Cyclic Tone Option—Tone On Maximum Time

Specifies the maximum duration of the cyclic tone that will be recognised by the PBX. When the tone sent from the telephone company is shorter than the value set here, the PBX recognises it as a tone-on.
Note that this option can only be set when SVM Cyclic Tone Detection on this screen is set to "Option".

Value Range

20 x n (n=6–200) ms

PC Programming Manual References

9.1 PBX Configuration—[1-1] Configuration—Slot

Feature Guide References

2.16.3 Built-in Simplified Voice Message (SVM)

◆ SVM Cyclic Tone Option—Tone Off Maximum Time

Specifies the maximum time that the PBX waits for a cyclic tone to be sent from the telephone company before recognising it as a tone-off. When no tone is detected within the time set here, the PBX recognises it as a tone-off.

Value Range

20 x n (n=6–200) ms

PC Programming Manual References

9.1 PBX Configuration—[1-1] Configuration—Slot

Feature Guide References

2.16.3 Built-in Simplified Voice Message (SVM)

◆ SVM Cyclic Tone Option—Repeating Times of ON/OFF for Detection

Specifies the number of times the tone pattern (a set of tone-on and tone-off) must be received to establish reception of the cyclic tone. This determines the end of call.
Note that this option can only be set when SVM Cyclic Tone Detection on this screen is set to "Option".

Value Range

3-16

Feature Guide References

2.16.3 Built-in Simplified Voice Message (SVM)

◆ SLT Dial "*" Operation Mode

Specifies the SLT dial "*" operation mode to avoid wrong DTMF signal detection from the SLT. If "Enable" is selected, you need to dial "*" before dialling.

Value Range

Enable, Disable

Feature Guide References

2.16.3 Built-in Simplified Voice Message (SVM)

13.4 PBX Configuration—[5-4] Optional Device—External Relay

Settings related to external relays can be programmed.
Before programming these settings, ◆ **For Output - Device Type** must be set to "Relay" in the DOORPHONE card's property settings. (→ **9.33 PBX Configuration—[1-1] Configuration—Slot—DOORPHONE Card—Card Property**)
The **Shelf**, **Slot**, and **Port** for each item are displayed for your reference. For details, see **Common Programming Reference Items** in **9.1 PBX Configuration—[1-1] Configuration—Slot**.

◆ External Relay No.

Indicates the number of the external relay (reference only).

Value Range

1–8

Feature Guide References

2.18.4 External Relay Control

◆ Name

Specifies the relay name.

Value Range

Max. 20 characters

Feature Guide References

2.18.4 External Relay Control

◆ Relay Activate Time

Specifies the length of time that the relay stays on when activated.

Value Range

1–7 s

Feature Guide References

2.18.4 External Relay Control

◆ COS Number

Specifies the Class of Service (COS) number. COS programming determines the extensions that are able to activate relays.

Value Range

1–64

PC Programming Manual References

10.7.1 PBX Configuration—[2-7-1] System—Class of Service—COS Settings—Optional Device & Other Extensions—◆ External Relay Access

Feature Guide References

2.1.2.2 Internal Call Block
2.18.4 External Relay Control

13.5 PBX Configuration—[5-5] Optional Device—External Sensor

Settings related to external sensors can be programmed.
To assign destinations for sensor calls easily, click **Destination Setting** (see **2.1.6 Extension Number Setting**).
The **Shelf**, **Slot**, and **Port** for each item are displayed for your reference. For details, see **Common Programming Reference Items** in **9.1 PBX Configuration—[1-1] Configuration—Slot**.

◆ External Sensor No.

Indicates the number of the external sensor (reference only).

Value Range

1–8

Feature Guide References

2.18.3 External Sensor

◆ Name

Specifies the sensor name.

Value Range

Max. 20 characters

Feature Guide References

2.18.3 External Sensor

◆ Destination—Day, Lunch, Break, Night

Specifies the destination number of sensor calls for each port in each time mode.

Value Range

Max. 32 digits (consisting of 0–9, *, #, [ ] [Secret], and P [Pause])

Feature Guide References

2.18.3 External Sensor

◆ Tenant No.

Specifies the tenant to which the sensor belongs, to determine the Time Table for the sensor. (The tenant number corresponds to the Time Table number.)

Value Range

1–8

PC Programming Manual References

10.4 PBX Configuration—[2-4] System—Week Table

Feature Guide References

2.18.3 External Sensor
5.1.3 Tenant Service

◆ Sensor Alarm—Email notification

Enables e-mail notification when the sensor detects an alarm.

Value Range

Enable, Disable

Feature Guide References

2.18.3 External Sensor
5.1.3 Tenant Service

◆ Sensor Alarm—Email Address

Specifies the e-mail address that will receive a notification when the sensor detects an alarm.

Value Range

Max.128 characters

Feature Guide References

2.18.3 External Sensor
5.1.3 Tenant Service

◆ Sensor Alarm—Email Comment

Specifies comments in the e-mail received when the sensor detects an alarm.

Value Range

Max.256 characters

Feature Guide References

2.18.3 External Sensor
5.1.3 Tenant Service

Section 14

PBX Configuration—[6] Feature

This section serves as reference operating instructions for the Feature menu of the PBX Configuration menu of the Setup screen of Web Maintenance Console.

14.1 PBX Configuration—[6-1] Feature—System Speed Dial

The System Speed Dialling Table is used to store frequently dialled numbers as well as callers who should be automatically routed to certain extensions when they call (Calling Line Identification [CLI] distribution). The System Speed Dialling Table is available for all extension users when making or receiving a call.
In Basic Memory, a maximum of 1000 System Speed Dialling numbers (e.g., telephone numbers, feature numbers) can be programmed with other related parameters. 100 numbers are displayed at a time. To display other sets of numbers, click the applicable tab.

◆ Select Table

Selects the System Speed Dialling Table to be programmed. Whether a tenant uses the basic System Speed Dialling Table or the additional table depends on the setting of ◆ **System Speed Dial** in **14.6 PBX Configuration—[6-6] Feature—Tenant**.

Value Range

System: the standard table
Expansion for Tenant 1-8: additional tables

PC Programming Manual References

14.6 PBX Configuration—[6-6] Feature—Tenant—◆ System Speed Dial

Feature Guide References

2.6.4 Speed Dialling—Personal/System
2.19.1 Caller ID
5.1.3 Tenant Service

◆ Name

Specifies a name for the System Speed Dialling number.

Value Range

Max. 20 characters

Feature Guide References

2.6.4 Speed Dialling—Personal/System
2.19.1 Caller ID

◆ CO Line Access Number + Telephone Number

Specifies the telephone number (including the Trunk Access number) or feature number assigned to the System Speed Dialling number.

Value Range

Max. 32 digits (consisting of 0–9, *, #, T [Transfer], [ ] [Secret], P [Pause], and F [Flash])

Feature Guide References

2.6.4 Speed Dialling—Personal/System
2.19.1 Caller ID

◆ CLI Destination

Specifies the CLI destination (extension) to which incoming calls from the programmed telephone number are routed. If a Caller ID Modification Table is being used, the modified number must match the telephone number above (**CO Line Access Number + Telephone Number**) in order for the call to be routed correctly.

Value Range

Max. 5 digits (consisting of 0–9)

PC Programming Manual References

18.2 PBX Configuration—[10-2] CO & Incoming Call—DIL Table & Port Settings—CLI for DIL—◆ CLI Ring for DIL—Day, Lunch, Break, Night
18.3 PBX Configuration—[10-3] CO & Incoming Call—DDI / DID Table—◆ CLI Ring for DDI/DID—Day, Lunch, Break, Night

Feature Guide References

2.1.1.4 Calling Line Identification (CLI) Distribution
2.19.1 Caller ID

14.2 PBX Configuration—[6-2] Feature—Hotel & Charge

Various settings related to the hospitality features of the PBX can be set.

Main

◆ Hotel Operator—Extension 1–4

Specifies the numbers of the extensions designated as hotel operators.

Value Range

Max. 5 digits (consisting of 0–9)

Feature Guide References

2.23.1 Hospitality Features—SUMMARY
2.23.2 Room Status Control

◆ SMDR for External Hotel Application 1—Room Status Control

Selects whether check-in and check-out data is output on SMDR.

Value Range

No Print, Print

PC Programming Manual References

19.1 PBX Configuration—[11-1] Maintenance—Main

Feature Guide References

2.22.1.1 Station Message Detail Recording (SMDR)
2.23.2 Room Status Control

◆ SMDR for External Hotel Application 1—Timed Reminder (Wake-up Call)

Selects whether Timed Reminder data is output on SMDR.

Value Range

No Print, Print

PC Programming Manual References

19.1 PBX Configuration—[11-1] Maintenance—Main

Feature Guide References

2.22.1.1 Station Message Detail Recording (SMDR)
2.24.4 Timed Reminder

◆ SMDR for External Hotel Application 2—Printing Message 1–8

Specifies the text of the message output on SMDR when this Printing Message is selected from an extension. The "%" character can be used in a message, and requires a number to be entered in its place when the message is selected from an extension. This character can be used a maximum of seven times in a Printing Message.

Value Range

Max. 16 characters

PC Programming Manual References

19.1 PBX Configuration—[11-1] Maintenance—Main

Feature Guide References

2.22.1.1 Station Message Detail Recording (SMDR)
2.22.2 Printing Message

◆ Timed Reminder Message for SIP-MLT / Standard SIP Phone—Message

Specifies the message displayed on a SIP-MLT or Standard SIP Phone LCD screen for the Timed Reminder feature.

Value Range

Max. 20 characters

Feature Guide References

2.24.4 Timed Reminder

Bill

◆ Checkout Billing—Billing for Guest

Activates call billing features for the PBX.

Value Range

OFF, ON

PC Programming Manual References

9.2.2 PBX Configuration—[1-1] Configuration—Slot—System Property—Site

Feature Guide References

2.23.3 Call Billing for Guest Room

◆ Checkout Billing—LCD for "Telephone"

Specifies the name of charge item 1 as shown on the display of the hotel operator extension when entering room charges.

Value Range

Max. 12 characters

Feature Guide References

2.23.3 Call Billing for Guest Room

◆ Checkout Billing—LCD for "Minibar"

Specifies the name of charge item 2 as shown on the display of the hotel operator extension when entering room charges.

Value Range

Max. 12 characters

Feature Guide References

2.23.3 Call Billing for Guest Room

◆ Checkout Billing—LCD for "Others"

Specifies the name of charge item 3 as shown on the display of the hotel operator extension when entering room charges.

Value Range

Max. 12 characters

Feature Guide References

2.23.3 Call Billing for Guest Room

◆ Checkout Billing—Bill (SMDR) for "Telephone"

Specifies the name of charge item 1 as printed on the guest bill.

Value Range

Max. 12 characters

Feature Guide References

2.23.3 Call Billing for Guest Room

◆ Checkout Billing—Bill (SMDR) for "Minibar"

Specifies the name of charge item 2 as printed on the guest bill.

Value Range

Max. 12 characters

Feature Guide References

2.23.3 Call Billing for Guest Room

◆ Checkout Billing—Bill (SMDR) for "Others"

Specifies the name of charge item 3 as printed on the guest bill.

Value Range

Max. 12 characters

Feature Guide References

2.23.3 Call Billing for Guest Room

◆ SMDR for External Hotel Application—Language for Bill (SMDR)

Specifies the language used for standard items shown on guest bills printed out using the Call Billing feature.

Value Range

Language 1–Language 5

Feature Guide References

2.23.3 Call Billing for Guest Room

◆ SMDR for External Hotel Application—Header 1–3

Specifies the text printed at the top of the guest bill.

Value Range

Max. 80 characters

Feature Guide References

2.23.3 Call Billing for Guest Room

◆ SMDR for External Hotel Application—Footer 1–3

Specifies the text printed at the bottom of the guest bill.

Value Range

Max. 80 characters

Feature Guide References

2.23.3 Call Billing for Guest Room

Charge

◆ Margin & Tax—Margin Rate for "Telephone" (%)

Specifies the percentage margin to be added to telephone charges displayed on the guest bill.

Value Range

0.00–99.99 %

Feature Guide References

2.22.3 Call Charge Services
2.23.3 Call Billing for Guest Room

◆ Margin & Tax—Tax Rate for "Telephone" (%)

Specifies the percentage tax rate to be used when calculating guest telephone charges.

Value Range

0.00–99.99 %

Feature Guide References

2.23.3 Call Billing for Guest Room

◆ Margin & Tax—Tax Rate for "Minibar" (%)

Specifies the percentage tax rate to be used when calculating guest charges for charge item 2.

Value Range

0.00–99.99 %

Feature Guide References

2.23.3 Call Billing for Guest Room

◆ Margin & Tax—Tax Rate for "Others" (%)

Specifies the percentage tax rate to be used when calculating guest charges for charge item 3.

Value Range

0.00–99.99 %

Feature Guide References

2.23.3 Call Billing for Guest Room

◆ Charge Options—Digits After Decimal Point

Specifies the number of digits to display after the decimal point for the currency in use.

Value Range

0–6

PC Programming Manual References

12.1.1 PBX Configuration—[4-1-1] Extension—Wired Extension—Extension Settings—Option 3—◆ Charge Limit
12.2.1 PBX Configuration—[4-2-1] Extension—Portable Station—Extension Settings—Option 3—◆ Charge Limit
14.3 PBX Configuration—[6-3] Feature—Verification Code—◆ Budget Management

Feature Guide References

2.21.4 Display Information
2.22.3 Call Charge Services
2.23.3 Call Billing for Guest Room

◆ Charge Options—Currency

Specifies the currency characters shown on the display of the extension and the SMDR.

Value Range

Max. 3 characters

PC Programming Manual References

12.1.1 PBX Configuration—[4-1-1] Extension—Wired Extension—Extension Settings—Option 3—◆ Charge Limit
12.2.1 PBX Configuration—[4-2-1] Extension—Portable Station—Extension Settings—Option 3—◆ Charge Limit
14.3 PBX Configuration—[6-3] Feature—Verification Code—◆ Budget Management

Feature Guide References

2.21.4 Display Information
2.22.1.1 Station Message Detail Recording (SMDR)
2.22.3 Call Charge Services
2.23.3 Call Billing for Guest Room

◆ Charge Options—Currency Display Position

Specifies whether the currency characters are displayed before or after the call charge.

Value Range

Head, Tail

PC Programming Manual References

12.1.1 PBX Configuration—[4-1-1] Extension—Wired Extension—Extension Settings—Option 3—◆ Charge Limit
12.2.1 PBX Configuration—[4-2-1] Extension—Portable Station—Extension Settings—Option 3—◆ Charge Limit
14.3 PBX Configuration—[6-3] Feature—Verification Code—◆ Budget Management

Feature Guide References

2.22.3 Call Charge Services

◆ Charge Options—Action at Charge Limit

Selects what happens when the amount of the call charge reaches the pre-programmed limit during a conversation.

Value Range

Alarm: Only a warning tone is heard.
Alarm + Disconnect: A warning tone is heard, and then the call is disconnected.

PC Programming Manual References

12.1.1 PBX Configuration—[4-1-1] Extension—Wired Extension—Extension Settings—Option 3—◆ Charge Limit
12.2.1 PBX Configuration—[4-2-1] Extension—Portable Station—Extension Settings—Option 3—◆ Charge Limit

Feature Guide References

2.7.2 Budget Management

◆ Charge Options—Meter Start on Answer Detection

Enables the PBX to start counting the call charge when the answer signal from the telephone company is detected.

Value Range

Disable, Enable

PC Programming Manual References

12.1.1 PBX Configuration—[4-1-1] Extension—Wired Extension—Extension Settings—Option 3—◆ Charge Limit
12.2.1 PBX Configuration—[4-2-1] Extension—Portable Station—Extension Settings—Option 3—◆ Charge Limit

Feature Guide References

2.22.3 Call Charge Services

14.3 PBX Configuration—[6-3] Feature—Verification Code

A verification code is used to override the Toll Restriction (TRS)/Call Barring (Barring) of the extension in use to make a certain trunk call, or to identify the call for accounting and billing purposes.
A maximum of 1000 verification codes can be programmed with other related parameters. 100 codes are displayed at a time. To display other sets of codes, click the applicable tab.

◆ Verification Code

Specifies the verification code.

Value Range

Max. 4 digits (consisting of 0–9, *, and #)

Feature Guide References

2.7.6 Verification Code Entry

◆ User Name

Specifies the user name assigned to the verification code.

Value Range

Max. 20 characters

Feature Guide References

2.7.6 Verification Code Entry

◆ Verification Code PIN

Specifies the PIN to be entered when making a trunk call with the verification code.

CAUTION

There is a risk that fraudulent telephone calls will be made if a third party discovers a personal identification number (PIN) (verification code PIN or extension PIN) of the PBX.
The cost of such calls will be billed to the owner/renter of the PBX.
To protect the PBX from this kind of fraudulent use, we strongly recommend:

a. Keeping PINs secret.
b. Selecting complex, random PINs that cannot be easily guessed.
c. Changing PINs frequently.

Value Range

Max. 10 digits (consisting of 0–9)

Feature Guide References

2.7.6 Verification Code Entry

◆ COS Number

Specifies the COS that applies when making a trunk call with the verification code.

Value Range

1–64

PC Programming Manual References

10.7.1 PBX Configuration—[2-7-1] System—Class of Service—COS Settings

Feature Guide References

2.7.6 Verification Code Entry
5.1.1 Class of Service (COS)

◆ Itemised Billing Code for ARS

Specifies the itemised billing code used by the ARS feature for identifying calls made with a verification code for accounting and billing purposes.

Value Range

Max. 10 digits (consisting of 0–9, *, and #)

PC Programming Manual References

16.5 PBX Configuration—[8-5] ARS—Carrier

Feature Guide References

2.8.1 Automatic Route Selection (ARS)

◆ Budget Management

Specifies the limit of the call charge that will be counted on the verification code.
The number of decimal places that can be specified here depends on the value set in ◆ **Charge Options—Digits After Decimal Point** in **14.2 PBX Configuration—[6-2] Feature—Hotel & Charge**.

Value Range

0–9999999

Feature Guide References

2.7.2 Budget Management

14.4 PBX Configuration—[6-4] Feature—Second Dial Tone

A programmed Pause time can be inserted automatically between the Second Dial Tone Waiting code and the following digits. When a programmed Second Dial Tone Waiting code is dialled after seizing a trunk, a pre-programmed number of pauses are inserted after the code.
A maximum of 100 Second Dial Tone Waiting codes can be programmed. 20 codes are displayed at a time. To display other sets of codes, click the applicable tab.

◆ Second Dial Tone Waiting Code

Specifies the Second Dial Tone Waiting code.

Value Range

Max. 4 digits (consisting of 0–9, *, and #)

Feature Guide References

2.5.4.7 Pause Insertion

◆ Pause Repeating Counter

Specifies the number of pauses to be inserted when waiting for the second dial tone.

Value Range

0–20

Feature Guide References

2.5.4.7 Pause Insertion

14.5 PBX Configuration—[6-5] Feature—Absent Message

When a display PT user calls an extension, a message is shown on the caller's telephone display describing the reason for absence. A maximum of 8 Absent Messages can be programmed, and any extension user can select one of them.

Note

When using this feature in conjunction with the Unified Messaging (UM) system, changing a message here will create a difference between the displayed message and the UM's pre-recorded greeting that corresponds to the absent message. To use both features in synchronisation, you must record a corresponding greeting for each absent message changed. For details about changing UM system prompts, see **7.9 Utility—UM – System Prompts Customisation**.

◆ Absent Message

Specifies the message for display.

Value Range

Max. 16 characters

Feature Guide References

2.20.2 Absent Message

14.6 PBX Configuration—[6-6] Feature—Tenant

A maximum of 8 tenants can share the PBX. Each tenant is composed of specified extension user groups. The PBX offers each tenant its own Time Table and system resources.
To assign extensions as operators easily, click **Extension No. Setting** (see **2.1.6 Extension Number Setting**).

◆ Music On Hold

Specifies the audio source to be used for Music on Hold.

Value Range

Same as System Setting, BGM1, BGM2, BGM3, BGM4, BGM5, BGM6, BGM7, BGM8, Tone

PC Programming Manual References

10.2 PBX Configuration—[2-2] System—Operator & BGM

Feature Guide References

2.13.4 Music on Hold
5.1.3 Tenant Service

◆ Operator (Extension Number)

Specifies the extension number or the floating extension number of an incoming call distribution group to be designated as the tenant operator. When this parameter is left unspecified, the PBX operator serves as the tenant operator.

Value Range

Max. 5 digits (consisting of 0–9)

PC Programming Manual References

10.2 PBX Configuration—[2-2] System—Operator & BGM

Feature Guide References

5.1.3 Tenant Service
5.1.5 Operator Features

◆ ARS Mode

Specifies the ARS mode used when making a trunk call.

Value Range

Off: ARS is disabled.
On for Local Access Operation: ARS operates when an extension user makes a call using any Idle Line Access method.
On for Any CO Access Operation: ARS operates when an extension user makes a call using any Trunk Access method.

Same as System Setting: The setting specified in ◆ **ARS Mode** in **16.1 PBX Configuration—[8-1] ARS—System Setting** is applied.

PC Programming Manual References

16.1 PBX Configuration—[8-1] ARS—System Setting

Feature Guide References

2.8.1 Automatic Route Selection (ARS)
5.1.3 Tenant Service

◆ System Speed Dial

Specifies which system speed dialling table is used by the tenant.

Value Range

Same as System Setting: PBX common system speed dialling numbers are used.
Tenant Exclusive: Individual tenant system speed dialling numbers are used.

PC Programming Manual References

14.1 PBX Configuration—[6-1] Feature—System Speed Dial

Feature Guide References

2.6.4 Speed Dialling—Personal/System
5.1.3 Tenant Service

◆ Extension Directory

Specifies whether the display for the Speed Dialling numbers is for the entire system, or only for the extensions of the tenant group that the extension belongs to.

Value Range

System: All system Speed Dialling numbers are displayed.
Tenant: Only the extensions of the tenant group that the extension belongs to are displayed.

Feature Guide References

2.6.4 Speed Dialling—Personal/System
5.1.3 Tenant Service

Section 15

PBX Configuration—[7] TRS

This section serves as reference operating instructions for the TRS menu of the PBX Configuration menu of the Setup screen of Web Maintenance Console.

15.1 PBX Configuration—[7-1] TRS—Denied Code

Toll Restriction (TRS)/Call Barring (Barring) prohibits an extension from making certain trunk calls. Each time mode of every COS is assigned one of the seven TRS/Barring levels. TRS/Barring level 7 provides the maximum restriction (all trunk calls are prohibited) and level 1 provides the minimum (all trunk calls are allowed). TRS/Barring levels 2–6 are used to restrict calls according to the combination of denied codes here and excepted codes in **15.2 PBX Configuration—[7-2] TRS—Exception Code**. If the leading digits of the dialled number are not found in the applicable Denied Code tables, the call is made.
A maximum of 100 denied codes can be programmed for each level. 20 codes are displayed at a time. To display other sets of codes, click the applicable tab.

◆ Level 2–Level 6

Specifies the leading digits of toll restricted numbers for each level.

Value Range

Max. 16 digits (consisting of 0–9, *, #, and X)

PC Programming Manual References

10.7.1 PBX Configuration—[2-7-1] System—Class of Service—COS Settings—TRS—◆ TRS Level—Day, Lunch, Break, Night
15.2 PBX Configuration—[7-2] TRS—Exception Code

Feature Guide References

2.7.1 Toll Restriction (TRS)/Call Barring (Barring)

15.2 PBX Configuration—[7-2] TRS—Exception Code

Toll Restriction (TRS)/Call Barring (Barring) prohibits an extension from making certain trunk calls. Each time mode of every COS is assigned one of the seven TRS/Barring levels. TRS/Barring level 7 provides the maximum restriction (all trunk calls are prohibited) and level 1 provides the minimum (all trunk calls are allowed). TRS/Barring levels 2–6 are used to restrict calls according to the combination of denied codes in **15.1 PBX Configuration—[7-1] TRS—Denied Code** and excepted codes here. A call denied by the applicable Denied Code tables is checked against the applicable Exception Code tables, and if a match is found, the call is made.
A maximum of 100 exception codes can be programmed for each level. 20 codes are displayed at a time. To display other sets of codes, click the applicable tab.

◆ Level 2–Level 6

Specifies the leading digits of the numbers to be exempted from toll restriction/call barring for each level.

Value Range

Max. 16 digits (consisting of 0–9, *, #, and X)

PC Programming Manual References

10.7.1 PBX Configuration—[2-7-1] System—Class of Service—COS Settings—TRS—◆ TRS Level—Day, Lunch, Break, Night
15.1 PBX Configuration—[7-1] TRS—Denied Code

Feature Guide References

2.7.1 Toll Restriction (TRS)/Call Barring (Barring)

15.3 PBX Configuration—[7-3] TRS—Special Carrier

If the PBX has access to multiple telephone companies, a Special Carrier Access Code is required each time a trunk call is made. By programming these Special Carrier Access Codes here, Toll Restriction (TRS)/Call Barring (Barring) can restrict or allow calls to be made by ignoring the codes and looking at the telephone number only. If a Special Carrier Access Code is found in the dialled number, TRS/Barring will look only at the following digits.
A maximum of 100 Special Carrier Access Codes can be programmed.

◆ Special Carrier Access Code

Specifies a Special Carrier Access Code. Special Carrier Access Codes and Host PBX Access codes should be unique.

Value Range

Max. 16 digits (consisting of 0–9, *, and #)

Feature Guide References

2.5.4.9 Special Carrier Access Code
2.7.1 Toll Restriction (TRS)/Call Barring (Barring)

15.4 PBX Configuration—[7-4] TRS—Emergency Dial

Any extension user can dial the programmed emergency numbers at any time after seizing a trunk. The restrictions imposed on the extension, such as Toll Restriction (TRS)/Call Barring (Barring), Account Code—Forced mode, and Extension Dial Lock are disregarded.
A maximum of 10 emergency numbers can be programmed.

◆ Emergency Number

Specifies the numbers used for making emergency calls. It is not necessary to start the emergency number with a Trunk Access number.

Value Range

Max. 32 digits (consisting of 0–9, *, #, T [Transfer], P [Pause], and F [Flash])

Feature Guide References

2.5.4.2 Emergency Call

15.5 PBX Configuration—[7-5] TRS—Miscellaneous

Toll Restriction (TRS)/Call Barring (Barring) prohibits an extension from making certain trunk calls. The following optional settings can be programmed to activate a TRS/Barring check, override TRS/Barring, or switch between TRS/Barring methods.

◆ TRS Override by System Speed Dialling

Enables an outgoing trunk call to override TRS/Barring when the call is made using System Speed Dialling.

Value Range

Disable, Enable

PC Programming Manual References

14.1 PBX Configuration—[6-1] Feature—System Speed Dial

Feature Guide References

2.7.1 Toll Restriction (TRS)/Call Barring (Barring)

◆ TRS Check for Dial " * # "

Enables a TRS/Barring check for the user-dialled "＊" and "#". This is useful in preventing unauthorised calls which could possibly be made through certain telephone company exchanges.

Value Range

No Check, Check

Feature Guide References

2.7.1 Toll Restriction (TRS)/Call Barring (Barring)

◆ Mode when Dial Time-out before TRS Check

Selects whether a trunk is disconnected if the TRS/Barring check has not been completed when the trunk Inter-digit timer expires.

Value Range

Disconnect: The trunk is disconnected as soon as the timer expires.
Keep: The TRS/Barring check is performed when the timer expires.

PC Programming Manual References

10.3 PBX Configuration—[2-3] System—Timers & Counters

Feature Guide References

2.7.1 Toll Restriction (TRS)/Call Barring (Barring)

◆ Dial Digits Limitation After Answering—Dial Digits

Specifies a limit to be placed on the number of digits which can be dialled after an extension user receives a trunk call. If the number of dialled digits exceeds the programmed limit, the line will be disconnected.

Value Range

None, 1–7

Feature Guide References

2.7.1 Toll Restriction (TRS)/Call Barring (Barring)
2.11.8 Trunk Call Limitation

◆ TRS Check after EFA

Enables TRS/Barring to check the digits dialled after External Feature Access (EFA) during a trunk call.

Value Range

Disable, Enable

Feature Guide References

2.7.1 Toll Restriction (TRS)/Call Barring (Barring)
2.11.7 External Feature Access (EFA)

◆ TRS Table Mode for Level N (N=2_6)

Selects the method of TRS/Barring to be used for restricting calls. The level of TRS/Barring is determined by the telephone codes set in the Denied Code Tables and Exception Code Tables.

Value Range

Deny Table 2_N + Except Table N_6: The Denied Code Tables for the higher levels are applied to all levels below it, and the Exception Code Tables for the lower levels are applied to all levels above it.
Deny Table N + Except Table N: Each level has its own separate set of denied codes and exception codes, which are only applied to that level.

Feature Guide References

2.7.1 Toll Restriction (TRS)/Call Barring (Barring)

Section 16

PBX Configuration—[8] ARS

This section serves as reference operating instructions for the ARS menu of the PBX Configuration menu of the Setup screen of Web Maintenance Console.

16.1 PBX Configuration—[8-1] ARS—System Setting

Automatic Route Selection (ARS) automatically selects the appropriate carrier at the time a trunk call is made, according to the programmed settings. The user-dialled number will be checked and modified in order to connect it to the appropriate carrier.

◆ ARS Mode

Selects the condition to determine when to operate ARS.

Value Range

Off: ARS is disabled.
On for Local Access Operation: ARS operates when an extension user makes a call using Idle Line Access method.
On for Any CO Access Operation: ARS operates when an extension user makes a call using Idle Line Access, Trunk Access, or S-CO Line Access method.

Feature Guide References

2.5.5.3 Trunk Access
2.8.1 Automatic Route Selection (ARS)

◆ Mode When Any Carrier is not programmed for the Dial

Selects what happens when the dialled number is not found in ◆ **Leading Number** in **16.2 PBX Configuration—[8-2] ARS—Leading Number**.

Value Range

Disconnect: the line will be disconnected.
Local Access: the dialled number will be handled by Idle Line Access method.

Feature Guide References

2.8.1 Automatic Route Selection (ARS)

16.2 PBX Configuration—[8-2] ARS—Leading Number

Specifies the area codes and/or telephone numbers as leading numbers that will be routed by the ARS feature. A maximum of 1000 different leading numbers can be programmed, and each leading number can select a Routing Plan Table number, which determines the ARS procedure.
The additional (remaining) number of digits can also be specified for each leading number. The additional (remaining) number of digits must be specified only when "#", for example, is needed after the dialled number. The "#" will be added after the programmed number of digits of the user-dialled number (excluding the leading number).
100 leading numbers are displayed at a time. To display other sets of leading numbers, click the applicable tab.

◆ Leading Number

Specifies the leading number.

Value Range

Max. 16 digits (consisting of 0–9, *, #, and X)

Feature Guide References

2.8.1 Automatic Route Selection (ARS)

◆ Additional Number of Digits

Specifies the additional (remaining) number of digits following each leading number.

Value Range

0–15

Feature Guide References

2.8.1 Automatic Route Selection (ARS)

◆ Routing Plan Number

Specifies the Routing Plan Table number used for each leading number.

Value Range

1–48

Feature Guide References

2.8.1 Automatic Route Selection (ARS)

16.3 PBX Configuration—[8-3] ARS—Routing Plan Time

The start and end times of a maximum of 4 different time blocks are shown for each day of the week. There are 48 Routing Plan Tables, and each Routing Plan Table can have its own time blocks. Select the desired Routing Plan Table number from the **Routing Plan** list.

- To adjust the currently displayed Routing Plan, click and drag the divisions between two time periods.
- To programme the time blocks of the currently displayed Routing Plan, including adding or deleting time blocks, click **Time Setting**.

16.3.1 PBX Configuration—[8-3] ARS—Routing Plan Time—Time Setting

The start times of a maximum of 4 different time blocks can be programmed for each day of the week, for the selected Routing Plan. Each time block automatically ends when the subsequent block begins.

◆ Time-A–D—Setting

Enables the setting of the start time for each time block.

Value Range

Disable, Enable

Feature Guide References

2.8.1 Automatic Route Selection (ARS)

◆ Time-A–D—Hour, Minute

Specifies the start time for each time block.

Note

Time-A must be the earliest block in the day, and the following blocks must be set in chronological order.

Correct programming example:
Time-A: 8:00
Time-B: 17:00
Time-C: 21:00

Incorrect programming example:
Time-A: 8:00
Time-B: 13:00
Time-C: 11:30
Time-D: 17:00

Value Range

00:00–23:59

Feature Guide References

2.8.1 Automatic Route Selection (ARS)

16.4 PBX Configuration—[8-4] ARS—Routing Plan Priority

The carrier priority (1 through 6) in a Routing Plan Table can be programmed for each time zone of each day of the week. Select the desired Routing Plan Table number from the **Routing Plan** list. Select the desired day of the week by clicking the applicable tab.

◆ Time-A–Time-D

Specifies the carrier to be given priority for each time zone.

Value Range

None, 1–48

Feature Guide References

2.8.1 Automatic Route Selection (ARS)

16.5 PBX Configuration—[8-5] ARS—Carrier

Carrier

It is possible to specify how user-dialled numbers are modified for connecting to the appropriate carrier. A maximum of 48 different carriers can be programmed to be used with the ARS feature.

◆ Carrier Name

Specifies the carrier name.

Value Range

Max. 20 characters

Feature Guide References

2.8.1 Automatic Route Selection (ARS)

◆ Removed Number of Digits

Specifies the number of leading digits to remove from the user-dialled number.

Value Range

0–15

Feature Guide References

2.8.1 Automatic Route Selection (ARS)

◆ Modify Command

Specifies the commands to modify the user-dialled number to access the carrier. For details of each command, see the Feature Guide.

Value Range

Max. 16 characters (consisting of 0–9, *, #, C, P, A, G, I and H)

Feature Guide References

2.8.1 Automatic Route Selection (ARS)

◆ CLIP Table No.

Sets the CLIP numbers established for each extension (wired/wireless) of a carrier. The CLIP IDs for each CLIP number are set in **12.1.7 PBX Configuration—[4-1-7] Extension—Wired Extension—CLIP ID Table** and **12.2.5 PBX Configuration—[4-2-5] Extension—Portable Station—CLIP ID Table**.

Value Range

1–8

Feature Guide References

2.8.1 Automatic Route Selection (ARS)

◆ Carrier Access Code

Specifies the carrier access code. The carrier access code can be added to the user-dialled number by specifying "C" in ◆ **Modify Command** on this screen.

Value Range

Max. 32 digits (consisting of 0–9, *, #, and P [Pause])

Feature Guide References

2.8.1 Automatic Route Selection (ARS)

TRG Priority

Selects the order in which trunk groups are seized when making calls via each carrier.

◆ Trunk Group—Priority 1–Priority 4

Specifies which trunk group is seized in the order of priority 1 to priority 4.

Value Range

None, 1–64

Feature Guide References

2.8.1 Automatic Route Selection (ARS)

TRG 01–TRG 64

Selects the trunk groups that connect to the carrier.

◆ TRG 01–TRG 64

Enables each trunk group for each carrier. If a cell is highlighted in blue, that trunk group is enabled for use with that carrier.

Value Range

OFF (white), ON (blue)

Feature Guide References

2.8.1 Automatic Route Selection (ARS)

Authorisation Code for Tenant

Specifies an Authorisation code for each tenant. The Authorisation codes can be added to the user-dialled number by specifying "A" command in ◆ **Modify Command** on the **Carrier** tab.

◆ Authorisation Code for Tenant—Tenant 1–Tenant 8

Specifies the Authorisation code of each carrier for each tenant.

Value Range

Max. 16 digits (consisting of 0–9, *, and #)

Feature Guide References

2.8.1 Automatic Route Selection (ARS)
5.1.3 Tenant Service

16.6 PBX Configuration—[8-6] ARS—Leading Number Exception

Specifies telephone numbers that will not be connected using the ARS feature. When the user-dialled number includes a leading number exception, the PBX sends the number to a trunk by the Idle Line Access method if ◆ **ARS Mode** in **16.1 PBX Configuration—[8-1] ARS—System Setting** is "on".
A maximum of 200 different leading number exceptions can be programmed. 20 leading number exception entries are displayed on the screen at a time. To display other sets, click the applicable tab.

◆ Leading Number Exception

Specifies the leading number exception.

Value Range

Max. 16 digits (consisting of 0–9, *, #, and X)

Feature Guide References

2.8.1 Automatic Route Selection (ARS)

16.7 PBX Configuration—[8-7] ARS—Authorisation Code for TRG

An Authorisation code can be specified for each trunk group. The Authorisation codes entered here can be added to user-dialled numbers by adding "G" to the ◆ **Modify Command** specified on the **Carrier** tab of screen **16.5 PBX Configuration—[8-5] ARS—Carrier**.
8 trunk groups are displayed on the screen at a time. To display other groups, click the applicable tab.

◆ TRG—TRG 01–TRG 64

Specifies the Authorisation code of each carrier for each trunk group.

Value Range

Max. 10 digits (consisting of 0–9, *, and #)

PC Programming Manual References

16.5 PBX Configuration—[8-5] ARS—Carrier—Carrier—◆ Modify Command

Feature Guide References

2.8.1 Automatic Route Selection (ARS)

Section 17

PBX Configuration—[9] Private Network

This section serves as reference operating instructions for the Private Network menu of the PBX Configuration menu of the Setup screen of Web Maintenance Console.

17.1 PBX Configuration—[9-1] Private Network—TIE Table

A TIE line is a privately leased communication line between two or more PBXs, which provides cost effective communications between company members at different locations.
A maximum of 32 TIE Line Routing and Modification Tables can be programmed. It is necessary to make unified tables with all PBXs at different locations in a TIE line network in order to identify the trunk route to be used when an extension makes or receives a TIE line call.
There are two types of routing methods: the Extension Number Method, where all extensions in the network are given a unique extension number; and the PBX Code Method, where each PBX is given a unique code, which is dialled before the extension number to call an extension at another PBX.
Two priority sets (from a total of 8) are displayed at a time. To display other priority sets, click the applicable tab.
Using a private network, up to 8 PBXs can share one voice mail system (centralised VM) connected to another PBX. This can provide voice mail for extensions attached to any of the PBXs in the network.

◆ Own PBX Code

Specifies the PBX code of the local PBX, when using PBX Code Method numbering on a TIE line network. If this cell is left empty, the Extension Number Method is used.

Value Range

Max. 7 digits (consisting of 0–9)

Feature Guide References

4.2.1 TIE Line Service

Priority 1–Priority 8

◆ Leading Number

Specifies the leading number for other PBX extension numbers or the PBX code of others in the TIE line network.

Value Range

Max. 3 digits (consisting of 0–9, *, and #)

Feature Guide References

4.2.1 TIE Line Service

◆ Removed Number of Digits

Specifies the number of leading digits of the dialled number to be removed for each priority.

Value Range

0–15

Feature Guide References

4.2.1 TIE Line Service

◆ Added Number

Specifies the number to be added to the dialled number in place of the removed digits for each priority.

Value Range

Max. 32 digits (consisting of 0–9, *, #, and P [Pause])

Feature Guide References

4.2.1 TIE Line Service

◆ Trunk Group

Specifies the trunk group to be used for TIE line calls for each priority.

Value Range

None, 1–64

Feature Guide References

4.2.1 TIE Line Service

Enhanced QSIG

◆ Leading Number

Specifies the leading number for other PBX extension numbers or the PBX code of other PBXs in the TIE line network.

Value Range

Max. 3 digits (consisting of 0–9, *, and #)

Feature Guide References

4.2.5 QSIG Enhanced Features

◆ Enhanced QSIG Call Information (Activation Key Required)

Enables Network Message Waiting information to be sent from the PBX to which the voice mail system is attached to extensions connected to other PBXs in the network.

Value Range

Disable, Enable

Feature Guide References

4.2.5 QSIG Enhanced Features

17.2 PBX Configuration—[9-2] Private Network—Network Data Transmission

Settings related to the transmission of extension BLF (Busy Line Field) data or Message Waiting notifications over a network of PBXs can be programmed.
Extension BLF data is used to show the status of a monitored extension attached to another PBX on a Network DSS (NDSS) button. Network Message Waiting notifications are used for the Centralised VM feature, and a voice mail system can send notifications to extensions connected to any PBX in the network.

◆ Network Data Transmission for Centralised Operator Feature—Network PBX ID

Specifies the Network ID of the PBX, for Network Direct Station Selection (NDSS). This parameter must be set in correspondence with the Network IDs assigned to other PBXs in the network.
Network IDs 1-8 can only be assigned to one PBX each within a network. Assigning the same Network ID to two PBXs will cause network data transmission problems.
Changing this value in On-line mode will automatically clear any NDSS Link Data.

Value Range

0: The PBX retransmits BLF data sent by other PBXs.
1: The PBX receives BLF data sent by other PBXs.
2–8: The PBX transmits BLF data over the network.

Feature Guide References

4.2.5.1 Network Direct Station Selection (NDSS)

◆ Network Data Transmission for Centralised Operator Feature—Data Transmission VoIP->ISDN

Selects whether to re-send BLF data received from a VoIP port through any ISDN ports that are set to transmit BLF data.

Value Range

Disable, Enable

PC Programming Manual References

9.26 PBX Configuration—[1-1] Configuration—Slot—Port Property - PRI Port—CO Setting—◆ Networking Data Transfer

Feature Guide References

4.2.5.1 Network Direct Station Selection (NDSS)

◆ Network Data Transmission for Centralised Operator Feature—Data Transmission ISDN->VoIP

Selects whether to re-send BLF data received from an ISDN port through any VoIP ports that are set to transmit BLF data.

Value Range

Disable, Enable

PC Programming Manual References

17.3 PBX Configuration—[9-3] Private Network—Network Operator (VoIP)—◆ IP-GW Card Slot No. to notify BLF data to Network Operator

Feature Guide References

4.2.5.1 Network Direct Station Selection (NDSS)

◆ Network Data Transmission for Centralised Operator Feature—Data Transmission Counter

Specifies the maximum number of "hops", or transmissions between two PBXs, before a packet of BLF data is discarded.

Value Range

1–63

Feature Guide References

4.2.5.1 Network Direct Station Selection (NDSS)

◆ Network Data Transmission for Centralised Operator Feature—Data Broadcasting Interval Timer

Specifies the frequency of BLF data transmission. The PBX will send data over the network periodically according to the interval specified here.

Value Range

100 × n (n=0–30) ms

Feature Guide References

4.2.5.1 Network Direct Station Selection (NDSS)

◆ Network MSW Data Transmission for Centralised VM Feature—Data Re-transmission : Repeat Counter

Specifies the number of times re-transmission of network message waiting notifications is repeated before being cancelled.

Value Range

0–10

PC Programming Manual References

17.1 PBX Configuration—[9-1] Private Network—TIE Table—◆ Enhanced QSIG Call Information (Activation Key Required)

Feature Guide References

4.2.5.2 Centralised Voice Mail

◆ Network MSW Data Transmission for Centralised VM Feature—Data Re-transmission : Repeat Timer

Specifies the length of time between repeated re-transmission of network message waiting notifications.

Value Range

10–240 s

PC Programming Manual References

17.1 PBX Configuration—[9-1] Private Network—TIE Table—◆ Enhanced QSIG Call Information (Activation Key Required)

Feature Guide References

4.2.5.2 Centralised Voice Mail

17.3 PBX Configuration—[9-3] Private Network—Network Operator (VoIP)

This screen allows network operators to be programmed. A network operator is an extension at a remote PBX that will monitor other PBX extensions using Network Direct Station Selection (NDSS). The settings on this screen should be programmed at the PBX that is to be monitored (◆ Network Data Transmission for Centralised Operator Feature—Network PBX ID 2–8). Up to 8 network operators can be programmed.

◆ Network Operator Extension No.

Specifies the number of an extension at the monitor PBX (the PBX whose ◆ **Network Data Transmission for Centralised Operator Feature—Network PBX ID** is set to **1** in **17.2 PBX Configuration—[9-2] Private Network—Network Data Transmission**). Any extension at the monitor PBX can be specified here.

Value Range

Max. 16 digits (consisting of 0–9, *, and #)

PC Programming Manual References

17.2 PBX Configuration—[9-2] Private Network—Network Data Transmission—◆ Network Data Transmission for Centralised Operator Feature—Network PBX ID

Feature Guide References

4.2.5.1 Network Direct Station Selection (NDSS)

◆ IP-GW Card Slot No. to notify BLF data to Network Operator

Specifies the slot number of the card used to send extension status data. This setting is only required when using VoIP to transmit data.

Value Range

Undefined, 1 – 4, 1 – 5, 2 – 2, 2 – 3, 3 – 2, 3 – 3, 4 – 2, 4 – 3, Virtual – 1, Virtual – 2, Virtual – 3, Virtual – 4

PC Programming Manual References

9.1 PBX Configuration—[1-1] Configuration—Slot

Feature Guide References

4.2.5.1 Network Direct Station Selection (NDSS)

17.4 PBX Configuration—[9-4] Private Network—NDSS Key Table

Extensions at up to 7 other PBXs that will be monitored using Network Direct Station Selection (NDSS) can be registered. A maximum of 250 extensions can be registered. To create an NDSS button to monitor an extension, the extension must be registered here first.
To clear NDSS link data, click the **NDSS Clear** button. The **NDSS Clear** button can be used only in On-line mode.
Note that the parameters on this screen can only be set when the ◆ Network Data Transmission for Centralised Operator Feature—Network PBX ID is set to **1** in the **17.2 PBX Configuration—[9-2] Private Network—Network Data Transmission** screen.

◆ Network Extension No.

Specifies the number of the remote extension (attached to another PBX) that will be monitored. The number input here can use either Extension Number Method or PBX Code Method.

Value Range

Max. 16 digits (consisting of 0–9, *, and #)

Feature Guide References

4.1 Public Network Features—4.2.1 TIE Line Service
4.2.5.1 Network Direct Station Selection (NDSS)

◆ Network Extension Name for Programming Reference

Specifies the name of the network extension. This name is only shown here, not on the displays of extensions.

Value Range

Max. 20 characters

Feature Guide References

4.2.5.1 Network Direct Station Selection (NDSS)

◆ Network PBX ID of Network Extension to be monitored

Indicates the ◆ Network Data Transmission for Centralised Operator Feature—Network PBX ID of the PBX that the extension is connected to (reference only).

Value Range

None, 1–8

PC Programming Manual References

17.2 PBX Configuration—[9-2] Private Network—Network Data Transmission—◆ Network Data Transmission for Centralised Operator Feature—Network PBX ID

Feature Guide References

4.2.5.1 Network Direct Station Selection (NDSS)

17.5 PBX Configuration—[9-5] Private Network—Centralised UM/VM Unit

View and programme settings for using the Unified Messaging system and VPSs in a private network. To view a list of all programmed extension numbers and types, click **Extension List View** (see **6.4 Tool—Extension List View**).

◆ Unit No.

Indicates the unit number of the UM system or VM unit, as assigned by the PBX (reference only).

Value Range

Unit No.

◆ Floating Extension No. (TIE)

Specifies the floating extension number of the centralised UM or VM (VPS) group. This floating extension number must start with the number used to access a TIE line or the extensions of another PBX.

Value Range

Max. 8 digits (consisting of 0–9)

◆ Group Name (20 characters)

Specifies the name of the centralised UM or VM (VPS) group, which will be shown on the display of extensions that call it.

Value Range

Max. 20 Characters

Section 18

PBX Configuration—[10] CO & Incoming Call

This section serves as reference operating instructions for the CO & Incoming Call menu of the PBX Configuration menu of the Setup screen of Web Maintenance Console.

18.1 PBX Configuration—[10-1] CO & Incoming Call—CO Line Settings

Trunks can be assigned a name, and grouped into a maximum of 64 trunk groups.
The **Shelf**, **Slot**, and **Port** for each item are displayed for your reference. For details, see **Common Programming Reference Items** in **9.1 PBX Configuration—[1-1] Configuration—Slot**.

◆ Card Type

Indicates the type of card to which the trunk is connected (reference only).

Value Range

Card type

◆ CO Name

Specifies the trunk name which is shown on the extension's display when receiving a call from the trunk.

Value Range

Max. 20 characters

Feature Guide References

2.21.4 Display Information

◆ Trunk Group Number

Specifies the trunk group number to which the trunk belongs.
When a V-IPGW card is installed, the value is automatically set to "7" for the corresponding trunks.

Value Range

1–64

Feature Guide References

5.1.2 Group

18.2 PBX Configuration—[10-2] CO & Incoming Call—DIL Table & Port Settings

Direct In Line (DIL) or Direct Dialling In (DDI)/Direct Inward Dialling (DID) can be selected for each trunk as the method of distributing incoming trunk calls to certain destinations. For each trunk to which DIL distribution is set, different destinations can be programmed depending on the time mode (day/lunch/break/night). If desired, Calling Line Identification (CLI) distribution can be used in conjunction with DIL distribution.

DIL

For each trunk to which DIL distribution is set, different DIL destinations can be programmed depending on the time mode (day/lunch/break/night). Generally, DIL distribution is used for trunk calls from analogue trunks. Tenant number and service group number can also be programmed for each trunk.
To assign DIL destination numbers, enter directly or click **Destination Setting** (see **2.1.6 Extension Number Setting**).
The **Shelf**, **Slot**, and **Port** for each item are displayed for your reference. For details, see **Common Programming Reference Items** in **9.1 PBX Configuration—[1-1] Configuration—Slot**.

◆ Card Type

Indicates the trunk card type (reference only).

Value Range

Card type

Feature Guide References

2.1.1.1 Incoming Trunk Call Features—SUMMARY

◆ Trunk Property

Indicates the networking type of each trunk (reference only).

Value Range

Public, Private(TIE), VPN

Feature Guide References

2.1.1.1 Incoming Trunk Call Features—SUMMARY
4.2.1 TIE Line Service
4.2.3 ISDN Virtual Private Network (ISDN-VPN)

◆ Distribution Method

Selects the distribution method for incoming trunk calls. The value range of this setting depends on the card type and **Trunk Property** assigned for each trunk.

Value Range

DIL: Distribution depends on the trunk through which the calls arrive
DDI/DID: Distribution depends on the DDI/DID number of the calls

Feature Guide References

2.1.1.1 Incoming Trunk Call Features—SUMMARY

◆ DIL Destination—Day, Lunch, Break, Night

Specifies the DIL destination in each time mode.

Value Range

Max. 5 digits (consisting of 0–9)

PC Programming Manual References

10.6.1 PBX Configuration—[2-6-1] System—Numbering Plan—Main

Feature Guide References

2.1.1.2 Direct In Line (DIL)
4.2.1 TIE Line Service

◆ Tenant Number

Specifies the tenant number, to determine the Time Table by which calls are distributed depending on the time of day.

Value Range

1–8

Feature Guide References

2.1.1.2 Direct In Line (DIL)
5.1.3 Tenant Service
5.1.4 Time Service

◆ UM Service Group No.

Specifies the Service Group number sent to the Unified Messaging system when the incoming call destination is the floating extension number of a UM group.
The Service Group number is used to allow the Unified Messaging system to send the applicable greeting message to the caller.

Value Range

None, 1–64

Feature Guide References

2.1.1.2 Direct In Line (DIL)
3.2.1 System Features—3.2.1.39 Service Group

◆ VM Trunk Group No.

Specifies the number of the VM trunk group sent to the VPS when the incoming call destination is the floating extension number of a VM (DPT) Group. The VM trunk group number is used to allow the VPS to send the applicable greeting message to the caller.

Value Range

1–48

CLI for DIL

When CLI distribution is enabled for a trunk to which DIL distribution is set, incoming trunk calls will be distributed to the CLI destinations (instead of the DIL destinations) if the caller's identification number is found in the System Speed Dialling Table.
CLI distribution can be enabled or disabled for each time mode (day/lunch/break/night) on a trunk basis.
The **Shelf**, **Slot**, and **Port** for each item are displayed for your reference. For details, see **Common Programming Reference Items** in **9.1 PBX Configuration—[1-1] Configuration—Slot**.

◆ Card Type

Indicates the trunk card type (reference only).

Value Range

Card type

Feature Guide References

2.1.1.1 Incoming Trunk Call Features—SUMMARY

◆ Trunk Property

Indicates the networking type of each trunk (reference only).

Value Range

Public, Private(TIE), VPN

Feature Guide References

2.1.1.1 Incoming Trunk Call Features—SUMMARY
4.2.1 TIE Line Service
4.2.3 ISDN Virtual Private Network (ISDN-VPN)

◆ Distribution Method

Selects the distribution method for incoming trunk calls. The value range of this setting depends on the card type and **Trunk Property** assigned for each trunk.

Value Range

DIL: Distribution depends on the trunk through which the calls arrive
DDI/DID: Distribution depends on the DDI/DID number of the calls

Feature Guide References

2.1.1.1 Incoming Trunk Call Features—SUMMARY

◆ CLI Ring for DIL—Day, Lunch, Break, Night

Enables CLI distribution in each time mode.

Value Range

Disable, Enable

Feature Guide References

2.1.1.2 Direct In Line (DIL)
2.1.1.4 Calling Line Identification (CLI) Distribution

DDI/DID/TIE

For each trunk to which DDI/DID distribution is set, or for each trunk whose ◆ **Trunk Property** on this screen is **Private (TIE)**, modification parameters for DDI/DID number and TIE line call numbers can be programmed. The **Shelf**, **Slot**, and **Port** for each item are displayed for your reference. For details, see **Common Programming Reference Items** in **9.1 PBX Configuration—[1-1] Configuration—Slot**.

◆ Card Type

Indicates the trunk card type (reference only).

Value Range

Card type

Feature Guide References

2.1.1.1 Incoming Trunk Call Features—SUMMARY

◆ Trunk Property

Indicates the networking type of each trunk (reference only).

Value Range

Public, Private(TIE), VPN

Feature Guide References

2.1.1.1 Incoming Trunk Call Features—SUMMARY
4.2.1 TIE Line Service
4.2.3 ISDN Virtual Private Network (ISDN-VPN)

◆ Distribution Method

Selects the distribution method for incoming trunk calls. The value range of this setting depends on the card type and **Trunk Property** assigned for each trunk.

Value Range

DIL: Distribution depends on the trunk through which the calls arrive
DDI/DID: Distribution depends on the DDI/DID number of the calls

Feature Guide References

2.1.1.1 Incoming Trunk Call Features—SUMMARY
2.1.1.3 Direct Inward Dialling (DID)/Direct Dialling In (DDI)

◆ DDI/DID/TIE—Remove Digit

Specifies the number of leading digits to be removed from the incoming called number for DDI/DID distribution or for TIE line service.

Value Range

0–15

Feature Guide References

2.1.1.3 Direct Inward Dialling (DID)/Direct Dialling In (DDI)
4.2.1 TIE Line Service

◆ DDI/DID/TIE—Additional Dial

Specifies the number to be added to the incoming called number in the place of the removed digits for DDI/DID distribution or for TIE line service.

Value Range

Max. 8 digits (consisting of 0–9, *, and #)

Feature Guide References

2.1.1.3 Direct Inward Dialling (DID)/Direct Dialling In (DDI)
4.2.1 TIE Line Service

18.3 PBX Configuration—[10-3] CO & Incoming Call—DDI / DID Table

Incoming trunk calls with DDI/DID numbers can be distributed to specific destinations. Each DDI/DID number has a destination programmed for each time mode (day/lunch/break/night).
When CLI distribution is enabled for a DDI/DID number, incoming trunk calls with that DDI/DID number will be distributed to the CLI destinations (instead of the DDI/DID destinations) if the caller's identification number is found in the System Speed Dialling Table, which is used as the Caller ID Table. CLI distribution can be enabled or disabled for each time mode (day/lunch/break/night) on a DDI/DID number basis.
A maximum of 1000 DDI/DID numbers can be programmed with other related parameters. 100 numbers are displayed at a time. To display other sets of numbers, click the applicable tab.
To assign DDI/DID destination numbers, enter directly or click **Destination Setting** (see **2.1.6 Extension Number Setting**). It is possible to programme DDI/DID numbers and DDI/DID destinations in each time mode (day/lunch/break/night) for a set of locations in series at once by clicking **Automatic Registration**, or to programme DDI/DID names for a set of locations in series at once by clicking **Name Generate**.

◆ DDI / DID Number

Specifies the DDI/DID number.

Value Range

Max. 32 digits (consisting of 0–9, *, and #)

PC Programming Manual References

18.3.1 PBX Configuration—[10-3] CO & Incoming Call—DDI / DID Table—Automatic Registration

Feature Guide References

2.1.1.3 Direct Inward Dialling (DID)/Direct Dialling In (DDI)

◆ DDI / DID Name

Specifies the name for the DDI/DID number which is shown on the extension's display when receiving a call with the DDI/DID number. The name of the DDI/DID number can be printed out on SMDR.

Value Range

Max. 20 characters

PC Programming Manual References

18.3.2 PBX Configuration—[10-3] CO & Incoming Call—DDI / DID Table—Name Generate
19.1 PBX Configuration—[11-1] Maintenance—Main—SMDR Options—◆ Option—DDI/DID Number & Name

Feature Guide References

2.1.1.3 Direct Inward Dialling (DID)/Direct Dialling In (DDI)

◆ DDI / DID Destination—Day, Lunch, Break, Night

Specifies the DDI/DID destination in each time mode.

Value Range

Max. 5 digits (consisting of 0–9)

PC Programming Manual References

10.6.1 PBX Configuration—[2-6-1] System—Numbering Plan—Main
18.3.1 PBX Configuration—[10-3] CO & Incoming Call—DDI / DID Table—Automatic Registration

Feature Guide References

2.1.1.3 Direct Inward Dialling (DID)/Direct Dialling In (DDI)
4.2.1 TIE Line Service

◆ Tenant Number

Specifies the tenant number, to determine the Time Table by which calls are distributed depending on the time of day.

Value Range

1–8

PC Programming Manual References

10.4 PBX Configuration—[2-4] System—Week Table

Feature Guide References

2.1.1.3 Direct Inward Dialling (DID)/Direct Dialling In (DDI)

◆ UM Service Group No.

Specifies the Service Group number sent to the Unified Messaging system when the incoming call destination is the floating extension number of a UM group.
The Service Group number is used to allow the Unified Messaging system to send the applicable greeting message to the caller.

Value Range

None, 1–64

Feature Guide References

2.1.1.3 Direct Inward Dialling (DID)/Direct Dialling In (DDI)
3.1.1 Unified Messaging System Overview

◆ VM Trunk Group No.

Specifies the number of the VM trunk group sent to the VPS when the incoming call destination is the floating extension number of a VM (DPT) Group. The VM trunk group number is used to allow the VPS to send the applicable greeting message to the caller.

Value Range

1–48

◆ CLI Ring for DDI/DID—Day, Lunch, Break, Night

Enables CLI distribution in each time mode.

Value Range

Disable, Enable

PC Programming Manual References

14.1 PBX Configuration—[6-1] Feature—System Speed Dial

Feature Guide References

2.1.1.3 Direct Inward Dialling (DID)/Direct Dialling In (DDI)
2.1.1.4 Calling Line Identification (CLI) Distribution

18.3.1 PBX Configuration—[10-3] CO & Incoming Call—DDI / DID Table—Automatic Registration

Automatic Registration allows DDI/DID numbers and DDI/DID destinations in each time mode (day/lunch/break/night) to be programmed at once for a set of locations in series.

◆ Beginning Entry Location

Specifies the number of the first location to be programmed.

Value Range

1–1000

PC Programming Manual References

18.3 PBX Configuration—[10-3] CO & Incoming Call—DDI / DID Table

Feature Guide References

2.1.1.3 Direct Inward Dialling (DID)/Direct Dialling In (DDI)

◆ Generate DDI/DID Number (From)

Specifies the DID number of the first location to be programmed. DDI/DID numbers for subsequent locations will be generated automatically, by adding one to the value of the previous location.

Value Range

Max. 32 digits (consisting of 0–9)

PC Programming Manual References

18.3 PBX Configuration—[10-3] CO & Incoming Call—DDI / DID Table

Feature Guide References

2.1.1.3 Direct Inward Dialling (DID)/Direct Dialling In (DDI)

◆ Number of Registration

Specifies the number of locations to be programmed.

Value Range

1–1000

PC Programming Manual References

18.3 PBX Configuration—[10-3] CO & Incoming Call—DDI / DID Table

Feature Guide References

2.1.1.3 Direct Inward Dialling (DID)/Direct Dialling In (DDI)

◆ Destination—Day, Lunch, Break, Night

Specifies the number of the DDI/DID destination in each time mode for the first location to be programmed. If the same destination is to be used for all locations for a certain time mode, click the appropriate **Same all** check box. If the **Same all** check box for a certain time mode is not clicked, the destination numbers for subsequent locations will be generated automatically, by adding one to the value of the previous location for that time mode.

Value Range

Max. 5 digits (consisting of 0–9)

PC Programming Manual References

18.3 PBX Configuration—[10-3] CO & Incoming Call—DDI / DID Table

Feature Guide References

2.1.1.3 Direct Inward Dialling (DID)/Direct Dialling In (DDI)

18.3.2 PBX Configuration—[10-3] CO & Incoming Call—DDI / DID Table—Name Generate

Name Generate allows DDI/DID names to be programmed at once for a set of locations in series.
If a name generated here is longer than 20 characters, the additional characters will be discarded.

◆ Beginning Entry Location

Specifies the number of the first location to be programmed.

Value Range

1–1000

PC Programming Manual References

18.3 PBX Configuration—[10-3] CO & Incoming Call—DDI / DID Table

Feature Guide References

2.1.1.3 Direct Inward Dialling (DID)/Direct Dialling In (DDI)

◆ Number to Generate

Specifies the number of locations to be programmed.

Value Range

1–1000

PC Programming Manual References

18.3 PBX Configuration—[10-3] CO & Incoming Call—DDI / DID Table

Feature Guide References

2.1.1.3 Direct Inward Dialling (DID)/Direct Dialling In (DDI)

◆ No. of Digits to Delete

Specifies the number of digits to be deleted from the start of a DDI/DID number when using it as part of the DDI/DID name.

Value Range

0–32

PC Programming Manual References

18.3 PBX Configuration—[10-3] CO & Incoming Call—DDI / DID Table

Feature Guide References

2.1.1.3 Direct Inward Dialling (DID)/Direct Dialling In (DDI)

◆ Name Prefix

Specifies the text to be included at the start of each DDI/DID name.

Value Range

Max. 20 characters

PC Programming Manual References

18.3 PBX Configuration—[10-3] CO & Incoming Call—DDI / DID Table

Feature Guide References

2.1.1.3 Direct Inward Dialling (DID)/Direct Dialling In (DDI)

◆ Name Suffix

Specifies the text to be included at the end of each DDI/DID name.

Value Range

Max. 20 characters

PC Programming Manual References

18.3 PBX Configuration—[10-3] CO & Incoming Call—DDI / DID Table

Feature Guide References

2.1.1.3 Direct Inward Dialling (DID)/Direct Dialling In (DDI)

18.4 PBX Configuration—[10-5] CO & Incoming Call—Miscellaneous

The Intercept Routing feature can activate when the destination of an incoming call is unavailable, or when there is no destination for the call, to reroute the call to an alternate destination.

◆ Intercept—Intercept Routing - DND (Destination sets DND.)

Enables the Intercept Routing—DND feature to activate when the original destination is in DND mode.

Value Range

Disable (Busy Tone): Sends a busy tone to the caller. (However, a call through an LCOT card will ring at the original destination while the caller hears a ringback tone.)
Enable: Redirects the call to the intercept destination

Feature Guide References

2.1.1.5 Intercept Routing
2.3.3 Do Not Disturb (DND)

◆ Intercept—Routing to Operator - No Destination (Destination is not programmed.)

Enables the Intercept Routing—No Destination feature to activate when there is no destination for the call.

Value Range

Disable (Reorder Tone): Sends a reorder tone to the caller. (However, a call through an LCOT card will ring at the original destination while the caller hears a ringback tone.)
Enable: Redirects the call to an operator

Feature Guide References

2.1.1.6 Intercept Routing—No Destination

◆ Intercept—Intercept Routing for Extension Call

Enables the Intercept Routing feature to operate for extension calls.

Value Range

Disable, Enable

Feature Guide References

2.1.1.6 Intercept Routing—No Destination

Section 19

PBX Configuration—[11] Maintenance

This section serves as reference operating instructions for the Maintenance menu of the PBX Configuration menu of the Setup screen of Web Maintenance Console.

19.1 PBX Configuration—[11-1] Maintenance—Main

SMDR

Station Message Detail Recording (SMDR) automatically records detailed information about incoming and outgoing calls.

◆ SMDR Format—Type

Selects the format of SMDR output.

Value Range

Type A: 80 digits without call charge information
Type B: 80 digits with call charge information
Type C: 120 digits

Feature Guide References

2.22.1.1 Station Message Detail Recording (SMDR)

◆ SMDR Format—Port

Selects the Serial Interface port that is used to output the SMDR data.

Value Range

None, LAN(TELNET)

Feature Guide References

2.22.1.1 Station Message Detail Recording (SMDR)

◆ SMDR Format—Page Length (Number of Lines)

Specifies the number of lines on a page of output paper. Match the SMDR output to the paper size being used in the printer.

Value Range

No Print, 4–99

Feature Guide References

2.22.1.1 Station Message Detail Recording (SMDR)

◆ SMDR Format—Blank Footer Length (Number of Lines)

Specifies the number of lines to be skipped at the end of every page. The number of lines for the skip perforation should be shorter than the page length.

Value Range

0–95

Feature Guide References

2.22.1.1 Station Message Detail Recording (SMDR)

◆ SMDR Format—Date Format

Selects the printed date format.

Value Range

MM-DD-YY, DD-MM-YY, YY-MM-DD, YY-DD-MM

Feature Guide References

2.22.1.1 Station Message Detail Recording (SMDR)

◆ SMDR Format—Time Format (12H / 24H)

Selects whether times are displayed using the 12- or 24-hour format.

Value Range

12H, 24H

Feature Guide References

2.22.1.1 Station Message Detail Recording (SMDR)

◆ Print Information—Outgoing Call

Specifies whether the dialled digits of outgoing trunk calls are printed. Class of Service (COS) programming determines the printable records.

Value Range

No Print, Print

PC Programming Manual References

10.7.1 PBX Configuration—[2-7-1] System—Class of Service—COS Settings—CO & SMDR—◆ Outgoing CO Call Printout (SMDR)

Feature Guide References

2.22.1.1 Station Message Detail Recording (SMDR)

◆ Print Information—Incoming Call

Specifies whether the information relating to incoming trunk calls, such as caller's identification name and number, is printed.

Value Range

No Print, Print

Feature Guide References

2.22.1.1 Station Message Detail Recording (SMDR)

◆ Print Information—Intercom Call

Specifies whether the dialled digits of outgoing intercom calls are printed.

Value Range

No Print, Print

Feature Guide References

2.22.1.1 Station Message Detail Recording (SMDR)

◆ Print Information—Log-in / Log-out

Specifies whether the log-in/log-out status is printed.

Value Range

No Print, Print

Feature Guide References

2.2.2.7 Log-in/Log-out
2.22.1.1 Station Message Detail Recording (SMDR)

◆ Print Information—Hotel Room Status

Selects whether check-in and check-out data is output on SMDR.

Value Range

No Print, Print

PC Programming Manual References

14.2 PBX Configuration—[6-2] Feature—Hotel & Charge

Feature Guide References

2.22.1.1 Station Message Detail Recording (SMDR)
2.23.2 Room Status Control

◆ Print Information—Timed Reminder (Wake-up Call)

Selects whether Timed Reminder data is output on SMDR.

Value Range

No Print, Print

PC Programming Manual References

14.2 PBX Configuration—[6-2] Feature—Hotel & Charge

Feature Guide References

2.22.1.1 Station Message Detail Recording (SMDR)
2.24.4 Timed Reminder

◆ Print Information—Error Log

Specifies whether PBX error log information is output to SMDR.

Value Range

No Print, Print

Feature Guide References

2.22.1.1 Station Message Detail Recording (SMDR)
5.6.4 Local Alarm Information

SMDR Options

◆ Option—ARS Dial

Selects the type of the dialled number to be printed for a call with the ARS feature.

Value Range

Dial before ARS Modification: The user-dialled number
Dial after ARS Modification: The ARS modified number

Feature Guide References

2.5.4.8 Host PBX Access Code (Access Code to the Telephone Company from a Host PBX)
2.8 Automatic Route Selection (ARS) Features
2.22.1.1 Station Message Detail Recording (SMDR)

◆ Option—Caller ID Number & Name

Selects the printing format of caller identifications for incoming trunk calls.

Value Range

None, Number, Name, Name + Number

Feature Guide References

2.22.1.1 Station Message Detail Recording (SMDR)

◆ Option—DDI/DID Number & Name

Selects the printing format of incoming trunk calls with a DDI/DID number.

Value Range

None, Number, Name, Name + Number

Feature Guide References

2.22.1.1 Station Message Detail Recording (SMDR)

◆ Option—Secret Dial

Selects the printing format of calls with a secret dial. The secret dial conceals all or part of the dialled number. Note that selecting **Dial before ARS Modification** in ◆ **Option—ARS Dial** on this screen indicates the dialled numbers as dots regardless of this setting.

Value Range

Print "...." (Secret), Print Dialled Number

Feature Guide References

2.6.1 Memory Dialling Features—SUMMARY
2.22.1.1 Station Message Detail Recording (SMDR)

◆ Option—Privacy Mode

Selects whether private dialling is enabled or disabled, and how many digits to hide when enabled.
To enable this setting, ◆ **Print Information—Outgoing Call** on the **SMDR** tab should be set to **Print**.

Value Range

Print Dialled Number: Disables private dialling; all dialled numbers are shown on SMDR.
No Print: No dialled number will be shown on SMDR.
Print "X", Print "XX", Print "XXX", Print "XXXX": The selected number of digits at the end of dialled telephone numbers, and any additional digits dialled after connection, are shown on SMDR as "X".

PC Programming Manual References

19.1 PBX Configuration—[11-1] Maintenance—Main—SMDR—◆ Print Information—Outgoing Call

Feature Guide References

2.22.1.1 Station Message Detail Recording (SMDR)

◆ Option—Condition Code "RC"

Specifies whether the time of receiving an incoming trunk call is printed.

Value Range

No Print, Print

Feature Guide References

2.22.1.1 Station Message Detail Recording (SMDR)

◆ Option—Condition Code "AN"

Specifies whether the time of answering an incoming trunk call is printed.

Value Range

No Print, Print

Feature Guide References

2.22.1.1 Station Message Detail Recording (SMDR)

◆ Option—Caller ID Modification

Specifies whether Caller ID numbers are recorded on SMDR as received (before being modified by the PBX) or after being modified.

Value Range

Before Modification, After Modification

PC Programming Manual References

11.1.3 PBX Configuration—[3-1-3] Group—Trunk Group—Caller ID Modification

Feature Guide References

2.22.1.1 Station Message Detail Recording (SMDR)

◆ Emergency Call Notification

Specifies if an emergency call is recorded on SMDR only when the call is completed, or when the call is initially dialled as well.

Value Range

End of Call, Start and End of Call

Feature Guide References

2.22.1.1 Station Message Detail Recording (SMDR)

◆ LAN—SMDR Port Number

Specifies the port number used to output SMDR data via the LAN.

Value Range

1–65535

Feature Guide References

2.22.1.1 Station Message Detail Recording (SMDR)

◆ LAN—SMDR Password

Specifies the password used to output the SMDR data via the LAN.

Value Range

Max. 10 characters

Feature Guide References

2.22.1.1 Station Message Detail Recording (SMDR)

◆ LAN—New Line Code for Telnet

Specifies the new line code for a terminal emulator.
If the terminal emulator automatically feeds lines with a carriage return, select **CR** (Carriage Return).
If not, select **CR + LF** (Line Feed).

Value Range

CR + LF, CR

Feature Guide References

2.22.1.1 Station Message Detail Recording (SMDR)

Maintenance

◆ Local Alarm Display—Extension 1, Extension 2

Specifies the extension numbers of PTs that will be notified by the PBX about local alarms. When the PBX detects a PBX error, the System Alarm button on the PT turns on red. When this button is pressed, the display will show the error number, and the button light will turn off automatically.

Value Range

Max. 5 digits (consisting of 0–9)

Feature Guide References

5.6.4 Local Alarm Information

◆ Daily Test Start Time—Set

Enables the daily self check of the PBX for local alarm and error log.

Value Range

Disable, Enable

Feature Guide References

5.6.4 Local Alarm Information

◆ Daily Test Start Time—Hour

Specifies the hour of the PBX daily self check start time.

Value Range

0–23

Feature Guide References

5.6.4 Local Alarm Information

◆ Daily Test Start Time—Minute

Specifies the minute of the PBX daily self check start time.

Value Range

0–59

Feature Guide References

5.6.4 Local Alarm Information

◆ Error Log for UM Port Busy—Detection of All UM Port Busy

Enables error information to be logged in the PBX if UM ports were all busy specified in **Detection of All UM Port Busy**. This item is recorded by Syslog. If this Log is frequently recorded in your customer, it indicates insufficiency of UM port. Recommend to purchase Activation Keys for expand UM port.

Value Range

Disable, Enable

PC Programming Manual References

7.3.2 Utility—Log—Syslog

◆ Error Log for UM Port Busy—Detection Busy Threshold Time

Enables error information to be logged in the PBX if UM ports were all busy time specified in **Detection Busy Threshold Time**. This item is recorded by Syslog. If this Log is frequently recorded in your customer, it indicates insufficiency of UM port. Recommend to purchase Activation Keys for expand UM port.

Value Range

3-300 (sec)

PC Programming Manual References

7.3.2 Utility—Log—Syslog

◆ Error Log for Centralised VM—Network MSW Transmission (Counter)

Enables error information to be logged in the PBX if network message waiting information is deleted after re-transmission is repeated for the number of times specified in ◆ **Network MSW Data Transmission for Centralised VM Feature—Data Re-transmission : Repeat Counter** in **17.2 PBX Configuration—[9-2] Private Network—Network Data Transmission**.

Value Range

Disable, Enable

PC Programming Manual References

17.1 PBX Configuration—[9-1] Private Network—TIE Table—◆ Enhanced QSIG Call Information (Activation Key Required)
17.2 PBX Configuration—[9-2] Private Network—Network Data Transmission—◆ Network MSW Data Transmission for Centralised VM Feature—Data Re-transmission : Repeat Counter

Feature Guide References

4.2.5.2 Centralised Voice Mail

◆ Error Log for Centralised VM—Network MSW Transmission (Buffer)

Enables error information to be logged in the PBX if the quantity of network message waiting information being re-transmitted is larger than the transmission buffer.

Value Range

Disable, Enable

PC Programming Manual References

17.1 PBX Configuration—[9-1] Private Network—TIE Table—◆ Enhanced QSIG Call Information (Activation Key Required)

Feature Guide References

4.2.5.2 Centralised Voice Mail

Remote

◆ Remote—Analogue Remote (Modem) Floating Extension Number

Specifies the floating extension number for analogue remote maintenance. To enable this setting, an RMT card must be installed, and ◆ Remote—Remote Programming on this screen must be enabled.

Value Range

Max. 5 digits (consisting of 0–9)

Feature Guide References

5.5.2 PC Programming

◆ Remote—ISDN Remote Floating Extension Number

Specifies the floating extension number for ISDN remote maintenance. To enable this setting, ◆ Remote—Remote Programming on this screen must be enabled.

Value Range

Max. 5 digits (consisting of 0–9)

Feature Guide References

5.5.2 PC Programming

◆ Remote—Remote Programming

Enables system programming, diagnosis, and data upload from a remote location.

Value Range

Disable, Enable

Feature Guide References

5.5.2 PC Programming

◆ Remote—Password Lock Counter for Remote Programming

Specifies the number of successive incorrect password entries allowed before remote access is locked.

Value Range

None, 1–15

Feature Guide References

5.5.2 PC Programming

◆ Remote—Remote Maintenance Dial Number (Own Telephone number for reference)

Specifies the telephone number of the PBX used to access the PBX from a remote location for maintenance purposes. This number can be specified by Quick Setup.

Value Range

Max. 32 digits (consisting of 0–9, *, and #)

Feature Guide References

5.5.2 PC Programming

Password

Passwords authorise the user to programme the extension and the PBX by a PT or a personal computer.

◆ System Password - PT Programming—Prog **: User Level

Specifies the System password to authorise the PT user to access User Level programming.

Value Range

4–10 digits (consisting of 0–9, *, and #)

Feature Guide References

5.5.2 PC Programming

◆ System Password - PT Programming—Prog *#: Administrator Level

Specifies the System password to authorise the PT user to access User Level programming.

Value Range

4–10 digits (consisting of 0–9, *, and #)

Feature Guide References

5.5.2 PC Programming

◆ Manager Password - PT Programming—Prog *1

Specifies the manager password to authorise the PT user to access manager programming.

Value Range

4–10 digits (consisting of 0–9, *, and #)

Feature Guide References

5.1.6 Manager Features

19.2 PBX Configuration—[11-2] Maintenance—PT Programming Access

The programming items accessible at User and Administrator level can be specified. 100 programming item numbers are displayed at a time. To display other sets of numbers, click the applicable tab.

◆ Program Number

Indicates the programming item number (reference only).

Value Range

000–999

Feature Guide References

5.5.3 PT Programming

◆ Programme Launcher

Selects whether User Level PT users can access each system programming item.

Value Range

Disable, Enable

Feature Guide References

5.5.3 PT Programming

◆ PROG*#

Selects whether Administrator Level PT users can access each system programming item.

Value Range

Disable, Enable

Feature Guide References

5.5.3 PT Programming

19.3 PBX Configuration—[11-3] Maintenance—Air Synchronisation

You can programme and view settings for Air Synchronisation Groups.
Select an Air Synchronisation Group (1-4) to programme from the **Air Synchronisation Group Number** drop-down list.
It is possible to synchronise CSs with each other within the air synchronisation group.
Click **Sort** to reorder CSs with traditional CSs first, followed by IP-CSs.
To open the screen described in **7.4.4 Utility—Monitor/Trace—CS Status Monitor**, click **CS Status Monitor**.
Air Synchronisation Groups can be programmed only in On-line mode.
The **Shelf**, **Slot**, and **Port** for each item are displayed for your reference. For details, see **Common Programming Reference Items** in **9.1 PBX Configuration—[1-1] Configuration—Slot**.

Adding CSs

Follow the steps below to add CSs to the air synchronisation group.

1. Connect the CS to be registered to the network and, if necessary, the power supply.
2. Click **Add**.
   A dialogue box will appear. Non-registered (available) CSs are displayed on the left.
3. Highlight CSs and click the right arrow to select them for addition.
4. Click **OK**.

Deleting CSs

Follow the steps below to delete CSs from the air synchronisation group.

1. Click **Delete**.
   A dialogue box will appear. Registered CSs are displayed on the left.
2. Highlight CSs and click the right arrow to select them for deletion.
3. Click **OK**.

◆ Index

Indicates the CS number (reference only).

Value Range

1–16

◆ Shelf

Indicates the shelf number (reference only).

Value Range

1: Main unit
2: Expansion Unit1
3: Expansion Unit2
4: Expansion Unit3
Virtual: Virtual Slot

◆ Slot

Indicates the slot number (reference only).

Value Range

4-5: Main unit
2-3: Expansion Unit
9-12: Virtual Slot

◆ Port

Indicates the port number (reference only).

Value Range

1–4

◆ CS Name

Indicates the name of the CS (reference only).

Value Range

Max. 20 characters

◆ Connection

Indicates the port status. To change the status of the port, click the desired cell in the column, and then select **INS** or **OUS** for the port.

Value Range

INS: The port is in service.
OUS: The port is out of service.
Fault: The port is not communicating with the network.

◆ Status

Indicates whether a certain CS is registered (reference only).

Value Range

-, Registered

◆ CS Class

Specifies the classification of each CS. This parameter can only be modified when **Connection** on this screen is set to **OUS**.

Value Range

Sync Master CS1, Sync Master CS2, Sync Slave CS

◆ Primary CS—Index

Specifies the number of the primary CS.

Value Range

1–16

◆ Primary CS—Shelf

Indicates the shelf number (reference only).

Value Range

1: Main unit
2: Expansion Unit1
3: Expansion Unit2
4: Expansion Unit3

◆ Primary CS—Slot

Indicates the slot position of the primary CS (reference only).

Value Range

Slot number

◆ Primary CS—Port

Indicates the port number of the primary CS (reference only).

Value Range

Port number

◆ Primary CS—CS Name

Indicates the name of the primary CS (reference only).

Value Range

Max. 20 characters

◆ Secondary CS—Index

Specifies the number of the secondary CS.

Value Range

1–16

◆ Secondary CS—Shelf

Indicates the shelf number (reference only).

Value Range

1: Main unit
2: Expansion Unit1
3: Expansion Unit2
4: Expansion Unit3

◆ Secondary CS—Slot

Indicates the slot position of the secondary CS (reference only).

Value Range

Slot number

◆ Secondary CS—Port

Indicates the port number of the secondary CS (reference only).

Value Range

Port number

◆ Secondary CS—CS Name

Indicates the name of the secondary CS (reference only).

Value Range

Max. 20 characters

Section 20

UM Configuration—[1] Mailbox Settings

This section serves as reference operating instructions for the Mailbox Settings menu of the UM Configuration menu of the Setup screen of Web Maintenance Console.

20.1 UM Configuration—[1] Mailbox Settings

A maximum of 500 subscriber mailboxes can be created. Although the System Manager can use a telephone to create or edit mailboxes, the System Administrator can create several mailboxes at once using Web Maintenance Console. Each mailbox can be edited based upon the needs of the subscriber.
Click each tab on the Mailbox Settings screen to specify the desired parameters.

Adding Mailboxes

1. Click the icon.
2. Edit each parameter in the "Mailbox" dialogue box.
3. Click **OK**.

A range of mailboxes can be added that use the default mailbox settings.

1. Click the icon.
2. Specify the range of mailboxes to add in **From** and **To**. Check **Use the same number for Mailbox and Extension** to assign each mailbox to the same number extension.
3. Enter the number of mailboxes to create in **Number Of Mailboxes:**. To edit the default settings to be used for each new mailbox, click **Edit Default Mailboxes** and make changes as necessary.
4. When all settings have been made, click **OK** to create the range of mailboxes.

Editing Mailboxes

To edit a specific mailbox, select the desired mailbox, then click the icon. You can also edit specific parameters directly from the Mailbox Settings screen.

Deleting Mailboxes

1. Select a mailbox.
2. Click the icon.
3. Click **OK**.

20.1.1 UM Configuration—[1-1] Mailbox Settings—Quick Setting

With Quick Settings, you can set the necessary minimum settings for Unified Messaging mailboxes. This setting is available at the User (Administrator) level.

◆ Mailbox Number

Specifies the subscriber's mailbox number. The maximum number of digits that can be used for mailbox numbers is set in **24.4 UM Configuration—[5-4] System Parameters—Parameters—Mailbox—◆ Mailbox No. Max. Length (3-8)**, or when you initialise the system.

Note

The mailbox number can only be set when adding a mailbox; when editing a mailbox, you cannot change the assigned mailbox number.

Value Range

2–[the value set in ◆ **Mailbox No. Max. Length (3-8)**] digits

PC Programming Manual References

10.9 PBX Configuration—[2-9] System—System Options—Option 9

Feature Guide References

3.1.1 Unified Messaging System Overview
3.2.2 Subscriber Features—3.2.2.17 Mailbox

◆ Extension

Specifies the extension number of the mailbox's subscriber. Any valid extension number including an Extension Group number can be assigned.

Note

If an Extension Group number is assigned to a mailbox, all group members are able to access the messages stored in the mailbox.

Value Range

2–8 digits

PC Programming Manual References

10.9 PBX Configuration—[2-9] System—System Options—Option 9

Feature Guide References

3.1.1 Unified Messaging System Overview
3.2.2 Subscriber Features—3.2.2.17 Mailbox

◆ First Name

Specifies the first name of the subscriber. If there are non-alphabetical characters in the first 4 letters of the first name, the mailbox is not included in the directory.

Value Range

Max. 20 characters

PC Programming Manual References

21.1 UM Configuration—[2] Class of Service—◆ Directory Listing

Feature Guide References

3.2.1.16 Dialling by Name

◆ Last Name

Specifies the last name of the subscriber. If there are non-alphabetical characters in the first 4 letters of the first name, the mailbox is not included in the directory.

Value Range

Max. 20 characters

20.1.2 UM Configuration—[1-2] Mailbox Settings—Full Setting

Mailbox Parameters

◆ Mailbox Number

Specifies the subscriber's mailbox number. The maximum number of digits that can be used for mailbox numbers is set in **24.4 UM Configuration—[5-4] System Parameters—Parameters—Mailbox—◆ Mailbox No. Max. Length (3-8)**, or when you initialise the system.

Note

The mailbox number can only be set when adding a mailbox; when editing a mailbox, you cannot change the assigned mailbox number.

Value Range

2–[the value set in ◆ **Mailbox No. Max. Length (3-8)**] digits

PC Programming Manual References

10.9 PBX Configuration—[2-9] System—System Options—Option 9

Feature Guide References

3.1.1 Unified Messaging System Overview
3.2.2 Subscriber Features—3.2.2.17 Mailbox

◆ Extension

Specifies the extension number of the mailbox's subscriber. Any valid extension number including an Extension Group number can be assigned.

Note

If an Extension Group number is assigned to a mailbox, all group members are able to access the messages stored in the mailbox.

Value Range

2–8 digits

PC Programming Manual References

10.9 PBX Configuration—[2-9] System—System Options—Option 9

Feature Guide References

3.1.1 Unified Messaging System Overview
3.2.2.17 Mailbox

◆ First Name

Specifies the first name of the subscriber. If there are non-alphabetical characters in the first 4 letters of the first name, the mailbox is not included in the directory.

Value Range

Max. 20 characters

PC Programming Manual References

21.1 UM Configuration—[2] Class of Service—◆ Directory Listing

Feature Guide References

3.2.1.16 Dialling by Name

◆ Last Name

Specifies the last name of the subscriber. If there are non-alphabetical characters in the first 4 letters of the first name, the mailbox is not included in the directory.

Value Range

Max. 20 characters

PC Programming Manual References

21.1 UM Configuration—[2] Class of Service—◆ Directory Listing

Feature Guide References

3.2.1.16 Dialling by Name

◆ Mailbox Password

Specifies the password needed to access the mailbox. If a default password is programmed by an administrator, that password will be assigned automatically when creating all mailboxes. Administrators can change and delete the password.
To change a password for a mailbox:

1. On the Mailbox Parameters Screen, click **Edit** under **Mailbox Password** for the mailbox extension to change.
2. In the window that appears, enter the new password and then enter it again to confirm it.
3. Click **OK**.

Value Range

Max. 16 digits

PC Programming Manual References

26.1 UM Configuration—[7] System Security—Subscriber

Feature Guide References

3.1.2.4 Password Administration

◆ Mailbox Password (Message Client)

Specifies the password needed to access the mailbox when using a client software programme. If a default password is programmed by an administrator, that password will be assigned automatically when creating all mailboxes. Administrators can change and delete the password.

Note

This setting requires the installation of an Activation Key for Unified Messaging E-mail Notification (KX-NSU2xx) for the number of users that will be accessing their UM mailbox using a client software programme.

To change a password for a mailbox:

1. On the Mailbox Parameters Screen, click **Edit** under **Mailbox Password (Message Client)** for the mailbox extension to change.
2. In the window that appears, enter the new password and then enter it again to confirm it.
3. Click **OK**.

Value Range

4–16 characters (A–Z, a–z, 0–9)

PC Programming Manual References

26.1 UM Configuration—[7] System Security—Subscriber

Feature Guide References

3.1.2.4 Password Administration

◆ Class of Service (Mailbox)

Determines the set of services available to the subscriber.

Note

- We recommend that parameters for each COS number be defined before assigning a Class of Service (COS) to each mailbox or creating new mailboxes.
- COS No. 65 and 66 are assigned by default to the Message Manager and to the System Manager, respectively. No other mailboxes can be assigned to COS No. 65 and 66.

Value Range

COS No. 1–66

PC Programming Manual References

10.9 PBX Configuration—[2-9] System—System Options—Option 9
21.1 UM Configuration—[2] Class of Service

Feature Guide References

3.1.1 Unified Messaging System Overview
3.2.1.11 Class of Service (COS)

◆ Covering Extension

Forwards calls to a second extension when the first extension's subscriber is not available to take the call. The Covering Extension is one of the Incomplete Call Handling options that can be enabled or disabled by the subscriber. The caller can also be transferred the Covering Extension by pressing [0] while a Personal Greeting is being played, or while leaving a message.

Note

Extension Groups or Logical Extensions (extensions whose calls are set to always be directed their mailboxes) cannot be assigned as covering extensions.

Value Range

1–8 digits

Feature Guide References

3.2.1.14 Covering Extension

◆ Interview Mailbox

Assigns an interview mailbox to the subscriber's mailbox. In order for it to function properly, the interview mailbox number must not be the same number as an existing mailbox and an existing mailbox group.

Note

Each caller's replies to an interview session are saved as one message.

Value Range

2–[the value set in ◆ **Mailbox No. Max. Length (3-8)**] digits

Feature Guide References

3.2.1.24 Interview Service

◆ All Calls Transfer to Mailbox

If this parameter is set to "Yes", the extension is considered to be a Logical Extension and therefore calls directed to the extension via Automated Attendant service are automatically forwarded to the extension mailbox. The extension does not ring when a call is received.

Value Range

No, Yes

Feature Guide References

3.2.1.3 Automated Attendant (AA)

◆ Call Transfer Sequence (Selection)

Specifies the method for the Call Transfer Sequence used by the mailbox. Allows each mailbox to be assigned its own Call Transfer Sequence (Personal Transfer Sequence).

Note

This sequence has higher priority than the alternate extension transfer sequence specified in **24.4 UM Configuration—[5-4] System Parameters—Parameters—PBX Parameters—◆ PBX Environment—Alternate Extension Transfer Sequence (Up to 16 digits / [0-9 * # D R F T X , ;])**.

Value Range

System, Other

Note

When "System" is selected, the Unified Messaging system uses the extension transfer sequence pre-programmed in **24.4 UM Configuration—[5-4] System Parameters—Parameters—PBX Parameters—◆ PBX Environment—Extension Transfer Sequence (Up to 16 digits / [0-9 * # D R F T X , ;])**.

PC Programming Manual References

24.4 UM Configuration—[5-4] System Parameters—Parameters—PBX Parameters—◆ PBX Environment—Extension Transfer Sequence (Up to 16 digits / [0-9 * # D R F T X , ;])

Feature Guide References

3.2.2.7 Call Transfer Status

◆ Call Transfer Sequence (Other)

Specifies the Call Transfer Sequence used by the mailbox. Only specified if ◆ **Call Transfer Sequence (Selection)** is set to "Other".

Value Range

Enter a maximum of 16 characters consisting of 0–9, ⋇, # and special codes:
D: Disconnecting
F: Flash (Recall)
R: Ringback Tone Detection
T: Dial Tone Detection
, : Dial Pause (default 1 s)
; : Dial Pause (default 3 s)
X: Extension Dialling
0–9, ⋇, #: Dial Code

Feature Guide References

3.2.2.7 Call Transfer Status

◆ No Answer Time (Selection/Other)

Specifies the length of time that the Unified Messaging system waits before handling unanswered calls to the extension.

Note

When "System" is selected, the Unified Messaging system uses the time pre-programmed in **24.4 UM Configuration—[5-4] System Parameters—Parameters—Dialling Parameters/MSW Notification—◆ Dialling Parameters—Call Transfer No Answer Time (10-60 s)**.

Value Range

System, Other (If "Other" is selected, specify 10–60 s)

PC Programming Manual References

24.4 UM Configuration—[5-4] System Parameters—Parameters—Dialling Parameters/MSW Notification—◆ Dialling Parameters—Call Transfer No Answer Time (10-60 s)

◆ Call Transfer Status

Determines how the Unified Messaging system handles a call when it reaches the subscriber's extension. Click **Edit** for the extension to change, programme the settings, and click **OK** to finish.

Note

This setting can be changed by subscribers.

Value Range

None: Rings the subscriber's extension.
Call blocking: Handles the call according to the Incomplete Call Handling for No Answer setting for the subscriber's extension. The subscriber's extension will not ring.
Call screening: The caller is prompted to record his or her name. The Unified Messaging system then calls the subscriber and plays back the caller name. The subscriber can choose whether to answer the call.
Intercom Paging: Pages the subscriber by intercom.
Transfer to Mailbox: Transfers the caller to the mailbox.
Transfer to specified Custom Service Menu: Transfers the caller to the specified Custom Service.
Transfer to specified telephone number 1–5: Transfers the caller to one of the specified telephone numbers in numerical order of priority.

Feature Guide References

3.2.2.7 Call Transfer Status

◆ Incomplete Call Handling for No Answer

Specifies how the Unified Messaging system handles a call when there is no answer. Click **Edit** for the extension to change, programme the settings, and click **OK** to finish.

Note

- This setting can be changed by subscribers.
- More than one option can be selected.

Value Range

Leave a Message: Allows the caller to record a message.
Transfer to a covering extension: Transfers the caller to a covering extension.
Page the mailbox owner by intercom paging: Pages the subscriber by intercom.
Transfer to operator: Transfers the caller to an operator.
Return to top menu: Lets the caller return to top menu and try another extension.
Transfer to specified Custom Service Menu: Transfers the caller to the specified Custom Service.

Feature Guide References

3.2.2.15 Incomplete Call Handling Service

◆ Incomplete Call Handling for Busy

Specifies how the Unified Messaging system handles a call when the extension is busy. Click **Edit** for the extension to change, programme the settings, and click **OK** to finish.

Note

- This setting can be changed by subscribers.
- More than one option can be selected.

Value Range

Leave a Message: Allows the caller to record a message.
Transfer to a covering extension: Transfers the caller to a covering extension.
Page the mailbox owner by intercom paging: Pages the subscriber by intercom.
Transfer to operator: Transfers the caller to an operator.
Return to top menu: Lets the caller return to top menu and try another extension.
Transfer to specified Custom Service Menu: Transfers the caller to the specified Custom Service.

Feature Guide References

3.2.2.15 Incomplete Call Handling Service

◆ Call Transfer Anytime in Incomplete Handling Menu

Specifies whether callers can input an extension number to transfer their call while the Automated Attendant service is playing an Incomplete Call Handling menu.

Value Range

Enable, Disable

Notification Parameters

The Unified Messaging system is able to notify a subscriber when a new message is recorded in his or her mailbox. There are 3 methods the system can use for notification:

– Lighting the Message Waiting Lamp on the subscriber's extension telephone.
– Calling a pre-programmed device (external telephone, etc.). A maximum of 3 devices (Device 1, 2, 3) can be programmed per mailbox.
– Sending an e-mail to a designated address.

◆ Message Waiting Lamp

If set to "Enable", the Message Waiting Lamp of the subscriber's telephone turns on when a new message is recorded.

Value Range

Disable, Enable

Feature Guide References

3.2.1.29 Message Waiting Notification—Lamp

◆ Telephone Device

Specifies the Message Waiting Notification schedule for each device. The following parameters can be specified for devices 1, 2, and 3. Click **Edit** for the extension to change, set **Device Notification for Unreceived Message** to "Yes", and programme the settings, then click **OK** to finish.

Feature Guide References

3.2.1.30 Message Waiting Notification—Telephone Device

◆ Telephone Device—Device No. 1, 2, 3—Only Urgent Messages

Specifies if notifications will be sent only for messages designated as urgent.

Value Range

Yes, No

Feature Guide References

3.2.1.30 Message Waiting Notification—Telephone Device

◆ Telephone Device—Device No. 1, 2, 3—Dial Number [0-9 * # T X , ;]

Assigns a telephone number to Device 1, 2, or 3. The subscriber can also specify the number to be dialled by entering it from his or her telephone, allowing the subscriber to set this feature on a case by case basis.

Note

When the Unified Messaging system calls a trunk via the PRI card, be sure to add "#" after the telephone number (1112223333 in the example here): 9P1112223333#PP123PP456PPX# (P: Dial Pause)

Value Range

Max. 32 digits consisting of 0–9, ⁎, # and special codes:
, : Dial Pause (default 1 s)
; : Dial Pause (default 3 s)
T: Dial Tone Detection
X: Callback Number Entry Code
0–9, ⁎, #: Dial Code

Feature Guide References

3.2.1.30 Message Waiting Notification—Telephone Device

◆ Telephone Device—Device No. 1, 2, 3—No. of Retries

Specifies the number of times the Unified Messaging system will try to send notification if the device is busy or if there is no answer.

Value Range

0–9 times

Feature Guide References

3.2.1.30 Message Waiting Notification—Telephone Device

◆ Telephone Device—Device No. 1, 2, 3—Busy Delay Time (min)

Specifies the time (in minutes) the Unified Messaging system waits before retrying message notification when the called device is busy.

Value Range

0–120 min

Feature Guide References

3.2.1.30 Message Waiting Notification—Telephone Device

◆ Telephone Device—Device No. 1, 2, 3—No Answer Delay Time (min)

Specifies the time (in minutes) the Unified Messaging system waits before retrying message notification when the called device does not answer.

Value Range

1–120 min

Feature Guide References

3.2.1.30 Message Waiting Notification—Telephone Device

◆ Telephone Device—Device No. 1, 2, 3—Use Mode

Specifies if and how each device is used for message notification. The subscriber can also specify the use mode from his or her telephone.
Schedule: If **Scheduled** is selected here, follow the steps below to specify the time frame:

1. Select a day from the **Day** drop-down list (Sunday – Saturday).
2. Click **Enable Time Frame No. 1** or **2**.
3. Enter the start and end times in the **Start At (HH:MM)** and **End At (HH:MM)** fields.
4. Repeat steps **1** to **3** for each day to be programmed, and then click **OK**.

Value Range

Not use: The selected device is not used for message notification.
Continuously: The device is called whenever a message is recorded in the mailbox. If **Only Urgent Messages** is set to "Yes", the device is called whenever an urgent message is recorded in the mailbox.
Scheduled: The selected device is called only during the selected times.

Feature Guide References

3.2.1.30 Message Waiting Notification—Telephone Device

◆ Telephone Device—Device Notification Timer—Device Start Delay Time (0-120 min)

Specifies the length of time the system waits after a new message is received before sending message waiting notification.

Value Range

0–120 min

Feature Guide References

3.2.1.30 Message Waiting Notification—Telephone Device

◆ Telephone Device—Device Notification Timer—Device Interval Time between Device 1, 2, 3 and Next Device

Specifies how long the PBX waits after sending Message Waiting Notification to Device 1, 2, or 3 before sending notification to the next device.

Value Range

0–120 min

Feature Guide References

3.2.1.30 Message Waiting Notification—Telephone Device

◆ E-mail/Text Message Device—Device No. 1, 2, 3—User Name

Specifies the name of the user of the device.

Value Range

Max. 64 characters

Feature Guide References

3.2.1.28 Message Waiting Notification—E-mail Device

◆ E-mail/Text Message Device—Device No. 1, 2, 3—E-mail Address

Specifies the e-mail address of the device.

Note

- This setting requires the installation of an Activation Key for Unified Messaging E-mail Notification (KX-NSU2xx) for the number of users that will be accessing their UM mailbox using a client software programme.
- In the mailbox user's profile (See **8.1 Users—User Profiles**) if **Email 1–3** is input in the **Contact** tab, and **Automatic copy to UM message notification** is checked, the e-mail address(es) will be copied to this setting and overwrite any previously input data here.

Value Range

Max. 128 characters

Feature Guide References

3.2.1.28 Message Waiting Notification—E-mail Device

◆ E-mail/Text Message Device—Device No. 1, 2, 3—Only Urgent Messages

Specifies if Message Waiting Notifications will be sent only for urgent messages.

Value Range

Yes, No

Feature Guide References

3.2.1.28 Message Waiting Notification—E-mail Device

◆ E-mail/Text Message Device—Device No. 1, 2, 3—Title Order

Specifies the format of the title of the notification.

Value Range

Title-ID-Name, Title-Name-ID, ID-Title-Name, Name-Title-ID, ID-Name-Title, Name-ID-Title

Feature Guide References

3.2.1.28 Message Waiting Notification—E-mail Device

◆ E-mail/Text Message Device—Device No. 1, 2, 3—Title String

Specifies the text string to be included as part of the title of the notification.

Value Range

Max. 30 characters

Feature Guide References

3.2.1.28 Message Waiting Notification—E-mail Device

◆ E-mail/Text Message Device—Device No. 1, 2, 3—Callback Number

Specifies the callback number to be included in the notification.

Value Range

Max. 32 digits (0–9, ＊, #)

Feature Guide References

3.2.1.28 Message Waiting Notification—E-mail Device

◆ E-mail/Text Message Device—Device No. 1, 2, 3—Send Wait Time [0-120 min]

Specifies the delay between the message being left and the sending of the Message Waiting Notification.

Value Range

0–120 min

Feature Guide References

3.2.1.28 Message Waiting Notification—E-mail Device

◆ E-mail/Text Message Device—Device No. 1, 2, 3—Attach Voice File

Specifies whether to attach a voice file of the voice message to the notification e-mail.

Value Range

Yes, No

Feature Guide References

3.2.1.28 Message Waiting Notification—E-mail Device

◆ E-mail/Text Message Device—Device No. 1, 2, 3—Use Mode

Specifies if and how each device is used for message notification.
If **Scheduled** is selected here, follow the steps below to specify the time frame:

1. Click a day (**Sunday** – **Saturday**) tab.
2. Click **Enable Time Frame No. 1** or **2**.
3. Enter the start and end times in the **Start At (HH:MM)** and **End At (HH:MM)** fields.
4. To specify if sent voice message is deleted from the Unified Message system after they are sent by e-mail, select "Yes" for **Delete After Send (Voice File)**.
5. Repeat steps **1** to **4** for each day to be programmed, and then click **OK**.

Value Range

Not use: The selected device is not used for message notification.
Continuously: The device is called whenever a message is recorded in the mailbox. If **Only Urgent Messages** is set to "Yes", the device is called whenever an urgent message is recorded in the mailbox.
Scheduled: The selected device is called only during the selected times.

Feature Guide References

3.2.1.28 Message Waiting Notification—E-mail Device

External MSG Delivery/Auto FWD/Personal Custom Serv

This tab contains programming items for External Message Delivery, Auto Forwarding, and Personal Custom Service settings.

◆ External Message Delivery Active

If set to "Yes", subscribers are able to utilise the External Message Delivery feature.

Value Range

No, Yes

Feature Guide References

3.2.2.12 External Message Delivery Service

◆ External Message Delivery Prompt Mode

When an external message is delivered, the receiver will be greeted by the system in the specified language. If set to "Primary", the default language will be used. If set to "Selective", the receiver has a choice of prompts.

See related explanation in **22.1 UM Configuration—[3-1] UM Extension / Trunk Service—Service Group—◆ Day, Night, Lunch, and Break Mode - Incoming Call Service Prompt**.

Note

If set to "Selective" and the receiver uses a rotary telephone, the no-entry selection is specified by **22.1 UM Configuration—[3-1] UM Extension / Trunk Service—Service Group—◆ Day, Night, Lunch, and Break Mode - Prompt for No DTMF Input Callers**.

Value Range

Primary, Selective, Guidance No. 1–8

PC Programming Manual References

22.1 UM Configuration—[3-1] UM Extension / Trunk Service—Service Group—◆ Day, Night, Lunch, and Break Mode - Incoming Call Service Prompt

Feature Guide References

3.2.1.41 System Prompts

◆ Auto Forwarding Active

If set to "Yes", the Unified Messaging system automatically forwards messages that have not been played for a specified length of time to another mailbox.

Value Range

No, Yes

Feature Guide References

3.2.1.2 Auto Forwarding

◆ Auto Forwarding Mailbox Number

Specifies the mailbox to which the messages will be forwarded.

Note

A Mailbox Group number cannot be specified as a destination.

Value Range

2–[the value set in ◆ **Mailbox No. Max. Length (3-8)**] digits

Feature Guide References

3.2.1.2 Auto Forwarding

◆ Auto Forwarding Delay Time

Specifies the length of time in hours and minutes that the system waits before forwarding unplayed messages. The maximum delay time is 99 h, 59 min.

Note

The delay time must be shorter than the New Message Retention Time, or else messages will be deleted before being forwarded.

Value Range

00:00–99:59

Feature Guide References

3.2.1.2 Auto Forwarding

◆ Auto Forwarding Message Type Urgent

Specifies whether only urgent messages are forwarded.

Value Range

Yes, No

Feature Guide References

3.2.1.2 Auto Forwarding

◆ Auto Forwarding Mode

Specifies if forwarded messages are to be retained in the original mailbox. When set to "Copy", copies of the messages are retained in the original mailbox after forwarding. When set to "Move", messages are forwarded to the receiving mailbox and are not retained in the original mailbox.

Value Range

Copy, Move

Feature Guide References

3.2.1.2 Auto Forwarding

◆ Auto Forwarding Mode - Message Remains New

Specifies if the forwarded messages remain marked as new. This setting is available only when ◆ **Auto Forwarding Mode** is set to "Copy".

Value Range

Yes, No

Feature Guide References

3.2.1.2 Auto Forwarding

◆ Auto Forwarding Expires

Specifies the date and time of day for when forwarding of messages will expire.

Value Range

Date and time

Feature Guide References

3.2.1.2 Auto Forwarding

◆ Personal Custom Service

Specifies the Personal Custom Service. The System Administrator can assign an operation to each key.

Note

- These settings can be changed by subscribers.
- Make sure to add a trunk access number when you store an outside telephone number.
- When the Unified Messaging system calls a trunk via the PRI card, be sure to add "#" after the telephone number (1112223333 in the example here): 9P1112223333#PP123PP456PPX# (P: Dial Pause)

Follow the steps below to edit a Personal Custom Service.

1. Click **Edit**.
2. For each **Key**, specify an **Assigned Operation**.
3. For each **Assigned Operation** that is specified, specify a **Value**
4. Click **OK** when finished.

Assigned Operation

- **Transfer to specified mailbox**: Allow the caller to leave messages in a specified mailbox.
- **Transfer to specified extension**: Transfers the caller to a specified extension.
- **Transfer to Voice Mail Service**: Allows the caller to access Voice Mail Service.
- **Transfer to Automated Attendant Service**: Allows the caller to access Automated Attendant Service.
- **Transfer to specified Custom Service Menu**: Transfers the caller to the Custom Service specified here.
- **Transfer to operator**: Connects the caller to an operator.
- **Transfer to outside (specified number)**: Transfers the caller to a specified outside telephone number. →Enter the Outside Numbers list index (1-4).
- **Page the party**: Pages the subscriber.
- **Repeat greeting**: Repeats the greeting.
- **None**: No operation assigned.

Value Range

- **Transfer to specified mailbox**: 2–[the value set in ◆ **Mailbox No. Max. Length (3-8)**] digits
- **Transfer to specified extension**: 2–8 digits
- **Transfer to specified Custom Service Menu**: 1–200
- **Transfer to outside (specified number)**: Outside Number 1–4

Feature Guide References

3.2.2.21 Personal Custom Service

◆ Outside Numbers

Specifies the outside telephone numbers that can be used for the "Transfer to outside (specified number)" operation in the **Custom Service** settings. Click **OK** when finished.

Value Range

Outside Number #1–#4: Max. 32 digits consisting of 0–9, ⋇, #, and special codes
T: Dial Tone Detection
, : Dial Pause (default 1 s)
; : Dial Pause (default 3 s)
0–9, ⋇, #: Dial Code

Feature Guide References

3.2.2.21 Personal Custom Service

◆ No DTMF Input Operation

Specifies the operation taken when no DTMF input (a caller does not dial anything) is received after the Personal Greeting.

Value Range

Recording: The caller will be guided to leave a message.
Disconnect (All Day): The line will be disconnected, regardless of the time of day.
Disconnect (Only After Hours): The line will be disconnected only after hours.

Feature Guide References

3.2.2.21 Personal Custom Service

◆ No DTMF Input Operation Wait Time

Specifies the duration of time to wait for DTMF input before the action set in **No DTMF Input Operation** is performed.

Value Range

0–10 s

Feature Guide References

3.2.2.21 Personal Custom Service

Personal Distribution List

Personal Distribution Lists are used to send the same messages to several mailboxes in a single operation. A maximum of 4 lists can be maintained with each list containing a maximum of 40 mailboxes.

◆ List 1 Name–List 4 Name

Specifies a list name.

Value Range

Max. 32 characters

Feature Guide References

3.2.2.14 Group Distribution Lists

◆ List 1 Members–List 4 Members

Specifies the mailbox numbers that belong to the list.
Follow the steps below to edit list members.

1. Click **Edit** for a List Members item.
2. Under **Subscribers To Add**, click the checkbox in **No.** for each mailbox to add, referring to the mailbox numbers and mailbox owners' names.
3. Click **Add**.
4. Click **OK**.

Follow the steps below to remove members from a list.

1. Click **Edit** for Personal Distribution Lists (1–4) Members item.
2. Under **Distribution**, click the checkbox in **No.** for each mailbox to add, referring to the mailbox numbers and mailbox owners' names.
3. Click **Delete**.
4. Click **OK**.

Value Range

Max. 40 mailboxes per list

Feature Guide References

3.2.2.14 Group Distribution Lists

Remote Call/Automatic Login/Direct Service

This tab contains programming items for Remote Call Forwarding, Automatic Login, and Direct Service settings.

◆ Remote Call Telephone Number 1, 2

Specifies the telephone numbers of destinations to which callers are forwarded when the subscriber sets Remote Call Forwarding. 2 telephone numbers can be specified per mailbox. Telephone numbers can contain the digits "0–9" and "＊". These telephone numbers should begin with a trunk access number.

Note

Class of Service programming determines if the subscriber is able to use this feature.

Value Range

Max. 32 digits (consisting of 0–9 and "＊")

PC Programming Manual References

21.1 UM Configuration—[2] Class of Service—◆ Call Transfer to Outside

Feature Guide References

3.2.2.26 Remote Call Forwarding Set

◆ Auto Login Extension

When this item is set to "Enable", subscribers are able to access their mailbox directly without entering the mailbox number. Subscribers can automatically log in from their extensions, by calling from an outside telephone whose number is stored as a Caller ID number, or by dialling a telephone number assigned to a specified DID number or trunk. When logging in from outside telephones, the Toll Saver feature is also available.

Value Range

Disable, Enable

Feature Guide References

3.2.2.2 Automatic Login

◆ Auto Login Extension Password Entry Requirement

Specifies if a password is required for the Automatic Login Extension feature.

Notice

If this is set to "No", ensure that unauthorised third-parties are not allowed access to that mailbox.

Value Range

Yes, No

Feature Guide References

3.2.2.2 Automatic Login

◆ Auto Login Caller ID 1, 2

Specifies the telephone number from which the subscriber can automatically be logged in from. When Caller ID information is received that matches one of these numbers, the caller (subscriber) is automatically logged in to the mailbox. Note that this telephone number must be unique for each mailbox.

Value Range

Max. 20 digits

Feature Guide References

3.2.2.2 Automatic Login

◆ Auto Login Caller ID Password Entry Requirement

Specifies if a password is required for entry when automatic login is performed using the Caller ID of the number set in **Auto Login Caller ID 1** or **Auto Login Caller ID 2**.

Value Range

Yes, No

Notice

If this is set to "No", ensure that unauthorised third-parties are not allowed access to that mailbox using the number assigned to **Auto Login Caller ID 1** or **Auto Login Caller ID 2**.

Feature Guide References

3.2.2.2 Automatic Login

◆ Auto Login DDI/DID

Specifies the DDI/DID number for Automatic Login. When the Unified Messaging system receives this DDI/DID number from the PBX, the caller (subscriber) is automatically logged in to the mailbox. Note that this number must be unique for each mailbox.

Value Range

Max. 20 digits

Feature Guide References

3.2.2.2 Automatic Login

◆ Auto Login TRG No.

Specifies the trunk number for Automatic Login. When the Unified Messaging system receives a call on this trunk, the caller (subscriber) is automatically logged in to the mailbox. Note that this number must be unique for each mailbox.

Value Range

1–64

Feature Guide References

3.2.2.2 Automatic Login

◆ Auto Login DDI/DID, TRG No. Password Entry Requirement

Specifies if a password is required for entry when automatic login is performed using the trunk group number or the DID number.

Value Range

Yes, No

Notice

If this is set to "No", ensure that unauthorised third-parties are not allowed access to any extensions using the specified trunk group number.

Feature Guide References

3.2.2.2 Automatic Login

◆ Auto Login Toll Saver

Allows subscribers to call the Unified Messaging system and know whether or not new messages have been recorded in their mailboxes by the number of rings they hear before the Unified Messaging system answers their calls. Toll Saver is available under the same conditions as Automatic Login; subscribers can use Toll Saver when calling from an outside telephone whose number is stored as a Caller ID number, or by dialling a telephone number assigned to a specified DID number or trunk.

Value Range

Disable: Disables the Toll Saver feature.
DID: Toll Saver functions when the system receives the pre-programmed DID number from the PBX.
Caller ID: Toll Saver functions when Caller ID information is received that matches one of the pre-programmed numbers (Caller ID 1 or 2).
Trunk: Toll Saver functions when the system receives a call on the pre-programmed trunk.

Feature Guide References

3.2.2.29 Toll Saver

◆ Direct Service UM Extension

Specifies which features can be directly accessed by dialling a Unified Messaging extension number. This setting can only be specified for Unified Messaging extension numbers.

Note

Automatic Login must be enabled for extensions to use this feature.

Value Range

Record No Answer Greeting: The subscriber can record the greeting played when there is no answer.
Record Busy Greeting: The subscriber can record the greeting played when their extension is busy.
Record After Hours Greeting: The subscriber can record the greeting played when the system is in night mode.
Record Temporary Greeting: The subscriber can record a greeting that is used exclusively until the subscriber disables it.
Change Day Main Menu: The subscriber can change the Day Main Menu greeting. Only the Message Manager may make this change.
Change Night Main Menu: The subscriber can change the Night Main Menu greeting. Only the Message Manager may make this change.
Change Emergency Greeting: The subscriber can change the Emergency Greeting. Only the Message Manager may make this change.

PC Programming Manual References

9.6 PBX Configuration—[1-1] Configuration—Slot—UM Port Property
20.1.2 UM Configuration—[1-2] Mailbox Settings—Full Setting—Remote Call/Automatic Login/Direct Service—◆ Auto Login Extension

Feature Guide References

3.2.2.11 Direct Service Access

Announce Number of Messages

◆ Subscriber Service - All New Messages

Specifies if the system announces to subscribers the number of only new messages in their mailbox when the subscriber logs in.

Value Range

Yes, No

◆ Subscriber Service - All Messages

Specifies if the system announces to subscribers the number of all messages in their mailbox when the subscriber logs in.

Value Range

Yes, No

◆ Subscriber Service - New Voice Messages

Specifies if the system announces to subscribers the number of only new voice messages in their mailbox when the subscriber logs in.

Value Range

Yes, No

◆ Subscriber Service - New Urgent Messages

Specifies if the system announces to subscribers the number of only new messages marked as urgent in their mailbox when the subscriber logs in.

Value Range

Yes, No

◆ Receiving Message Service - All New Messages

Specifies if the system announces to subscribers the number of only new messages in their mailbox when the subscriber has selected to listen to messages.

Value Range

Yes, No

◆ Receiving Message Service - All Messages

Specifies if the system announces to subscribers the number of all messages in their mailbox when the subscriber has selected to listen to messages.

Value Range

Yes, No

◆ Receiving Message Service - New Voice Messages

Specifies if the system announces to subscribers the number of only new voice messages in their mailbox when the subscriber has selected to listen to messages.

Value Range

Yes, No

◆ Receiving Message Service - New Urgent Messages

Specifies if the system announces to subscribers the number of only new urgent messages in their mailbox when the subscriber has selected to listen to messages.

Value Range

Yes, No

◆ Message Client Display Language

Specifies the language of information generated by the UM system for the mail (IMAP) client.

Value Range

English, French, German, Italian, Dutch, Spanish, Portuguese, Russian

Quick Menu and Greeting Recording

◆ Quick Menu and Greeting Recording

When this setting is enabled for the Message Manager mailbox, the following features are enabled for the Message Manager to access greeting and recording management menus quickly.

- Custom Service Menu messages for Custom Service 1 and 2 can be recorded and changed from the Top Menu.
- Company Greeting No. 1 can be recorded and changed from the Top Menu. This is useful for recording the Emergency Greeting.

Value Range

Enable, Disable

PC Programming Manual References

23.3 UM Configuration—[4-3] Service Settings—Custom Service

Feature Guide References

3.2.1.17 Emergency Greeting

20.1.3 UM Configuration—[1-3] Mailbox Settings—Auto Configuration

Auto Configuration automatically associates extension numbers and mailboxes in bulk. This feature is available at the Installer level only.

◆ Select the following options

Specifies Auto configuration mode from the following.

Note

In **Re-create all mailboxes** mode, all voice data is deleted, including data that is recorded in mailboxes. It is strongly recommended that you backup the voice data that has been recorded in mailboxes. Backed up voice data can be restored as sound data on a PC by using special software tools. For details, consult your dealer.

Value Range

Create mailboxes
Re-create all mailboxes

Installation Manual References

5.11 Automatic Configuration of Mailboxes

Feature Guide References

3.1.2.1 Automatic Configuration of Mailboxes

Section 21

UM Configuration—[2] Class of Service

This section serves as reference operating instructions for the Class of Service menu of the UM Configuration menu of the Setup screen of Web Maintenance Console.

21.1 UM Configuration—[2] Class of Service

Each mailbox is assigned a Class of Service (COS) that determines the set of services that are available to its subscriber. There are 66 classes. Mailboxes can be assigned to their own or to the same COS as needed. COS No. 65 and 66 are assigned by default to the Message Manager and to the System Manager, respectively. No other mailboxes can be assigned to COS No. 65 and 66.

General

◆ Class Of Service Name

Specifies the Class of Service's name.

Value Range

Max. 32 characters

Feature Guide References

3.2.1.11 Class of Service (COS)

◆ Prompt Mode

Specifies the language used for system prompts played for the subscriber during Subscriber Service. If set to "Primary", the default language which is selected from all installed languages will be used.

Value Range

Primary, Guidance No. 1–8

PC Programming Manual References

24.4 UM Configuration—[5-4] System Parameters—Parameters—Prompt Setting—◆ Primary Language

Feature Guide References

3.2.1.41 System Prompts

◆ Directory Listing

If set to "Yes", the subscriber's name and extension number will be listed in the directory (Dialling by Name).

Note

This setting is not available for COS 66 (System Manager).

Value Range

No, Yes

Feature Guide References

3.2.1.16 Dialling by Name

◆ Tutorial

The tutorial is a series of voice prompts for setting up the mailbox that is played to subscribers when they first log in to their mailbox. This item specifies if subscribers in the Class of Service hear a normal tutorial, a simplified tutorial, or no tutorial when they first log in to their mailbox.
In the tutorial, subscribers are asked to provide:
– A password
– The mailbox owner's name
– Personal Greetings (No Answer Greeting, Busy Signal Greeting, After Hours Greeting)

Value Range

Normal: A navigation voice menu is given for each step.
Simplified: Only direct prompts are given for making each setting. For Personal Greetings, only a No Answer Greeting can be set.
None: No tutorial is played and settings for the mailbox must be made manually.

Feature Guide References

3.2.2.27 Subscriber Tutorial

◆ Call-through Service

Specifies if subscribers in the Class of Service can make outside calls by accessing the subscriber service menu (from an outside telephone) and dialling an outside destination.

Value Range

Yes, No

Feature Guide References

3.2.2.5 Call-through Service

◆ Remote Call Forward to CO

Select if subscribers in the Class of Service can perform a Remote Call Forward to CO.

Value Range

Yes, No

Feature Guide References

3.2.2.26 Remote Call Forwarding Set

◆ E-mail Option

Specifies if subscribers in the Class of Service can receive notifications by e-mail when they have a new message waiting.

Value Range

Yes, No

Feature Guide References

3.2.1.28 Message Waiting Notification—E-mail Device

◆ Desktop Messaging

Specifies if subscribers in the Class of Service can access the contents of their mailboxes with an e-mail application using IMAP. This includes the Microsoft Outlook® e-mail client plug-in.

Value Range

Yes, No

◆ System Manager Authority

Specifies if subscribers in the Class of Service have access to the Unified Messaging system as a System Manager.

Value Range

Yes, No

Feature Guide References

3.1.1 Unified Messaging System Overview

◆ Message Manager Authority

Specifies if subscribers in the Class of Service have access to the Unified Messaging system as a Message Manager.

Value Range

Yes, No

Feature Guide References

3.1.1 Unified Messaging System Overview

◆ Remote Call Forward to CO

Select if subscribers in the Class of Service have allowed to do Remote Call Forward to CO.

Value Range

Yes, No

Feature Guide References

3.1.1 Unified Messaging System Overview

Mailbox

◆ Personal Greeting Length (s)

Defines the maximum length (in seconds) of Personal Greetings for subscribers in the Class of Service.

Note

This setting is not available for COS 65 (Message Manager) and COS 66 (System Manager).

Value Range

1–360 s

Feature Guide References

3.2.2.22 Personal Greetings

◆ Message Length (Selection)

Specifies if the length of messages left for subscribers in the Class of Service are unlimited in duration or have a specified time limit. If set to "Unlimited", the maximum recording time is 60 minutes, and the maximum recording time for two-way conversations (Two-way Record and Two-way Transfer) is unlimited.

Value Range

Unlimited, Limited

◆ Message Length (Limited) (min)

Specifies the maximum recording time for messages left to subscribers in the Class of Service. Only specified if ◆ **Message Length (Selection)** is set to "Limited".

Value Range

1–60 min

◆ Mailbox Capacity Maximum Message Time (Selection)

Specifies if a maximum limit is applied to the total amount of messages (new and saved) for mailboxes of subscribers in the Class of Service.

Value Range

Unlimited, Limited

◆ Mailbox Capacity Maximum Message Time (Limited) (min)

Specifies the total number of available minutes for storing messages (both new and saved) for mailboxes of subscribers in the Class of Service. Only specified if **Mailbox Capacity Maximum Message Time (Selection)** is set to "Limited".

Value Range

1–600 min

◆ New Message Retention Time (Selection)

Specifies if a retention time limit is applied to new messages in mailboxes of subscribers in the Class of Service. If "Unlimited" is selected, new messages will remain in the mailbox until erased by the subscriber.

Value Range

Unlimited, Limited

◆ New Message Retention Time (Limited) (days)

Defines the number of days that new messages will remain in mailboxes for subscribers in the Class of Service. The storage period begins the day after the message reception. Only specified if **New Message Retention Time (Selection)** is set to "Limited".

Value Range

1–30 days

◆ Saved Message Retention Time (Selection)

Specifies if a retention time limit is applied to saved messages in mailboxes of subscribers in the Class of Service. If "Unlimited" is selected, saved messages will remain in the mailbox until erased by the subscriber.

Value Range

Unlimited, Limited

◆ Saved Message Retention Time (Limited) (days)

Defines the number of days that saved messages will remain in mailboxes for subscribers in the Class of Service. Only specified if **Saved Message Retention Time (Selection)** is set to "Limited".

Value Range

1–30 days

◆ Message Retrieval Order

Specifies the order in which messages will be retrieved for subscribers in the Class of Service (played back for listening).

Value Range

LIFO: Messages are retrieved starting with the most recent (Last In First Out).
FIFO: Messages are retrieved starting with the oldest (First In First Out).

◆ Number of CIDs for Caller Name Announcement (Selection)

Specifies if subscribers in the Class of Service can assign telephone numbers for the Personal Caller Name Announcement feature.

Note

This setting is not available for COS 65 (Message Manager) and COS 66 (System Manager).

Value Range

None, Other

◆ Number of CIDs for Caller Name Announcement (Other)

Specifies the maximum number of telephone numbers that subscribers in the Class of Service can assign for the Personal Caller Name Announcement feature. Only specified if **Number of CIDs for Caller Name Announcement (Selection)** is set to "Other".

Value Range

1–30

◆ Message Envelope Setting

Specifies when message envelopes (message date and time, name of the person who recorded or transferred the message, telephone number of the caller) are announced.

Value Range

Before: The system announces the message envelope before playing the recorded message.
After: The system announces the message envelope after playing the recorded message.
Require: The system announces the message envelope when the user presses the appropriate dial key as prompted when listening to the message.

◆ Mailbox Capacity Warning (Selection)

Specifies if the system alerts mailbox subscribers in the Class of Service that the programmed recording time for their mailboxes is reaching its set amount of message storage time. If set to "None", the warning will not be announced.

Value Range

None, Other

◆ Mailbox Capacity Warning (Other) (min)

Specifies when the system alerts mailbox subscribers in the Class of Service that the programmed recording time for mailboxes is reaching its set amount of message storage time. The setting indicates the remaining recording time capacity threshold for when the announcement is heard. Only specified if **Mailbox Capacity Warning (Selection)** is set to "Other".

Value Range

1–60 min

◆ Play System Prompt after Personal Greeting

If set to "Yes", directions for recording a message are given to the caller immediately after the personal greeting of the subscriber in the Class of Service has been played.

Note

This setting is not available for COS 65 (Message Manager) and COS 66 (System Manager).

Value Range

No, Yes

◆ Message Cancel for Live Call Screening

If set to "Yes", the caller's message will be deleted when a subscriber in the Class of Service answers a call via Live Call Screening while the caller is leaving a message.

Note

This setting is not available for COS 66 (System Manager).

Value Range

No, Yes

Feature Guide References

3.2.2.16 Live Call Screening (LCS)

◆ Delete Message Confirmation

If set to "Yes", the system requests confirmation from subscribers in the Class of Service before erasing a message in the mailbox. If set to "No", the message is erased immediately.

Value Range

No, Yes

◆ Personal Greeting for Caller ID

If set to "Yes", subscribers in the Class of Service can record personal greetings that are played for specific callers only (Personal Greeting for Caller ID).

Note

This setting is not available for COS 65 (Message Manager) and COS 66 (System Manager).

Value Range

No, Yes

Feature Guide References

3.2.2.22 Personal Greetings

◆ Caller ID Callback

If set to "Yes", subscribers in the Class of Service can call the caller back while listening to the caller's message (Caller ID Callback).

Value Range

No, Yes

Feature Guide References

3.2.2.9 Caller ID Callback

◆ Auto Receipt

If set to "Yes", subscribers in the Class of Service can request to receive confirmation when their message has been listened to by the message recipient.

Value Range

No, Yes

Feature Guide References

3.2.2.1 Auto Receipt

◆ Autoplay New Message

If set to "Yes", the system plays new messages automatically when subscribers in the Class of Service log into their mailboxes.

Value Range

No, Yes

◆ Play New Messages Sequentially

If set to "Yes", the system plays all new messages for subscribers in the Class of Service sequentially without system prompts. The subscriber's Service Top Menu will be heard after all of the messages are played. This feature is only available when **Autoplay New Message** is set to "Yes".

Value Range

No, Yes

◆ First Playback Urgent Message

If set to "Yes", the system plays urgent messages before regular messages for subscribers in the Class of Service.

Value Range

No, Yes

Feature Guide References

3.2.2.31 Urgent Message

◆ Announce Message Transferred Information

If set to "Yes", the system plays the information of transferred messages to subscribers in the Class of Service before playing the messages.

Value Range

No, Yes

◆ Caller ID Number Announcement

Specifies whether or not the system announces the Caller ID number when a subscriber in the Class of Service plays a message left by a caller, if their name has not been recorded for the Caller Name Announcement feature. If the name has been recorded, it will be announced regardless of this setting.

Note

If "Caller ID Callback" is set to "Yes", Caller ID numbers will be announced regardless of this setting (see **21.1 UM Configuration—[2] Class of Service—Mailbox—◆ Caller ID Callback**).

Value Range

No, Yes

◆ Announce Option Menu after Erasing Message

If set to "Yes", the system plays the option menu after erasing a message for subscribers in the Class of Service. If set to "No", the system plays the next message automatically without playing the option menu.

Value Range

No, Yes

◆ New Message Length Announcement

If set to "Yes", the system announces the total length of new messages when the number of new messages is announced for subscribers in the Class of Service.

Value Range

No, Yes

◆ Password Expiry Period (Selection)

Specifies if the mailbox passwords for subscribers in the Class of Service will expire after a set time.

Value Range

Disable, Other

Feature Guide References

3.1.2.4 Password Administration

◆ Password Expiry Period (Other)

Specifies the number of days a set mailbox password will be used before it expires and the system prompts the subscriber for a new password. This feature is only available when **Password Expiry Period (Selection)** is set to "Other".

Value Range

5–200 days

Feature Guide References

3.1.2.4 Password Administration

◆ Two-way Recorded Message Save Mode

Specifies whether two-way recording sessions are saved in the mailboxes of subscribers in the Class of Service as "old" or "new" messages.

Value Range

Save as Old, Save as New

Feature Guide References

3.2.2.30 Two-way Record/Two-way Transfer

Call Transfer

◆ Intercom Paging Group

Specifies the Intercom Paging group number available to subscribers in the Class of Service.

Note

This setting is not available for COS 65 (Message Manager).

Value Range

1–32, ALL

PC Programming Manual References

24.4 UM Configuration—[5-4] System Parameters—Parameters—Intercom Paging Parameters

◆ Use Call Waiting on Busy

If set to "Yes", the system signals subscribers in the Class of Service when they are on a call and another call is received.

Note

This setting is not available for COS 65 (Message Manager).

Value Range

No, Yes

◆ Caller ID Screen

If set to "Yes", subscribers in the Class of Service can hear the pre-recorded names of callers when they receive calls (Caller ID Screening).

Note

This setting is not available for COS 65 (Message Manager).

Value Range

No, Yes

Feature Guide References

3.2.1 System Features—3.2.1.9 Caller ID Screening

◆ Notify of Transfer

If set to "Yes", subscribers in the Class of Service will hear "You have a call." when they answer transferred calls.

Value Range

No, Yes

◆ Call Transfer to Outside

If set to "Yes", the system allows calls to be transferred to a trunk via the following features: Custom Service, Caller ID Callback, Call Transfer Service, Personal Custom Service, Call-through Service.

Note

This setting is not available for COS 65 (Message Manager).

Value Range

No, Yes

Feature Guide References

3.2.1.7 Call Transfer to Outside

Hospitality Mode

◆ Hospitality Mode

Specifies whether subscribers in the Class of Service have the Hospitality Mode enabled. (For use with extensions for hotel rooms, etc.) This setting must be set to "Yes" to enable other Hospitality Mode settings. When this item is set to "Yes", only the following options are made available to subscribers:

- Listen to Messages
- Password
- Personal Greetings
- Owner Name

Value Range

No, Yes

Feature Guide References

3.2.1.21 Hospitality Mode

◆ Password

Specifies if subscribers in the Class of Service are given a voice prompt selection to change their password when accessing their mailbox.

Value Range

No, Yes

PC Programming Manual References

20.1.2 UM Configuration—[1-2] Mailbox Settings—Full Setting—◆ Mailbox Password

Feature Guide References

3.2.1.21 Hospitality Mode

◆ Personal Greeting

Specifies if subscribers in the Class of Service are given a voice prompt selection to change their Personal Greeting when accessing their mailbox.

Note

For the Personal Greeting of subscribers in a Class of Service with Hospitality mode enabled, only No Answer and Busy greetings can be set.

Value Range

No, Yes

Feature Guide References

3.2.1.21 Hospitality Mode
3.2.2.22 Personal Greetings

◆ Owner Name

Specifies if subscribers in the Class of Service are given a voice prompt selection to change the mailbox owner's name when accessing their mailbox.

Value Range

No, Yes

Feature Guide References

3.2.1.21 Hospitality Mode

◆ Erase When Check Out - Password

Specifies if the password of the subscriber in the Class of Service is erased when the subscriber's extension is set to the "Check Out" status.

Value Range

No, Yes

Feature Guide References

2.23.1 Hospitality Features—SUMMARY
3.2.1.21 Hospitality Mode

◆ Erase When Check Out - Personal Greeting

Specifies if the Personal Greeting of the subscriber in the Class of Service is erased when the subscriber's extension is set to the "Check Out" status.

Value Range

No, Yes

Feature Guide References

2.23.1 Hospitality Features—SUMMARY

3.2.1.21 Hospitality Mode

◆ Erase When Check Out - Owner Name

Specifies if the Owner Name of the subscriber in the Class of Service is erased when the subscriber's extension is set to the "Check Out" status.

Value Range

No, Yes

Feature Guide References

2.23.1 Hospitality Features—SUMMARY
3.2.1.21 Hospitality Mode

Section 22

UM Configuration—[3] UM Extension / Trunk Service

This section serves as reference operating instructions for the Port/Trunk Service menu of the UM Configuration menu of the Setup screen of Web Maintenance Console.

22.1 UM Configuration—[3-1] UM Extension / Trunk Service—Service Group

The parameters of Service Groups determine how calls are handled throughout the day. Each Service Group (therefore each port) can have a different call service for each time mode (day, night, lunch, break). One of 5 incoming call services (Voice Mail, Automated Attendant, Interview, Custom Service or Transfer to Mailbox) can be assigned to each call service.
Once one or more service groups are set, you can assign the service groups to each UM port in **22.2 UM Configuration—[3-2] UM Extension / Trunk Service—Port Assignment**.

◆ Day, Night, Lunch, and Break Mode - Company Greeting No. (Selection)

Specifies the greeting to be heard by callers, the System Greeting, another message, or no greeting. The System Greeting is "Good morning/Good afternoon/Good evening. Welcome to the Unified Messaging System.". Each call service can have its own setting.

Value Range

None, System, Other

Feature Guide References

3.2.1.12 Company Greeting

◆ Day, Night, Lunch, and Break Mode - Company Greeting No. (Other)

Specifies the number of the greeting message to use when "Other" is specified for the greeting selection.

Value Range

1–32

Feature Guide References

3.2.1.12 Company Greeting

◆ Day, Night, Lunch, and Break Mode - Incoming Call Service

Specifies the incoming call service used to handle calls.

Value Range

Voice Mail Service, Automated Attendant, Interview Mailbox, Custom Service, Transfer to Mailbox

◆ Day, Night, Lunch, and Break Mode - Incoming Call Service Parameter

Specifies the parameter for the type of Incoming Call Service specified. This is disabled if "Voice Mail Service" or "Automated Attendant" is selected for the Incoming Call Service.

Value Range

Interview Mailbox: Mailbox number
Custom Service: Custom Service number (1–200)
Transfer to Mailbox: Mailbox number

Note

Mailbox numbers are between 2 digits and the value set in ◆ **Mailbox No. Max. Length (3-8)**.

◆ Day, Night, Lunch, and Break Mode - Incoming Call Service Prompt

Specifies the language of system prompts used by this call service. If set to "Primary", the default language which is selected from all installed languages will be used. When set to "Selective", the caller can select the language of his or her choice, provided the System Administrator or the Message Manager has recorded the Multilingual Selection Menu. To specify a Prompt Selection Number, see **24.4 UM Configuration—[5-4] System Parameters—Parameters—Prompt Setting**.

Note

If "Selective" is specified, you will need to select a prompt available for callers that cannot input DTMF signals, such as rotary phone callers. See "Prompt for No DTMF Input Callers" below.

Value Range

Primary, Selective, Guidance No. 1–8

PC Programming Manual References

24.4 UM Configuration—[5-4] System Parameters—Parameters—Prompt Setting—◆ Primary Language

Feature Guide References

3.2.1.41 System Prompts

◆ Day, Night, Lunch, and Break Mode - Prompt for No DTMF Input Callers

Specifies which language is used when a caller cannot enter any digits to select a language after the Multilingual Selection Menu has been played. If set to "Primary", the default language which is selected from all installed languages will be used.

Value Range

Primary, Guidance No. 1–8

PC Programming Manual References

24.4 UM Configuration—[5-4] System Parameters—Parameters—Prompt Setting—◆ Primary Language

Feature Guide References

3.2.1.41 System Prompts

◆ Day, Night, Lunch, and Break Mode - Delayed Answer Time

Specifies whether the Unified Messaging system answers calls on the port or trunk immediately (0) or after a delay (1 s–60 s).

Value Range

0–60 s

22.2 UM Configuration—[3-2] UM Extension / Trunk Service—Port Assignment

You can assign a Service Group created in **22.1 UM Configuration—[3-1] UM Extension / Trunk Service—Service Group** to each UM port.

1. For each UM port number, select a Service Group number (1–64) from the **Service Group** drop-down list.
2. Click **OK** when finished.

Section 23

UM Configuration—[4] Service Settings

This section serves as reference operating instructions for the Service Settings menu of the UM Configuration menu of the Setup screen of Web Maintenance Console.

23.1 UM Configuration—[4-1] Service Settings—Caller ID / PIN Call Routing

A maximum of 200 Caller ID/PIN numbers can be assigned so that callers are automatically forwarded to a pre-programmed destination. A different destination can be set for each time mode (day, night, lunch, break). For **Mode**, select **Caller-ID Mode** or **PIN Mode** from the drop-down list, and then click the button to assign a routing destination. PIN Call Routing is only available when the ◆ **Call Transfer Anytime** of a Custom Service is set to "PIN".

Wild card input for Caller IDs/PINs

- The wild card, "✳", can be used as a substitute for any numbers in the following ways.
  1. When Caller ID/PIN numbers include one "✳":
     "✳" matches any number, regardless of the actual numbers of digits. For example, registering "✳" by itself matches all numbers, and registering "201 ✳" matches any number that starts with "201".
  2. When Caller ID/PIN numbers include more than one "✳":
     Each "✳" matches a single digit. For example, registering "✳✳✳✳✳✳✳✳✳✳" matches any 10-digit number, and registering "201✳✳✳✳✳✳✳" matches any 10-digit number that starts with "201".

Note

- If Automatic Login or Holiday Service is used, these will take priority over Caller ID Call Routing settings. Also note that Caller ID Call Routing takes priority over the Trunk Service and Port Service.
- Received Caller ID/PIN numbers are searched for in each service setting table in order from the first registered number to last. When programming Caller ID/PIN routing, note the order of registration, and remember that wild card entries should be entered after any specific routing entries.

Caller-ID Mode

◆ Caller ID No. (Selection)

Specifies the Caller ID number setting so that callers are automatically forwarded to a pre-programmed destination.

Value Range

Private, Out of Area, Long Distance, Others

Feature Guide References

3.2.1.8 Caller ID Call Routing

◆ Caller ID No. (Other)

Specifies a Caller ID number (or range of numbers using the wild card, "✳") for callers from a specific number or range of numbers that are to be automatically forwarded to a pre-programmed destination. Only specified if ◆ **Caller ID No. (Selection)** is set to "Others".

Value Range

0–9, ✳ (Max. 20 digits)

Feature Guide References

3.2.1.8 Caller ID Call Routing

◆ Description

Specifies a name and/or description of the Caller ID number.

Note

When no data is specified in this parameter, the caller's name will be automatically entered here if the caller's name is received from the telephone company.

Value Range

Max. 20 characters

Feature Guide References

3.2.1.8 Caller ID Call Routing

◆ Call Transfer for Day, Night, Lunch, and Break service

Specifies the destination to which the call from an assigned Caller ID number is automatically forwarded. A destination can be set for each time mode. To disable the setting, select "None". A Mailbox Group number can be entered here instead of a mailbox number.

Value Range

None: disables this feature.
Custom Service Menu: forwards callers to the specified Custom Service menu.
Extension: forwards callers to the specified extension.
Mailbox: forwards callers to the specified mailbox.

Feature Guide References

3.2.1.8 Caller ID Call Routing

PIN Mode

◆ PIN No.

Specifies a PIN number (or range of PIN numbers using the wild card, "✳") for callers from a specific number or range of numbers that are to be automatically forwarded to a pre-programmed destination. For more information on using "✳" with pin numbers, refer to **Wild card input for Caller IDs/PINs**.

Value Range

0–9, ✳ (Max. 20 digits)

Feature Guide References

3.2.1.35 PIN Call Routing

◆ Description

Specifies a name and/or description of the PIN number.

Value Range

Max. 20 characters

Feature Guide References

3.2.1.35 PIN Call Routing

◆ Call Transfer for Day, Night, Lunch, and Break service

Specifies the destination to which the call using an assigned PIN number is automatically forwarded. A destination can be set for each time mode. To disable the setting, select "None". A Mailbox Group number can be entered here instead of a mailbox number.

Value Range

None: disables this feature.
Custom Service Menu: forwards callers to the specified Custom Service menu.
Extension: forwards callers to the specified extension.
Mailbox: forwards callers to the specified mailbox.

Feature Guide References

3.2.1.35 PIN Call Routing

23.2 UM Configuration—[4-2] Service Settings—Parameters

Automated Attendant

◆ Wait Time for First Digit (0-20 s)

Specifies the length of time the system waits for the caller to dial a digit before assuming the caller cannot input a DTMF signal and therefore activates No DTMF Input Call Coverage

Value Range

0–20 s

◆ Menu Repeat Cycle (1-5 times)

Specifies the number of times the system will play the Automated Attendant top menu if the caller does not make a selection.

Value Range

1–5 times

Feature Guide References

3.2.1.3 Automated Attendant (AA)

◆ Play Owner's Name during Transfer

Determines whether "Transferring you to (name)" is announced to the caller before transferring the caller to an extension.

Value Range

Enable, Disable

Feature Guide References

3.2.1.3 Automated Attendant (AA)

◆ Operator Service

When operator calls are made, calls are connected to the lowest-numbered operator that is available. To enable/disable the operator setting for each time mode, check/uncheck it.

Note

- The extension assigned as Operator 1 for day mode is automatically designated as the Message Manager. Because the extension number assigned for Operator Service No. 1 in the Day Mode is for the Message Manager, you cannot assign this extension to any other mailbox.
- Extensions assigned as operators can be called by dialling [0], however, when setting features such as Message Waiting Notification and Remote Call Forwarding, the extension number (not "0") must be specified.

Value Range

Operator Service for Day, Operator Service for Night, Operator Service for Lunch, Operator Service for Break

PC Programming Manual References

10.2 PBX Configuration—[2-2] System—Operator & BGM—◆ PBX Operator—Day, Lunch, Break, Night

Feature Guide References

3.2.1.34 Operator Service

◆ Operator Service—Operator's Extension

Specifies the extension number for Operator 1, 2, and 3 for the checked time setting.

Note

- The default extension number of Operator 1 in day mode cannot be used with the Message Waiting Notification Lamp feature.
- Since the extension number assigned as Operator Service No. 1 for Day is automatically designated as the Message Manager (mailbox number 998), do not assign an individual mailbox to this extension number. Assigning an individual mailbox to this extension will result in the following operations:
  - Any messages recorded for the extension will be sent to the Message Manager mailbox instead of the extension's assigned mailbox.
  - The Message Manager COS (65) will be applied to call transfers, etc., instead of the COS of the assigned mailbox.
  - If the extension user tries to access their mailbox using the Automatic Login feature, the user will access the Message Manager mailbox instead of the assigned mailbox.

Value Range

1–8 digits

Feature Guide References

3.2.1.34 Operator Service

◆ Operator Service—Operator's Mailbox

Specifies the mailbox number for Operator 1, 2, and 3. Callers to Operator 1, 2, or 3 are prompted to leave a message in this mailbox depending upon how the Busy Coverage Mode or No Answer Coverage Mode is set.

Value Range

2–8 digits

Feature Guide References

3.2.1.34 Operator Service

◆ Operator Service—Busy Coverage Mode

Specifies how to handle calls when the operator is busy.

Value Range

Hold: Automatically places the caller on hold and the operator is called again.
No Answer Coverage: Offers the option specified by the No Answer Coverage Mode to the caller.
Call Waiting: Signals the operator when another call is waiting using the Call Waiting feature of PBX.
Disconnect Message: Disconnects the caller after playing "Thank you for calling".

Feature Guide References

3.2.1.34 Operator Service

◆ Operator Service—No Answer Coverage Mode

Specifies how to handle operator calls when they are not answered within the time period set in ◆ **Operator Service—Operator No Answer Time (10-60 s)**.

Value Range

Caller Select: Allows the caller to leave a message or call another extension. In the following cases, the caller cannot call another extension:

a. No input to Automated Attendant.

b. When the ◆ **No DTMF Input Operation** setting of a Custom Service is set to "Operator".

Leave Message: Instructs the caller to leave a message in the operator's mailbox.
Disconnect Message: Disconnects the caller after playing "Thank you for calling.".
Next Operator: Transfers the caller to the next operator.

PC Programming Manual References

20.1.2 UM Configuration—[1-2] Mailbox Settings—Full Setting—◆ No DTMF Input Operation

Feature Guide References

3.2.1.34 Operator Service

◆ Operator Service—Operator No Answer Time (10-60 s)

When a call to an operator is not answered within the time set, the system will offer other options as defined by ◆ **Operator Service—No Answer Coverage Mode**.

Note

- This time applies to Operator 1, 2, and 3.
- If more than one operator is assigned, we recommend setting this value to 15 s.

Value Range

10–60 s

Feature Guide References

3.2.1.34 Operator Service

◆ Call Hold Mode

If **Call Hold Mode** is checked, the system gives callers the option of either holding for a specific extension or selecting one of several Incomplete Call Handling Service options. While on hold, the system periodically gives callers the choice to either continue to hold or select one of the Incomplete Call Handling Service options. If **Call Hold Mode** is not checked, the system immediately offers callers the Incomplete Call Handling Service and callers are not put on hold.

Value Range

Enable (checked), Disable (unchecked)

Feature Guide References

3.2.1.3 Automated Attendant (AA)

◆ Call Hold Mode—Call Queuing Announcement Mode

If set to "Enable", callers on hold are informed of their current position in the call hold queue.
Example: "One other person is waiting to connect."

Value Range

Enable, Disable

Feature Guide References

3.2.1.3 Automated Attendant (AA)

◆ Call Hold Mode—Call Retrieval Announcement Timing (1-30 s)

Specifies the interval between the voice guidance message that asks whether or not calls are to be retrieved during call holding.
Example: "To cancel holding, press 2 now. Otherwise, I'll try your party again."

Value Range

1–30 s

Feature Guide References

3.2.1.3 Automated Attendant (AA)

◆ Alternate Extension

Specifies extensions that require a different transfer sequence than normal. Calls to these extensions will be transferred according with the setting for **24.4 UM Configuration—[5-4] System Parameters—Parameters—◆ PBX Environment—Alternate Extension Transfer Sequence (Up to 16 digits / [0-9 * # D R F T X , ;])**.Click **Edit** and follow the steps below to edit an alternate extension.

Adding an Alternate Extension

1. Click **New**.
2. Enter an extension number.
3. Click **OK**.

Editing an Alternate Extension

1. Select the desired alternate extension.
2. Click **Edit**.
3. Edit the extension number.
4. Click **OK**.

Deleting an Alternate Extension

1. Select the desired alternate extension.
2. Click **Delete**.
3. Click Yes.

Changing the order of Alternate Extensions

Select an extension and click **Move up** or **Move down** to change its order in the list. Alternate extensions will be dialled in order from top to bottom.

Note

Extension Groups and Logical Extensions cannot be assigned.

Value Range

Max. 32 extensions (max. 5 digits per extension)

PC Programming Manual References

24.4 UM Configuration—[5-4] System Parameters—Parameters—◆ PBX Environment—Alternate Extension Transfer Sequence (Up to 16 digits / [0-9 * # D R F T X , ;])

Feature Guide References

3.2.1.3 Automated Attendant (AA)

◆ List All Names

If set to "Enable", callers can listen to all subscriber names and extension numbers in the Automated Attendant service or Custom Service.

Value Range

Enable, Disable

Feature Guide References

3.2.1.3 Automated Attendant (AA)

◆ Operator Transfer Mode

Specifies the timing of the operator transfer.

Value Range

Transfer immediately, Do not transfer immediately

Feature Guide References

3.2.1.3 Automated Attendant (AA)

No DTMF Input Operation

◆ No DTMF Input Call Coverage for Day, Night, Lunch, and Break (Selection)

Specifies where a caller will be transferred when there is no DTMF input in response to system guidance (for example, the caller is using a rotary phone) for each time mode.

Value Range

G.D.M.: The caller is transferred to the General Delivery Mailbox.
Operator: The caller is transferred to an operator.

Mailbox: The caller is transferred to the designated mailbox extension.
Extension: The caller is transferred to the designated extension.

Feature Guide References

3.2.1.32 No DTMF Input Operation

◆ No DTMF Input Call Coverage for Day, Night, Lunch, and Break (Parameter)

Specifies the transfer destination if "Mailbox" or "Extension" is selected for ◆ **No DTMF Input Call Coverage for Day, Night, Lunch, and Break (Selection)**.

Value Range

2–8 digits (for extensions)
2–[the value set in ◆ **Mailbox No. Max. Length (3-8)**] digits (for mailboxes)

Feature Guide References

3.2.1.32 No DTMF Input Operation

Name Entry

◆ Number of Digits to Entry Name (3-4 digits)

Specifies the number of digits (letters) that must be entered when using the Dial by Name feature, which allows callers to connect themselves with the desired party by entering the first 3 or 4 letters of the party's name.

Value Range

3–4 digits

Feature Guide References

3.2.1.16 Dialling by Name

◆ Name Entry Time Out (1-10 s)

Specifies the length of time that the system waits for the caller to enter the first 3 or 4 digits (letters) of the desired party's name. If the required number of digits are not dialled within this time, the previous menu will be played again for the caller.

Value Range

1–10 s

Feature Guide References

3.2.1.16 Dialling by Name

◆ Key Mode

Specifies the standard used for keypad text entry. If set to use the North American Standard, press [7] for "Q" and [9] for "Z", If set to use the Australasian Standard, press [1] for "Q" and "Z".

Value Range

North American Standard, Australasian Standard

Feature Guide References

3.2.1.16 Dialling by Name

◆ Name Directory Mode

Specifies one of Last Name, First Name, or Both to be used when entering the name.

Value Range

Last, First, Both

Feature Guide References

3.2.1.16 Dialling by Name

Toll Saver

◆ Delayed Answer Time for New Message (5-60 s)

Specifies the time period before the system answers the call when there are new messages.

Value Range

5–60 s

◆ Delayed Answer Time for No New Message (5-60 s)

Specifies the time period before the system answers the call when there are no new messages.

Value Range

5–60 s

Feature Guide References

3.2.2.29 Toll Saver

23.3 UM Configuration—[4-3] Service Settings—Custom Service

A Custom Service allows callers to perform specific functions by pressing dial buttons on their telephones while listening to voice guidance (Custom Service Menu). Custom Services allow callers to connect themselves to an extension, mailbox, Mailbox Group, operator, fax machine, etc., without the assistance of an operator. A Custom Service Menu ("Press 1 for Sales, press 2 for Service", etc.) can be recorded by the System Manager or the Message Manager, and can be recorded in several languages if needed. The System Manager can create a maximum of 200 Custom Services.
Common uses for Custom Services include:

– callers press a button to connect themselves with the desired destination
– callers press buttons to navigate through a series of other Custom Services before being connected with the desired destination
– callers enter PIN numbers to connect themselves with the desired destination (PIN Call Routing)
– callers enter the first few letters of the desired parties (Dial by Name) to connect themselves with the desired destination

Custom Service Builder

The Custom Service Builder is a utility that allows the System Administrator to create Custom Services visually. Each Custom Service and its functions can be edited, arranged using a familiar drag-and-drop interface. The following Custom Service types are available:

– Menu & Transfer
– Date Control
– Time Control
– Day Control
– Password

Creating a Custom Service

1. Click the desired Custom Service type under **Custom Service Type**.
2. Click on an area within the workspace to the right of the menu to place the Custom Service (it can be moved later).
3. Double-click the Custom Service icon you placed in the grid.
4. Edit the parameters in the Custom Service parameters dialogue box.
5. Click **OK**.

Note

If you are using Windows Internet Explorer, and you become unable to create new Custom Services with the Custom Service Builder, click the browser's Refresh button.

Editing a Custom Service

Custom Services parameters can be connected to other Custom Services. To connect a parameter to another Custom Service, click and hold the parameter's blue handle, drag it to the desired Custom Service, then release the mouse button.
You can edit each Custom Service in the following ways.

[From the Custom Service List]

1. Enter the desired Custom Service number under **Quick Search** and click **Edit Custom Service**.
2. Edit the parameters in the Custom Service parameters dialogue box.
3. Click **OK**.

[From the Custom Service Diagram]

1. Double-click the desired Custom Service icon in the diagram, or right-click on the desired icon and select **Edit**.
2. Edit the parameters in the Custom Service parameters dialogue box.
3. Click **OK**.

Example: Setting "Menu & Transfer"

1. Click **Menu & Transfer** under **Custom Service Type** and drag it to the right side of the screen.
2. Drop **Menu & Transfer** on to a position of your choice in the Custom Service diagram. The parameters dialogue box for the Custom Service opens.
3. Enter or select a value for each item.
   For each parameter, refer to the description in the following section.
4. Click **Record A Prompt For This Custom Service**.
   This feature is only available when setting "Menu & Transfer" or "Password". You can also skip this step, and go to step **7**.
5. Select **Record from extension** or **Import from recorded file**.
   *When **Record from extension** is selected:*
   1. Specify the extension number of the telephone used for recording, then click **Connect**.
   2. When the specified extension rings, go off-hook.
   3. Click **Record**, **Play**, or **Stop** to record or play a voice label through the extension.
   4. Click **Disconnect**.
   5. Click **OK**.

   *When **Import from recorded file** is selected:*
   1. Click the folder icon.
      The **Open** dialogue box appears.
   2. Navigate to the folder containing the WAV files you want to open.
      WAV files must meet the following specifications:
      – G.711 PCM codec
      – 8 kHz, 8-bit sampling rate
      – Monaural
      – A-law or μ-law encoding
   3. Select the desired WAV file.
   4. Click **Open**.
6. Click **OK**.
7. Click **OK**.

23.3.1 UM Configuration—[4-3] Service Settings—Custom Service—Menu & Transfer

The below parameters are set for the Menu Transfer Custom Service in the Custom Service Builder.
This Custom Service type guides callers to press certain buttons to connect themselves with the designated party. The prompt for this service can be recorded in the CS No. dialogue box.
Custom Service prompts can be recorded only in On-line mode.

◆ Description

The information typed in this field is for reference only.

Value Range

Max. 32 characters

Feature Guide References

3.2.1.15 Custom Service

◆ Prompt Mode

Specifies the language for prompts used by this Custom Service.

Note

- This parameter overrides a set "Incoming Call Service Prompt".
- If "Primary" is selected, the default language which is selected from all installed languages will be used.
- If "None" is selected, the prompt mode of previous process will be continued, or "Primary" language will be selected.

Value Range

None, Primary, Guidance No. 1-8

PC Programming Manual References

22.1 UM Configuration—[3-1] UM Extension / Trunk Service—Service Group—◆ Day, Night, Lunch, and Break Mode - Incoming Call Service Prompt

Feature Guide References

3.2.1.15 Custom Service

◆ Menu Repeat Cycle (1-3)

Specifies the number of times the Custom Service menu message will be repeated for the caller.

Value Range

1–3 times

Feature Guide References

3.2.1.15 Custom Service

◆ Call Transfer Anytime

Specifies the type of dialling that the system accepts during the Custom Service in addition to the single-digit Custom Service options. This setting allows callers to dial numbers to connect themselves to an extension or mailbox or enter a PIN.

Note

If you only need to allow callers to dial single-digit Custom Service option numbers, set this parameter to "No". When set to a value other than "No", the system always waits for the amount determined by the **Wait for Second Digit (1-5 s)** setting before handling the call. This will cause a delay between the time the caller dials a single-digit Custom Service option number and when the call is actually handled.

Value Range

Extn: enables callers to be transferred directly to their intended party by dialling the extension number.
Mbx: enables callers to leave messages in a mailbox by entering the mailbox number.
PIN: enables callers to be transferred directly to the specified party according to the setting for PIN Call Routing Service by dialling a PIN.
No: disables extension transfer and mailbox transfer; only 1-digit entries will function (following the Custom Service menu)

Feature Guide References

3.2.1.15 Custom Service

◆ Wait for First Digit (0-10 s)

Specifies the length of time that the system waits for the caller to dial the first digit after a Custom Service menu is played for the caller. If this time expires, the No DTMF Operation settings determines how the call is then handled. If this parameter is set to "0", No DTMF Input Operation handles the call immediately after the menu is played for the caller.

Value Range

0–10 s

Feature Guide References

3.2.1.15 Custom Service

◆ Wait for Second Digit (1-5 s)

This parameter is only valid when **Call Transfer Anytime** is set to a value other than "No". After the caller dials a digit (the first digit) after listening to a Custom Service menu, the system waits for a second digit to be dialled. This gives the caller time to continue dialling a mailbox number, extension number, or PIN. If this time expires without a second digit being entered, the system assumes the caller has selected a Custom Service menu option and handles the call according to the digit dialled by the caller.

Value Range

1–5 s

Feature Guide References

3.2.1.15 Custom Service

◆ No DTMF Input Operation

Determines how calls are handled when callers do not dial any numbers after listening to the menu message (most likely because they are using rotary telephones) The default setting is "Operator", which allows the caller to be automatically connected to an operator after the menu message plays back ("Press the desired number, or stay on the line to be connected to an operator.").

Value Range

Trf to Mbx: Allows the caller to leave messages in a specified mailbox.
Trf to Ext: Transfers the caller to a specified extension.
Operator: Connects the caller to an operator.
Trf to Out: Transfers the caller to a specified outside telephone number. Enter the trunk access number of the PBX then the destination telephone number.
Exit: Plays the Custom Service exit prompt and disconnects the caller.
Prev Menu: Returns the caller to the previous menu (if there was a previous menu).
CS: Transfers the caller to the Custom Service specified here.

Feature Guide References

3.2.1.15 Custom Service

◆ Key – Assigned Operation: 0–9, *,

Any of the 16 operations listed below can be assigned to the 0 through 9, ⋇, and # keys on the telephone keypad. Callers are able to access these operations by pressing the corresponding keys on their telephones.

Value Range

Trf to Mbx: Allows the caller to leave messages in a specified mailbox.
Trf to Ext: Transfers the caller to a specified extension.
Operator: Connects the caller to an operator.
Trf to Out: Transfers the caller to a specified outside telephone number. Enter the trunk access number of the PBX then the destination telephone number.
Exit: Plays the Custom Service exit prompt and disconnects the caller.
Prev Menu: Returns the caller to the previous menu (not available if there was no previous menu).
CS: Transfers the caller to the Custom Service specified here.
VM Serv: Allows the caller to access Voice Mail Service.
Call Trf Serv: Allows the caller to access Automated Attendant Service.
Subscriber Serv: Allows the caller to access the Subscriber Service. The caller needs to press the assigned key followed by the mailbox number that he or she wants to log in. If this option is enabled, it is strongly recommended that each subscriber set a password for his or her mailbox; this will prevent unauthorised callers from accidentally or intentionally accessing subscribers' mailboxes.
Dial by Name: Requests the caller to enter the first 3 or 4 letters of a first or last name of the person the caller wishes to reach, then transfers the caller to the corresponding extension.
Repeat Menu: Repeats the Custom Service menu.
Main Menu: Returns the caller to the Custom Service top menu.
Trf to Fax Extn: Allows the caller to send fax messages to an extension specified as the fax extension.
List All Names: The system will announce the names and extensions numbers of all subscribers (except those whose Class of Service ◆ **Directory Listing** parameter is set to "No").
None: No operation assigned.

Example: Assigning key [1] to transfer to extension 101

1. Click the check box next to key [1].
2. Select "Trf to Ext" in the "Assigned Operation" column.
3. Enter "101" in the "Value" column.

Example: Cancelling the setting for key [1]

1. Clear the check box next to key [1].

Feature Guide References

3.2.1.15 Custom Service

23.3.2 UM Configuration—[4-3] Service Settings—Custom Service—Date Control

The below parameters are set for the Date Control Custom Service in the Custom Service Builder.
This service allows you to assign a different operation for up to 5 time periods. The caller makes no selection and no menu is announced.

◆ Description

The information typed in this field is for reference only.

Value Range

Max. 32 characters

Feature Guide References

3.2.1.15 Custom Service

◆ Period 1–5, Outside

Period 1–5:
Specifies the name of date period for reference, start and end date, and an operation.

Outside:
Allows you to specify an operation that is enabled on all other dates not included in the set periods.

Value Range

Period 1–5:
Name: Max. 16 characters
From/To: Select the check box, and then click the input field to select a date (month and day) from the calendar. You can specify a beginning date (From), ending date (To), or both for each period.
Assigned Operation: Trf to Mbx, Trf to Ext, Operator, Trf to Out, Exit, Prev Menu, CS, VM Serv, Call Trf Serv, Subscriber Serv, Dial by Name, Repeat Menu, Main Menu, Trf to Fax Extn, List All Names, None (see **23.3.1 UM Configuration—[4-3] Service Settings—Custom Service—Menu & Transfer—◆ Key – Assigned Operation: 0–9, *, #**)

Outside:
Name: Max. 16 characters
Assigned Operation: Trf to Mbx, Trf to Ext, Operator, Trf to Out, Exit, Prev Menu, CS, VM Serv, Call Trf Serv, Subscriber Serv, Dial by Name, Repeat Menu, Main Menu, Trf to Fax Extn, List All Names, None (see **23.3.1 UM Configuration—[4-3] Service Settings—Custom Service—Menu & Transfer—◆ Key – Assigned Operation: 0–9, *, #**)

Feature Guide References

3.2.1.15 Custom Service

23.3.3 UM Configuration—[4-3] Service Settings—Custom Service—Time Control

The below parameters are set for the Time Control Custom Service in the Custom Service Builder.
This service allows you to assign a different operation for up to 5 blocks of time during the day. The caller makes no selection and no menu is announced.

◆ Description

The information typed in this field is for reference only.

Value Range

Max. 32 characters

Feature Guide References

3.2.1.15 Custom Service

◆ Period 1–5, Outside

Period 1–5:
Specifies the name of time period for reference, start and end time, and an operation.

Note

When the start time is specified and the end time is "None", the period will end at "00:00".

Outside:
Allows you to specify an operation that is enabled for all other times not included in the set time periods.

Value Range

Period 1–5:
Name: Max. 16 characters
From/To: Select the check box, click the input field, and then specify a time (hour and minute). You can specify a beginning time (From), ending time (To), or both for each period.
Assigned Operation: Trf to Mbx, Trf to Ext, Operator, Trf to Out, Exit, Prev Menu, CS, VM Serv, Call Trf Serv, Subscriber Serv, Dial by Name, Repeat Menu, Main Menu, Trf to Fax Extn, List All Names, None (see **23.3.1 UM Configuration—[4-3] Service Settings—Custom Service—Menu & Transfer—◆ Key – Assigned Operation: 0–9, *, #**)

Outside:
Name: Max. 16 characters
Assigned Operation: Trf to Mbx, Trf to Ext, Operator, Trf to Out, Exit, Prev Menu, CS, VM Serv, Call Trf Serv, Subscriber Serv, Dial by Name, Repeat Menu, Main Menu, Trf to Fax Extn, List All Names, None (see **23.3.1 UM Configuration—[4-3] Service Settings—Custom Service—Menu & Transfer—◆ Key – Assigned Operation: 0–9, *, #**)

Feature Guide References

3.2.1.15 Custom Service

23.3.4 UM Configuration—[4-3] Service Settings—Custom Service—Day Control

The below parameters are set for the Menu Transfer Custom Service in the Custom Service Builder.
This service allows you to assign a different operation for each day of the week, and for all holidays. The caller makes no selection and no menu is announced.

◆ Description

The information typed in this field is for reference only.

Value Range

Max. 32 characters

Feature Guide References

3.2.1.15 Custom Service

◆ Sunday–Saturday, Holiday

Specifies a service for each day of the week and for all holidays.

Note

If an operation is assigned to "Holiday" here, either one of the following settings is required in order to activate the operation for the "Holiday" Custom Service:

a. In the Holiday Table, select "Custom Service Menu" and specify the number of this Date Control—"Holiday" Custom Service, or the number of its higher layered Custom Service (see **23.4 UM Configuration—[4-4] Service Settings—Holiday Table**).

b. Assign the desired Date Control—"Holiday" Custom Service or its higher layered Custom Service to the desired Port/Trunk (see **22.1 UM Configuration—[3-1] UM Extension / Trunk Service—Service Group**).
For "Port Affected/Trunk Affected", exclude the Port/Trunk numbers that are assigned to the Date Control—"Holiday" Custom Service or the number of its higher layered Custom Service.

Value Range

Assigned Operation: Trf to Mbx, Trf to Ext, Operator, Trf to Out, Exit, Prev Menu, CS, VM Serv, Call Trf Serv, Subscriber Serv, Dial by Name, Repeat Menu, Main Menu, Trf to Fax Extn, List All Names, None (see **23.3.1 UM Configuration—[4-3] Service Settings—Custom Service—Menu & Transfer—◆ Key – Assigned Operation: 0–9, *, #**)

Feature Guide References

3.2.1.15 Custom Service

23.3.5 UM Configuration—[4-3] Service Settings—Custom Service—Password

The below parameters are set for the Password Custom Service in the Custom Service Builder.
This service requires that callers enter a password, followed by "#". Each password is assigned an operation. If a password is entered correctly, the caller is handled by the password's pre-programmed operation. The prompt for this service can be recorded in the CS No. dialogue box.
Custom Service prompts can be recorded only in On-line mode.

◆ Description

The information typed in this field is for reference only.

Value Range

Max. 32 characters

Feature Guide References

3.2.1.15 Custom Service

◆ Menu Repeat Cycle (1-3)

Specifies the number of times the Custom Service menu message will be repeated to the caller.

Value Range

1–3 times

Feature Guide References

3.2.1.15 Custom Service

◆ Wait for First Digit (0-10 s)

Specifies the length of time that the system waits for the caller to dial the first digit after a Custom Service menu is played for the caller. If this time expires, the No DTMF Operation setting determines how the call is then handled.

Value Range

1–10 s

Feature Guide References

3.2.1.15 Custom Service

◆ Maximum Number of Invalid Entry (1-10)

Specifies the number of times an invalid password is entered before the operation assigned for ◆ **Entry Failure** is executed.

Value Range

1–10 times

Feature Guide References

3.2.1.15 Custom Service

◆ No DTMF Input Operation

Determines how calls are handled when callers do not dial any numbers in response to system guidance (often because they are rotary telephone users). The default setting is "Operator", which allows the caller to be automatically connected to an operator after the message is played.

Value Range

Trf to Mbx, Trf to Ext, Operator, Trf to Out, Exit, Prev Menu, CS (see **23.3.1 UM Configuration—[4-3] Service Settings—Custom Service—Menu & Transfer—◆ No DTMF Input Operation**)

Feature Guide References

3.2.1.15 Custom Service

◆ Entry Failure

Determines what operation is activated when a caller enters an invalid password X times. (X= the value set for **◆ Maximum Number of Invalid Entry (1-10)**)

Value Range

Trf to Mbx, Trf to Ext, Operator, Trf to Out, Exit, Prev Menu, CS, VM Serv, Call Trf Serv, Subscriber Serv, Dial by Name, Repeat Menu, Main Menu, Trf to Fax Extn, List All Names (see **23.3.1 UM Configuration—[4-3] Service Settings—Custom Service—Menu & Transfer—◆ Key – Assigned Operation: 0–9, *, #**)

Feature Guide References

3.2.1.15 Custom Service

◆ Pass1–5, Cancel

Pass1–5:
Specifies a password and an operation for the specified password.

Cancel:
Determines the operation that is activated when a caller presses "#" to cancel password entry.

Value Range

Pass1–5:
Password: Max. 12 digits
Assigned Operation: Trf to Mbx, Trf to Ext, Operator, Trf to Out, Exit, Prev Menu, CS, VM Serv, Call Trf Serv, Subscriber Serv, Dial by Name, Repeat Menu, Main Menu, Trf to Fax Extn, List All Names, None (see **23.3.1 UM Configuration—[4-3] Service Settings—Custom Service—Menu & Transfer—◆ Key – Assigned Operation: 0–9, *, #**)

Cancel:
Assigned Operation: Trf to Mbx, Trf to Ext, Operator, Trf to Out, Exit, Prev Menu, CS, VM Serv, Call Trf Serv, Subscriber Serv, Dial by Name, Repeat Menu, Main Menu, Trf to Fax Extn, List All Names, None (see **23.3.1 UM Configuration—[4-3] Service Settings—Custom Service—Menu & Transfer—◆ Key – Assigned Operation: 0–9, *, #**)

Feature Guide References

3.2.1.15 Custom Service

23.4 UM Configuration—[4-4] Service Settings—Holiday Table

Holidays can be set for and assigned to trunks and Unified Messaging ports. When a call is received from a certain trunk or by a certain subscriber during the time frame set for an assigned holiday, the call handling settings for that holiday will be used. This screen is similar to the table found in **10.5 PBX Configuration—[2-5] System—Holiday Table**. You can also access the PBX Holiday Table directly by clicking the **PBX Holiday Table** tab. A maximum of 24 different holidays can be programmed.

◆ Setting

Enables the setting of the holiday. This setting synchronises with the PBX's Holiday Table.

Value Range

Enable, Disable

PC Programming Manual References

10.5 PBX Configuration—[2-5] System—Holiday Table—◆ Holiday Table—Setting

Feature Guide References

3.2.1.20 Holiday Service

◆ Name of Holiday

Specifies the name of the holiday setting for later reference.

Value Range

Max. 32 Characters

Feature Guide References

3.2.1.20 Holiday Service

◆ Start Date (Month Day)

Specifies the month and day of the holiday start date. Click the cell to display a calendar. Select a month using the arrow buttons, and click on a day for the selected month. This setting synchronises with the PBX's Holiday Table.

Value Range

Month and Day

PC Programming Manual References

10.5 PBX Configuration—[2-5] System—Holiday Table
→◆ Holiday Table—Start Date—Month
→◆ Holiday Table—Start Date—Day

Feature Guide References

3.2.1.20 Holiday Service

◆ Start Time

Specifies the time of day on the specified date at which to begin the holiday service. Click the cell to display an array of hours and minutes. Select an hour of the day and a minute of the hour to set the time.

Value Range

Hour and Minute

Feature Guide References

3.2.1.20 Holiday Service

◆ End Date (Month Day)

Specifies the month and day of the holiday end date. Click the cell to display a calendar. Select a month using the arrow buttons, and click on a day for the selected month. This setting synchronises with the PBX's Holiday Table.

Value Range

Month and Day

PC Programming Manual References

10.5 PBX Configuration—[2-5] System—Holiday Table
→◆ Holiday Table—End Date—Month
→◆ Holiday Table—End Date—Day

Feature Guide References

3.2.1.20 Holiday Service

◆ End Time

Specifies the time of day on the specified date at which to end the holiday service. Click the cell to display an array of hours and minutes. Select an hour of the day and a minute of the hour to set the time.

Value Range

Hour and Minute

Feature Guide References

3.2.1.20 Holiday Service

◆ Retain Holiday

If "Yes" is selected, the holiday will not end regardless of the end time setting. To end the holiday setting when "Yes" is selected and the end time has already passed, set ◆ **Setting** to "Disable" or re-programme the settings for the holiday.

Value Range

No, Yes

Feature Guide References

3.2.1.20 Holiday Service

◆ Company Greeting No.

Specify the greeting callers hear when calling the affected trunks or ports during the holiday.

Value Range

None (do not playback): No greeting is heard.
No. 1–32: The selected company greeting is heard.
System Greeting: The following greeting is heard: "Good morning/Good afternoon/Good evening. Welcome to the Unified Messaging System".

Feature Guide References

3.2.1.20 Holiday Service

◆ Service

One of 4 incoming call services (Voice Mail, Automated Attendant, Interview, or Custom Service) can be assigned to each holiday. After a greeting is played (if specified), the call will be transferred to the selected service.

Value Range

Voice Mail Service: The caller is transferred to the Voice Mail Service.
Automated Attendant Service: The caller is transferred to the Automated Attendant Service.
Interview Mailbox: The caller is transferred to an Interview Mailbox.
Custom Service Menu: The caller is transferred to a Custom Service Menu.

Feature Guide References

3.2.1.20 Holiday Service

◆ Interview Mailbox/Custom Service Menu

If "Interview Mailbox" or "Custom Service Menu" was selected for ◆ **Service**, specify the Interview Mailbox or Custom Service here.

Value Range

Interview Mailbox number, Custom Service number

Feature Guide References

3.2.1.20 Holiday Service

◆ Trunk Affected

Specify which trunks will be subject to the holiday setting. Click **Edit**, and then select the check boxes for the trunks to be subject to the holiday setting, or select the **All** check box to apply the holiday to all trunks. Click **OK** to finish.

Value Range

Trunk No. 1–64, All

Feature Guide References

3.2.1.20 Holiday Service

◆ Port Affected

Specify which UM ports will be subject to the holiday setting. Click **Edit**, and then select the check boxes for the UM ports to be subject to the holiday setting, or select the **All** check box to apply the holiday to all UM ports. Click **OK** to finish.

Value Range

Port No. 1–24, All

Feature Guide References

3.2.1.20 Holiday Service

Section 24

UM Configuration—[5] System Parameters

This section serves as reference operating instructions for the System Parameters menu of the UM Configuration menu of the Setup screen of Web Maintenance Console.

24.1 UM Configuration—[5-1] System Parameters—Mailbox Group

Also called System Group Distribution Lists. Mailbox Groups allow a caller or subscriber to record a message and have it sent to several mailboxes. Messages sent to a Mailbox Group are sent to all subscribers in the group. The system can maintain a maximum of 20 Mailbox Groups. Each group can have a maximum of 200 members. For Personal Group Distribution Lists, see **20.1.2 UM Configuration—[1-2] Mailbox Settings—Full Setting—Personal Distribution List**.
Follow the steps below to create or edit a Mailbox Group.

Adding Mailbox Groups

1. Specify the **Group List No.** and **Group Name** for each Mailbox Group to be used.
2. Click **OK**.

Editing Mailboxes

To edit a mailbox group, select the desired mailbox group, then click the icon. You can also edit specific parameters directly from the Mailbox Group list.

Deleting Mailboxes

1. Select a mailbox group.
2. Click the icon.
3. Click **Yes**.

Adding Mailboxes to a Group

1. In the **Group Members** column, click the **Edit** button of the group to add mailboxes to.
2. In the **Subscribers To Add** column, select the check boxes for the mailbox numbers to add to the group.
3. Click **Add**.
4. Click **OK**.
5. Click **OK**.

Recording a Name for the Group in the Edit Mailbox Group dialogue box

1. Select the desired Mailbox Group and click the icon.

   Note

   Before you can record, confirm that there is at least 1 member in the group and that you have clicked **Apply** since adding members to the group.
2. Select "Record from extension" or "Import from recorded file". When "Record from extension" is selected:
   1. Specify the extension number of the telephone used for recording, then click **Connect**.
   2. When the specified extension rings, go off-hook.
   3. Click **Record**, **Play**, or **Stop** to record or play a voice label through the extension.
   4. Click **Disconnect**.
   5. Click **OK**.

   When "Import from recorded file" is selected:
   1. Click the folder icon.
      The **Open** dialogue box appears.
   2. Navigate to the folder containing the WAV files you want to open.
      WAV files must meet the following specifications:
      – G.711 PCM codec
      – 8 kHz, 8-bit sampling rate
      – Monaural
      – A-law or μ-law encoding

   3. Select the desired WAV file.
   4. Click **Open** to import the file.
3. Click **OK**.

◆ Group List No.

Specifies the Mailbox Group number. This number is similar to a mailbox number and is used to send a message to all subscribers of the group. It must be a unique number; no other group or mailbox can be assigned this number.

Value Range

2–[the value set in ◆ **Mailbox No. Max. Length (3-8)**] digits

Feature Guide References

3.2.2.14 Group Distribution Lists

◆ Group Name

Specifies the group name.

Value Range

Max. 32 characters

Feature Guide References

3.2.2.14 Group Distribution Lists

24.2 UM Configuration—[5-2] System Parameters—Extension Group

An Extension Group is a group of extensions that share a common mailbox. Each group has an Extension Group number. If the group number is assigned as the owner of a mailbox, then all members cannot be assigned their own personal mailboxes.
Up to 20 Extension Groups can be created, and each group can consist of 100 extensions (members). You can add, delete, and review the extensions. Members of an Extension Group are able to share the same mailbox and be notified by the Message Waiting Notification feature when a message is received.
Follow the steps below to edit an Extension Group.

Adding Extension Groups

1. Click the icon.
2. Specify the **Group List No.** and **Group Name** for the Extension Group.
3. Click **OK**.

Editing Extension Groups

To edit Extension Group settings, select the desired Group, then click the icon. You can also edit specific parameters directly from the Extension Group list.

Deleting Extension Groups

1. Select an Extension Group.
2. Click the icon.
3. Click **Yes**.

Editing Extension Group Members

1. In the **Extension No.** column, click the **Click To Edit..** button to open the Group Members window.
2. Click the icon.
3. Enter the extension to add in **Extension**, and click **OK**.
4. Click **OK**.

The table on this screen will list any extensions that cannot be added, as well as the reason that extension cannot be added to the group (i.e. it is already in another extension group, etc.).

◆ Group List No.

Specifies the Extension Group number.

Note

In order to configure an Extension Group, set a group number here, then assign the group number as the owner of a mailbox. The Extension Group number is effectively the extension number that is the owner of the group's mailbox.

Value Range

2–8 digits

Feature Guide References

3.2.1.18 Extension Group

◆ Group Name

Specifies the group name.

Value Range

Max. 32 characters

Feature Guide References

3.2.1.18 Extension Group

24.3 UM Configuration—[5-3] System Parameters—System Caller Name Announcement

Allows the System Administrator to store a maximum of 200 telephone numbers and record a caller name for each telephone number. The caller name is announced when playing a message in their mailbox from one of the pre-programmed callers, when the system transfers a call to the subscriber from one of the pre-programmed callers (Caller ID Screening), and when the system pages the subscriber by intercom (Intercom Paging).
Caller ID Screening feature is only available when the ◆ **Caller ID Screen** parameter of the subscriber's Class of Service is set to "Yes". This feature is also enabled when subscribers select "Call screening" as the Call Transfer method (see "3.2.2 Subscriber Features—3.2.2.7 Call Transfer Status" in the Feature Guide).
The Intercom Paging feature is enabled by selecting "Intercom Paging" as the Call Transfer method (see "3.2.2 Subscriber Features—3.2.2.7 Call Transfer Status" and/or "3.2.2 Subscriber Features—3.2.2.15 Incomplete Call Handling Service" in the Feature Guide).
Follow the steps below to edit System Caller Name Announcements.

Adding a Caller Extension and Description

1. Specify the **Caller-ID No.** and **Description** for each entry that will be used.
2. Click **OK**.

Editing Caller ID Entries

To edit an entry, select the desired mailbox group, then click the icon. You can also edit specific parameters directly from the list.

Deleting Mailboxes

1. Select an entry.
2. Click the icon.
3. Click **Yes**.

Recording a Name for the extension in the Caller Information dialogue box

1. Select the desired Caller ID number and click the icon.

   Note

   Before you can record, confirm that you have clicked **Apply** since you added the Caller ID No.
2. Select "Record from extension" or "Import from recorded file".
   When "Record from extension" is selected:
   1. Specify the extension number of the telephone used for recording, then click **Connect**.
   2. When the specified extension rings, go off-hook.
   3. Click **Record**, **Play**, or **Stop** to record or play a voice label through the extension.
   4. Click **Disconnect**.
   5. Click **OK**.

   When "Import from recorded file" is selected:
   1. Click the folder icon.
      The **Open** dialogue box appears.
   2. Navigate to the folder containing the WAV files you want to open.
      WAV files must meet the following specifications:
      – G.711 PCM codec
      – 8 kHz, 8-bit sampling rate
      – Monaural
      – A-law or μ-law encoding
   3. Select the desired WAV file.

4. Click **Open** to import the file.
3. Click **OK**.

◆ Caller-ID No.

Assigns the telephone number for which the system announces the pre-recorded caller name to extension users.

Value Range

Max. 20 digits consisting of 0–9

Feature Guide References

3.2.1.10 Caller Name Announcement

◆ Description

Enters a name and/or description of the Caller ID number.

Value Range

Max. 20 characters

Feature Guide References

3.2.1.10 Caller Name Announcement

24.4 UM Configuration—[5-4] System Parameters—Parameters

Daily Hours Setting

◆ Clock Format

Specifies the time format (12-hour or 24-hour).

Note

The selected time format (12-hour or 24-hour) affects the time format of reports as well as the time that appears in e-mail notifications for new messages.

Value Range

12 H, 24 H

◆ Morning Hours Start Time (HH:MM)

Specifies the starting time of the morning greeting.

Value Range

HH:MM (HH: Hour, MM: Minute)

Feature Guide References

3.2.1.12 Company Greeting

◆ Afternoon Hours Start Time (HH:MM)

Specifies the starting time of the afternoon greeting.

Value Range

HH:MM (HH: Hour, MM: Minute)

Feature Guide References

3.2.1.12 Company Greeting

◆ Evening Hours Start Time (HH:MM)

Specifies the starting time of the evening greeting.

Value Range

HH:MM (HH: Hour, MM: Minute)

Feature Guide References

3.2.1.12 Company Greeting

Prompt Setting

These settings are required when Multilingual Service is enabled.

◆ Primary Language

Specifies the default language to be used when another language is not selected in the Multilingual Selection Menu.

Value Range

Guidance No. 1–8

Feature Guide References

3.2.1.31 Multilingual Service
3.2.1.41 System Prompts

◆ Language 1–5—Language (1–5)

Assigns a selection number (1–9) to each language. Callers use the numbers to select the desired languages for their message prompts. This setting is required when either one or both of the following parameters are set to "Selective":

a. ◆ Day, Night, Lunch, and Break Mode - Incoming Call Service Prompt
b. ◆ External Message Delivery Prompt Mode

For each selection of this setting, related items within "Language 1–5" can be set.

Value Range

Language 1–5

PC Programming Manual References

22.1 UM Configuration—[3-1] UM Extension / Trunk Service—Service Group◆ Day, Night, Lunch, and Break Mode - Prompt for No DTMF Input Callers
24.4 UM Configuration—[5-4] System Parameters—Parameters—External Message Delivery

Feature Guide References

3.2.1.31 Multilingual Service
3.2.1.41 System Prompts

◆ Language 1–5—Language

Specifies the language for the current language selection number.

Value Range

None, Guidance No. 1–8

Feature Guide References

3.2.1.31 Multilingual Service
3.2.1.41 System Prompts

◆ Language 1–5—DTMF

Specifies the number to be input to select the language set for the current language selection number.

Value Range

None, 1–9

Feature Guide References

3.2.1.31 Multilingual Service
3.2.1.41 System Prompts

◆ Selection Menu Wait Time (0-20 s)

Specifies the length of time that the system waits for the caller to select a language by pressing the appropriate dial key. If this time period expires without the selection number being entered, the system uses the Primary Language.

Value Range

0–20 s

Feature Guide References

3.2.1.41 System Prompts

◆ Selection Menu Repeat Cycle (1-3 times)

Specifies the number of times the system will play the Multilingual Selection Menu.

Value Range

1–3

Feature Guide References

3.2.1.31 Multilingual Service

◆ Delay Time After Connected Received for Incoming (0-10 s)

Specifies the length of time (in seconds) that the system waits after the line is connected for incoming calls before playing the prompt.

Value Range

0–10 s

Feature Guide References

3.2.1.41 System Prompts

◆ Delay Time After Connected Received for Outgoing (0-10 s)

Specifies the length of time (in seconds) that the system waits after the line is connected for outgoing calls before playing the prompt.

Value Range

0–10 s

Feature Guide References

3.2.1.41 System Prompts

◆ System Guidance—System Guidance

Specifies the parameters which vary depending on the language assigned as the System Guidance language. For each selection of this setting, related items within "System Guidance 1–8" can be set.

Value Range

Guidance No. 1–8

PC Programming Manual References

24.4 UM Configuration—[5-4] System Parameters—Parameters—Prompt Setting—◆ Primary Language

◆ System Guidance—Select Language—Position of "AM/PM" in Time Stamp

Specifies the position of the "AM/PM" announcement.

Value Range

Before: the system announces "AM/PM" before the time, such as P.M. 3:42.
After: the system announces "AM/PM" after the time, such as 3:42 P.M.
24-h: the system announces the time in 24-h format, such as 15:42.

◆ System Guidance—Select Language—"O’clock" Prompt

Specifies when and if "O’clock" is announced.

Value Range

When at :00: the system announces "O’clock" only on the hour, such "one o’clock".
Always: the system announces "O’clock" always.
None: No announcement

◆ System Guidance—Select Language—Month/Day Prompt

Specifies the order of the month and day for date announcements.

Value Range

MM:DD: Month and Day
DD:MM: Day and Month

◆ System Guidance—Select Language—# Announcement Mode

Specifies the way of announcement for the "#" character when "US-English" or "English (UK)" is selected as System Guidance.

Value Range

POUND, HASH

PBX Parameters

Specifies how the system will initiate and control call transfers, setup outgoing calls, and control message waiting lamps on extensions.

◆ PBX Environment—Operator Transfer Sequence (Up to 16 digits / [0-9 * # D R F T X , ;])

Specifies the sequence for transferring calls to an operator's extension.

Value Range

Max. 16 digits consisting of 0–9, ⋇, # and special codes
D: Disconnecting
F: Flash (Recall)
R: Ringback Tone Detection
T: Dial Tone Detection
, : Dial Pause (default 1 s)
; : Dial Pause (default 3 s)
X: Extension Dialling
0–9, ⋇, #: Dial Code

◆ PBX Environment—Extension Transfer Sequence (Up to 16 digits / [0-9 * # D R F T X , ;])

Specifies the sequence for transferring calls to any extension except an operator's extension.

Value Range

Max. 16 digits consisting of 0–9, ⋇, # and special codes
D: Disconnecting
F: Flash (Recall)
R: Ringback Tone Detection
T: Dial Tone Detection
, : Dial Pause (default 1 s)
; : Dial Pause (default 3 s)
X: Extension Dialling
0–9, ⋇, #: Dial Code

◆ PBX Environment—Alternate Extension Transfer Sequence (Up to 16 digits / [0-9 * # D R F T X , ;])

Specifies the sequence for transferring calls to extensions in the Alternate Extension Group.

Value Range

Max. 16 digits consisting of 0–9, ⋇, # and special codes
D: Disconnecting
F: Flash (Recall)
R: Ringback Tone Detection
T: Dial Tone Detection

, : Dial Pause (default 1 s)
; : Dial Pause (default 3 s)
X: Extension Dialling
0–9, ⅊, #: Dial Code

Feature Guide References

3.2.1.1 Alternate Extension Group

Dialling Parameters/MSW Notification

◆ Dialling Parameters—Call Transfer No Answer Time (10-60 s)

Specifies the length of time that the system waits before retrieving the transferred call when there is no answer at the destination extension.

Note

Make sure that the duration of Call Transfer No Answer Time is longer than the duration of Call Forwarding No Answer Time at the PBX. Otherwise, the PBX may forward the call immediately to the extension's Intercept Routing destination according to PBX programming, rather than return the call to the system.

Value Range

10–60 s

PC Programming Manual References

12.1 PBX Configuration—[4-1] Extension—Wired Extension—◆ FWD No Answer Time
12.2 PBX Configuration—[4-2] Extension—Portable Station—◆ FWD No Answer Time

◆ Dialling Parameters—Outgoing Call No Answer Time (10-90 s)

Specifies the length of time that the system waits before concluding that there is no answer at the outside number called.

Value Range

10–90 s

◆ Dialling Parameters—Pause Time for "," (100-9900 ms, *100 ms)

Specifies the pause time for "," used in call sequences.

Value Range

100–9900 ms, in units of 100 ms

◆ Dialling Parameters—Pause Time for ";" (100-9900 ms, *100 ms)

Specifies the pause time for ";" used in call sequences.

Value Range

100–9900 ms, in units of 100 ms

◆ Message Waiting Notification—System Callback No. (Up to 32 digits)

Specifies a callback number to be displayed with text reports of messages waiting notifications. The system callback number is displayed when the caller does not enter his or her telephone number when prompted by the system.

Value Range

Max. 32 digits

Feature Guide References

3.2.1.30 Message Waiting Notification—Telephone Device

External Message Delivery

Determines how essential External Message Delivery features are carried out.

◆ Retry Times (times)

Specifies the number of times the system will attempt to deliver an external message when the destination is busy or does not answer.

Value Range

0–3 times (E/NE: 0–4 times, NZ: 0–5 times, C: 0–9 times, Taiwan/Malaysia: 0–2 times)

Feature Guide References

3.2.2.12 External Message Delivery Service

◆ Busy Delay (min)

Specifies the length of time (in minutes) the system waits to try to deliver an external message again when the destination is busy.

Value Range

1–60 min (Malaysia: 2–120 min)

Feature Guide References

3.2.2.12 External Message Delivery Service

◆ No Answer Delay (min)

Specifies the length of time (in minutes) the system waits to try to deliver an external message again when the destination is not answering.

Value Range

60–120 min

Feature Guide References

3.2.2.12 External Message Delivery Service

◆ Outgoing Call UM Extensions

Specifies the Unified Messaging extensions for the External Message Delivery feature.

Value Range

UM port extension number

PC Programming Manual References

9.6 PBX Configuration—[1-1] Configuration—Slot—UM Port Property

Feature Guide References

3.2.2.12 External Message Delivery Service

◆ Message Length (1-6 min)

Specifies the maximum length (in minutes) of messages recorded for the External Delivery Message.

Value Range

1–6 min

Feature Guide References

3.2.2.12 External Message Delivery Service

◆ Max. Messages for Mailboxes (1-100 msgs)

Specifies the maximum number of External Delivery Messages that can be stored in one mailbox.

Value Range

1–100

Feature Guide References

3.2.2.12 External Message Delivery Service

◆ System External Message Delivery Duration Time (1-9 min)

Specifies the maximum length of External Message Delivery calls. The timer begins counting when the called party answers the call, and if the called party has not pressed the appropriate dial key to initiate message playback, the system terminates the call when this timer expires.

Value Range

1–9 min

Feature Guide References

3.2.2.12 External Message Delivery Service

◆ Company Telephone No. (Up to 32 digits)

Specifies the company's telephone number. When the recipient has failed to retrieve the sender's message because of he or she did not enter the correct password, the system announces the company's telephone number to the caller. The caller can later call the company for assistance or to speak to the message sender.

Value Range

Max. 32 digits

Intercom Paging Parameters

Unified Messaging Intercom Paging functions in conjunction with the Intercom Paging feature of the PBX. It allows the system to page the called party (announce the caller's name, line number, etc.) while the caller is placed on hold. To utilise this feature, Intercom Paging must be available for the PBX, and the Unified Messaging system must be properly programmed.

◆ No Answer Time for Intercom Paging (1-30 s)

Specifies the length of time (in seconds) the system waits before concluding Intercom Paging when there is no answer. The system will return to the caller if the paged party does not respond before this timer expires.

Value Range

1–30 s

Feature Guide References

3.2.1.23 Intercom Paging

◆ Announcement Repeat Cycle (1-3 times)

Specifies the number of times the system announces the page.

Example:
"I have a call for (name)".

Value Range

1–3 times

Feature Guide References

3.2.1.23 Intercom Paging

◆ Intercom Paging Retry (1-10 times)

Specifies the number of times to retry paging when the called subscriber has set ◆ **Incomplete Call Handling for No Answer**/◆ **Incomplete Call Handling for Busy** to "Page the mailbox owner by intercom paging" and the subscriber is busy or if there is no answer.

Value Range

1–10 times

PC Programming Manual References

20.1.2 UM Configuration—[1-2] Mailbox Settings—Full Setting—◆ Incomplete Call Handling for No Answer
20.1.2 UM Configuration—[1-2] Mailbox Settings—Full Setting—◆ Incomplete Call Handling for Busy

Feature Guide References

3.2.1.23 Intercom Paging

◆ Caller Recorded Name Announce Mode

Determines whether or not the system announces the caller's name during paging. (In order for the name to be announced, it must be recorded beforehand.)

Value Range

Disable, Enable

Feature Guide References

3.2.1.23 Intercom Paging

Fax Management

You can programme the system to automatically detect incoming fax calls and forward those calls to a fax extension. You can specify a maximum of 2 fax extensions as the destination for faxes; if the main fax extension is not available to receive a fax, the system will forward the fax call to the alternate fax extension.

◆ Automatic Transfer of Incoming Fax Call

Specifies the detection and destination of incoming fax calls.

Note

The system can detect incoming fax signals during the first 30 seconds after it answers incoming calls.

Value Range

Disable, Transfer to Fax Extension

◆ Main Fax Extension No. (1-8 digits)

Specifies the extension number of the main fax machine.

Value Range

1–8 digits

◆ Alternate Fax Extension No. (1-8 digits)

Specifies the extension number of the alternate fax machine. When the main fax extension is busy or does not answer within the time specified under ◆ **Fax No Answer Time (5-60s)** , the system forwards the fax call to the alternate fax extension.

Value Range

1–8 digits

◆ Fax No Answer Time (5-60s)

Specifies the length of time (in seconds) that the system waits for the main or alternate fax extension to answer a fax call before taking other action, such as notifying the Fax Manager that the fax could not be received.

Value Range

5–60 s

◆ Fax Manager Mailbox No.

Specifies the mailbox number of the Fax Manager. The system will notify the Fax Manager of the status of fax calls depending upon the settings of the ◆ **Fax No Answer Coverage Mode** and ◆ **Fax Notification Mode** parameters.

Value Range

2–[the value set in ◆ **Mailbox No. Max. Length (3-8)**] digits

◆ Fax No Answer Coverage Mode

Determines what action the system takes when an incoming fax call could not be answered by the main or alternate fax extension. The system can announce to the Fax Manager the number of unanswered fax calls. The number announced is the number of unanswered fax calls since the last time the system notified the Fax Manager. This announcement is heard when the Fax Manager logs in to his or her mailbox.

Value Range

No: The system will not notify the Fax Manager when fax calls were not answered.
Mbx: The system will announce the number of unanswered fax calls to the Fax Manager when the Fax Manager logs in to his or her mailbox.
Ext: The system will announce the number of unanswered fax calls to the Fax Manager by calling the Fax Manager's extension.

◆ Fax Notification Mode

Determines what action the system takes when an incoming fax call is successfully received by the main or alternate fax extension. The system can announce to the Fax Manager the number of received fax calls. The number announced is the number of received fax calls since the last time the system notified the Fax Manager.

Value Range

No: The system will not notify the Fax Manager when fax calls are answered.
Mbx: The system will announce the number of successfully received fax calls to the Fax Manager when the Fax Manager logs in to his or her mailbox.
Ext: The system will announce the number of successfully received fax calls to the Fax Manager by calling the Fax Manager's extension.

Disconnect Parameters

◆ Maximum Silence Time (0-60 s)

Specifies the length of silence detected by the system before the system disconnects the call.

Value Range

0–60 s

◆ Maximum Continuous Tone Time (0-60 s)

Specifies the length of time the system waits when a continuous tone is detected before it disconnects the call.

Value Range

0–60 s

◆ Maximum Cyclic Tone Time (0-60 s)

Specifies the length of time the system waits when a cyclic tone is detected before it disconnects the call.

Value Range

0–60 s

◆ Maximum Call Duration (0-60 min)

Specifies the maximum duration of calls. If the system detects no DTMF signals for the specified amount of time, it terminates the call. Calls will not be terminated while playing or recording messages. If this setting is set to "0", calls will not be terminated.

Value Range

0–60 min

Transfer to Outside

These parameters determine how the system will transfer calls to a trunk via the following features: Call Transfer Service, Custom Service, Personal Custom Service, Caller ID Callback, Call-through Service.

◆ Outside Transfer Sequence—Call Transfer to Outside Sequence (Up to 16 digits / [0-9 * # D F R T , ; N])

Specifies the sequence the system uses to transfer calls to trunks.

Value Range

Max. 16 digits consisting of 0–9, ⋇, # and special codes
D: Disconnecting
F: Flash (Recall)
R: Ringback Tone Detection
T: Dial Tone Detection
, : Dial Pause for 1 s (default)
; : Dial Pause for 3 s (default)
N: Telephone Number Dialling
0–9, ⋇, #: Dial Code

Feature Guide References

3.2.1.7 Call Transfer to Outside

◆ Outside Transfer Sequence—EFA Transfer Sequence (Up to 16 digits / [0-9 * # D F R T , ; N A])

Specifies the sequence the system uses to transfer calls to trunks using EFA (External Feature Access). This setting should match the settings of the PBX.

Value Range

Max. 16 digits consisting of 0–9, ⋇, # and special codes
D: Disconnecting
F: Flash (Recall)
R: Ringback Tone Detection
T: Dial Tone Detection
, : Dial Pause for 1 s (default)
; : Dial Pause for 3 s (default)
N: Telephone Number Dialling
A: Feature Access Code
0–9, ⋇, #: Dial Code

◆ Outside Transfer Sequence—EFA Transfer Reconnect Sequence on Busy (Up to 16 digits / [0-9 * # D F R T , ; N A])

Specifies the sequence the system uses to reconnect the line when the party transferred with EFA (External Feature Access) is busy. This setting should match the settings of the PBX.

Value Range

Max. 16 digits consisting of 0–9, ⋇, # and special codes
D: Disconnecting
F: Flash (Recall)
R: Ringback Tone Detection
T: Dial Tone Detection
, : Dial Pause for 1 s (default)
; : Dial Pause for 3 s (default)
N: Telephone Number Dialling
A: Feature Access Code
0–9, ⋇, #: Dial Code

◆ Outside Transfer Sequence—EFA Transfer Reconnect Sequence on No Answer (Up to 16 digits / [0-9 * # D F R T , ; N A])

Specifies the sequence the system uses to reconnect the line when the party transferred with EFA (External Feature Access) does not answer. This setting should match the settings of the PBX.

Value Range

Max. 16 digits consisting of 0–9, ⋇, # and special codes
D: Disconnecting
F: Flash (Recall)
R: Ringback Tone Detection
T: Dial Tone Detection
, : Dial Pause for 1 s (default)
; : Dial Pause for 3 s (default)
N: Telephone Number Dialling
A: Feature Access Code
0–9, ⋇, #: Dial Code

◆ Outside Transfer Sequence—Call Transfer to Outside Answer Mode

Specifies the answering method the system uses to detect whether the destination party has answered the transferred trunk call.

Value Range

Guidance: The system plays the following guidance before connecting the line to the destination party: "You have a call. To answer the call, press [1]. Otherwise, press [2] and hang up." If the destination party presses "1", he or she will be able to answer the transferred trunk call. The system continues playing this guidance for the time specified in ◆ **Dialling Parameters—Outgoing Call No Answer Time (10-90 s)** in **Dialling Parameters/MSW Notification**. If the transferred party does not answer the call within this time, the system considers it as a No Answer call.
Analyze: The system monitors the status of the trunk, recognises that the destination party goes off-hook, and connects the line.

Feature Guide References

3.2.1.7 Call Transfer to Outside

◆ Trunk Group (1–64)—Trunk Group No.

Specifies a trunk group for making settings for EFA Transfer, Caller ID Callback, and Outside Line Access Sequence for Caller ID Callback. Selecting different trunk groups from this drop-down list allows settings to be made for each trunk group.

Value Range

1–64

◆ Trunk Group (1–64)—EFA Transfer

Specifies whether or not the system uses EFA (External Feature Access) when transferring incoming trunk calls to another trunk. If set to "Enable", the system transfers incoming trunk calls to another trunk according to "EFA Transfer Sequence" specified in "Transfer to Outside". If set to "Disable", the system transfers incoming trunks calls to another trunk according to ◆ **Outside Transfer Sequence—Call Transfer to Outside Sequence (Up to 16 digits / [0-9 * # D F R T , ; N])** specified in **Transfer to Outside**.

Value Range

Enable, Disable

◆ Trunk Group (1–64)—Caller ID Callback

Specifies whether or not the system allows a subscriber to call back the party who left a message in his or her mailbox by using the caller ID information sent from the PBX. This setting applies to the trunk number used when the message with Caller ID information was left in his or her mailbox.

Value Range

Enable, Disable

◆ Trunk Group (1–64)—Outside Line Access Sequence for Caller ID Callback (Up to 16 digits / [0-9 * # D F R T , ;])

Specifies the sequence of trunk access numbers for Caller ID Callback. This parameter is available when the system executes Caller ID Callback without using EFA.

Value Range

Max. 16 digits consisting of 0–9, ⅊, # and special codes
D: Disconnecting
F: Flash (Recall)
R: Ringback Tone Detection
T: Dial Tone Detection
, : Dial Pause for 1 s (default)
; : Dial Pause for 3 s (default)
0–9, ⅊, #: Dial Code

◆ Number of Digits in Telephone Number (1-20)

Specifies the number of digits for local area telephone numbers. According to this parameter, telephone numbers dialled by the system can be distinguished as either local calls or long distance calls.

Value Range

1–20

E-mail Option

E-mail Integration allows the system to send new message notification or to send recorded voice messages as file attachments to subscribers via e-mail. The following settings must be made in order for the system to use E-mail Integration features.

◆ Mail Address (Up to 128 ASCII characters)

Specifies the mail address of the Unified Messaging system.

Value Range

Max. 128 characters

Feature Guide References

3.2.1.28 Message Waiting Notification—E-mail Device

◆ Full Name (Up to 64 ASCII characters)

Specifies the full name that will appear in e-mail messages sent by the Unified Messaging system.

Value Range

Max. 64 characters

Feature Guide References

3.2.1.28 Message Waiting Notification—E-mail Device

◆ Maximum Message Length (Selection)

Specifies whether voice messages sent as e-mail attachments will have a limit to their length.

Value Range

Unlimited, Other

Feature Guide References

3.2.1.28 Message Waiting Notification—E-mail Device

◆ Maximum Message Length (Other) (1-30 min)

Specifies the maximum length of voice messages sent as e-mail attachments.

Note

If you attach a voice message that is longer than this setting, surplus parts of the message may be discarded when sending the e-mail.

Value Range

1–30 min

Feature Guide References

3.2.1.28 Message Waiting Notification—E-mail Device

Message Client

◆ Password Lockup Time (5-60 min)

Specifies the amount of time access will be locked after a password has been incorrectly entered 3 consecutive times.

Value Range

5–60 min

Mailbox

◆ Mailbox No. Max. Length (3-8)

Specifies the maximum allowed number of digits for a mailbox number.

Note

This setting cannot be changed to a smaller value if mailboxes exist with a number of digits greater than that smaller value. Those mailboxes must be re-numbered or deleted before this setting can be changed to a smaller value.

Value Range

3–8 digits

Section 25

UM Configuration—[6] H/W Settings

This section serves as reference operating instructions for the H/W Settings menu of the UM Configuration menu of the Setup screen of Web Maintenance Console.

25.1 UM Configuration—[6] H/W Settings

Global Parameters

Global parameters define the settings that affect integration with other PBX operations.

◆ Maximum Time to Wait for Dial Tone (500-20000 ms, *100 ms)

Specifies the length of time that the system waits for dial tone detection.

Value Range

5–200 (× 100 ms)

◆ Delay After Dialling Before Onhook (0-250 s)

Specifies the length of time that the system waits for an answer when making an outside call. If no answer is detected, the system disconnects the call.

Value Range

0–250 s

◆ DTMF Cut Length (0-500 ms)

Specifies the length of time for DTMF to be deleted when it is detected while recording.

Value Range

0–500 ms

◆ Minimum Message Length (0-9 s)

Specifies the minimum message recording length. Messages shorter than the specified minimum recording length are discarded from the mailbox.

Value Range

0–9 s

Section 26

UM Configuration—[7] System Security

This section serves as reference operating instructions for the System Security menu of the UM Configuration menu of the Setup screen of Web Maintenance Console.

26.1 UM Configuration—[7] System Security

Manager

◆ Login Failures before Disconnection (1-99 times)

Specifies the number of times an invalid password can be entered, when the System Manager or Message Manager tries to log in to the system using a telephone, before the call is disconnected.

Value Range

1–99 times

◆ System Manager Access from Telephone

Enables or disables access to the Unified Messaging system from the System Manager's telephone.

Value Range

Disable, Enable

◆ Password for System Manager (Up to 16 numeric digits)

If "Enable" is selected in ◆ **System Manager Access from Telephone**, assign a numerical password here for the System Manager to login to the system.

Value Range

Max. 16 digits

Feature Guide References

3.1.2.7 System Security

◆ Password for System Manager (Message Client)

Specifies the password for the System Manager for accessing the Unified Messaging system from the messaging client.

Note

This setting requires the installation of an Activation Key for Unified Messaging E-mail Notification (KX-NSU2xx) for the number of users that will be accessing their UM mailbox using a client software programme.

Value Range

4–16 characters (A–Z, a–z, 1–9)

Feature Guide References

3.1.2.7 System Security

◆ Message Manager Access from Telephone

Enables or disables access to the system from the Message Manager's telephone.

Value Range

Disable, Enable

Feature Guide References

3.1.2.7 System Security

◆ Password for Message Manager (Up to 16 numeric digits)

If "Enable" is selected in ◆ **Message Manager Access from Telephone**, assign a numerical password here for the Message Manager to login to the system.

Value Range

Max. 16 digits

Feature Guide References

3.1.2.7 System Security

◆ Password for Message Manager (Message Client)

Specifies the password for the Message Manager for accessing the Unified Messaging system from the messaging client.

Note

This setting requires the installation of an Activation Key for Unified Messaging E-mail Notification (KX-NSU2xx) for the number of users that will be accessing their UM mailbox using a client software programme.

Value Range

4–16 characters (A–Z, a–z, 1–9)

Feature Guide References

3.1.2.7 System Security

Subscriber

◆ Minimum Password Length (0-16 digits)

Specifies the minimum length (number of digits) of mailbox passwords.

Value Range

0–16

◆ Enable Login Failure Disconnection

Specifies whether the system disconnects a call when the subscriber enters an invalid password n times. (n=the value specified under ◆ **Login Failures before Disconnection (1-99 times)**)

Value Range

Disable, Enable

◆ Login Failures before Disconnection (1-99 times)

Specifies the number of times an invalid password can be entered before the system disconnects the call. In order to use this feature, ◆ **Enable Login Failure Disconnection** must be set to "Enable".

Value Range

1–99 times

◆ Default Password for New Mailboxes

Specifies whether the default password is assigned to new mailboxes automatically when they are created.

Value Range

Disable, Enable

Feature Guide References

3.1.2.7 System Security

◆ Default Password—Fix digit (which length is minimum password length)

Select this option to specify a fixed password for all new mailboxes. The number of digits in the password must be equal or greater than the value specified in ◆ **Minimum Password Length (0-16 digits)**.

Value Range

Max. 16 digits

◆ Default Password—Prefix (1 or 2 digits) + Mailbox No

Select this option to specify default mailbox passwords using a prefix pattern. The value entered here will be combined with the mailbox number to become the default password. For example, if "55" is entered here, and then mailbox 101 is created, its default password will be "55101". 1 digit or 2 digits can be used as the prefix.

Value Range

1 digit: 0–9
2 digits: 00–99

Section 27

Network Service

This section serves as reference operating instructions for the Network Service menu of the Setup screen of Web Maintenance Console.

27.1 Network Service—[1] IP Address/Ports

Basic Settings

◆ LAN Setting—DHCP Port Number

Specifies the port number of the DHCP client. This parameter is only available for entering values when **Obtain an IP address automatically** is selected.

Value Range

68, 1024–65535

◆ LAN Setting—Obtain an IP address automatically/Use the following IP address

Specifies whether to enable the DHCP server to assign IP address information automatically to the mother board, or to enter the information manually.

Value Range

Obtain an IP address automatically, Use the following IP address

Feature Guide References

5.6.6 Dynamic Host Configuration Protocol (DHCP) Assignment

◆ LAN Setting—IP Address

Specifies the IP address of the mother board. This parameter is only available for entering values when **Use the following IP address** is selected.

Value Range

1.0.0.1–223.255.255.254

◆ LAN Setting—MAC Address

Indicates the MAC address of the mother board (reference only).

Value Range

00:00:00:00:00:00–FF:FF:FF:FF:FF:FF

◆ LAN Setting—Subnet Mask

Specifies the network mask address of the mother board. This parameter is only available for entering values when **Use the following IP address** is selected.

Value Range

0–255.0–255.0–255.0–255 (except 0.0.0.0 and 255.255.255.255)

◆ LAN Setting—Default Gateway

Specifies the IP address of the default gateway for the network. This parameter is only available for entering values when **Use the following IP address** is selected.

Value Range

1.0.0.1–223.255.255.254

◆ DNS Setting—Port Number

Specifies the port number of the DNS server. This parameter is only available for entering values when **Obtain DNS server address automatically** is selected.

Value Range

53, 1024–65535

◆ DNS Setting—Obtain DNS server address automatically/Use the following DNS server address

Specifies whether to enable the DHCP server to assign DNS server address information automatically to the mother board, or to enter the information manually.

Value Range

Obtain DNS server address automatically, Use the following DNS server address

Feature Guide References

5.6.6 Dynamic Host Configuration Protocol (DHCP) Assignment

◆ DNS Setting—Preferred DNS IP Address

Specifies the preferred IP address for the DNS server. This parameter is only available for entering values when **Use the following DNS server address** is selected.

Value Range

1.0.0.0–223.255.255.255

◆ DNS Setting—Alternative DNS IP Address

Specifies the alternative IP address for the DNS server. This parameter is only available for entering values when **Use the following DNS server address** is selected.

Value Range

1.0.0.0–223.255.255.255

◆ DSP IP Setting—Obtain DSP IP address automatically/Use the following DSP IP address

Specifies whether the DHCP server assigns IP address information automatically to the DSP card(s), or to enter the information manually.

Value Range

Obtain DSP IP address automatically, Use the following DSP IP address

◆ DSP IP Setting—DSP Card-1/DSP Card-2—IP Address

Specifies the IP address of the DSP card. This parameter is only available for entering values when **Use the following DSP IP address** is selected.

Value Range

1.0.0.1–223.255.255.254

◆ DSP IP Setting—DSP Card-1/DSP Card-2—MAC Address

Indicates the MAC address of the DSP card (reference only).

Value Range

00:00:00:00:00:00–FF:FF:FF:FF:FF:FF

Advanced Settings

◆ LAN Port—Speed & Duplex

Specifies the connection mode of the main port. The connection is made in 100Mbps/half duplex when Auto negotiation fails.

Value Range

Auto: Automatic mode selection
100M-Full: 100 Mbps/full duplex
100M-Half: 100 Mbps/half duplex
10M-Full: 10 Mbps/full duplex
10M-Half: 10 Mbps/half duplex

◆ LAN Port—MDI/MDIX

Specifies the cable type connected to the LAN port.

Value Range

Auto, MDI, MDIX

◆ Port Mirroring—Packet kind for mirroring

Specifies the types of packets used for port mirroring. This setting is available at Installer level only.

Value Range

Disable
LAN (All packets)
LAN (Data packets PBX)
LAN (Voice packets)

Reference

The items displayed in this tab are the settings obtained from a DHCP server by the DHCP client of the PBX. They are for reference only.

◆ Assigned IP Address—IP Address

Indicates the assigned IP address of the mother board (reference only).

◆ Assigned IP Address—MAC Address

Indicates the MAC address of the mother board (reference only).

◆ Assigned IP Address—Subnet Mask

Indicates the network mask address of the mother board (reference only).

◆ Assigned IP Address—Default Gateway

Indicates the assigned IP address of the default gateway for the network (reference only).

◆ DSP Card-1/DSP Card-2—IP Address

Indicates the IP address assigned for an installed optional DSP card (reference only).

◆ DSP Card-1/DSP Card-2—MAC Address

Indicates the MAC address of the DSP card (reference only).

◆ DSP Card-1/DSP Card-2—Subnet Mask

Indicates the Subnet Mask address of the DSP card (reference only).

◆ DSP Card-1/DSP Card-2—Default Gateway

Indicates the Default Gateway address of the DSP card (reference only).

27.2 Network Service—[2] Server Feature

27.2.1 Network Service—[2-1] Server Feature—DHCP

Settings for the DHCP Server can be programmed.

DHCP Server

◆ DHCP Server

Specifies if the DHCP server functions of the PBX are enabled or not.

Value Range
Disable, Enable

◆ Port number

Specifies the port number used for the DHCP server.

Value Range
67, 1024–65535

IP address auto assignment

◆ Starting IP address

Specifies the starting IP address for the assignable range of IP addresses.

Value Range
1.0.0.0–223.255.255.255

◆ Ending IP address

Specifies the ending IP address for the assignable range of IP addresses.

Value Range
1.0.0.0–223.255.255.255

◆ Lease interval (h)

Specifies the duration in hours of the DHCP allocation lease. Setting "0" specifies an unlimited lease duration.

Value Range
1–168 (hours)

◆ Auto assignment exclusions

Up to 16 IP Addresses can be specified that will not be automatically assigned.

Value Range
1.0.0.0–223.255.255.255

IP Address Static Assignment

◆ MAC Address

Specifies the MAC addresses of the MAC address/IP address pairs to be subject to static DHCP allocation.

Value Range

00:00:00:00:00:00–FF:FF:FF:FF:FF:FF

◆ IP Address

Specifies the IP addresses of the MAC address/IP address pairs to be subject to static DHCP allocation.

Value Range

1.0.0.0–223.255.255.255

IP Address Assignment List

◆ MAC Address

Specifies MAC addresses currently specified by the system.

Value Range

00:00:00:00:00:00–FF:FF:FF:FF:FF:FF

◆ IP Address

Specifies IP addresses currently assigned by the system.

Value Range

1.0.0.0–223.255.255.255

◆ Remaining lease time

Specifies the remaining lease time for the MAC address/IP address pair.

Value Range

1–85777 s

27.2.2 Network Service—[2-2] Server Feature—FTP

Settings for FTP server connections can be programmed.

◆ FTP Server

Enables or disables the PBX's FTP server function.

Value Range

Enable, Disable

◆ Connection Control—Control Port number

Specifies the port number for connecting to the PBX's FTP server.

Value Range

21, 1024–65535

◆ Data Transfer Port—Port number (Minimum)

Specifies the minimum port number for FTP data transfer.

Value Range

1024–65535

◆ Data Transfer Port—Port number (Maximum)

Specifies the maximum port number for FTP data transfer.

Value Range

1024–65535

◆ User Information—User Name

Specifies the user name for the PBX's FTP server authentication.

Note

Be sure to change the user name from its initial, default value. Also, for security reasons, change the user name regularly.

Value Range

Max. 24 characters (a–z, 0–9, [hyphen], [underscore])

Note

The first character must be a letter (a–z).

◆ User Information—Password

Specifies the password for the PBX's FTP server authentication.

Note

Be sure to change the password from its initial, default value. Also, for security reasons, change the password regularly.

Value Range

Max. 24 characters (A–Z, a–z, 0–9, [hyphen], [underscore])

Note

The first character must be a letter or number.

27.2.3 Network Service—[2-4] Server Feature—HTTP

HTTP server settings can be programmed.

◆ HTTP (LAN)—Port number

Specifies the port number for HTTP connections using the LAN ports. This port is used for accessing the PBX for Web Maintenance Console programming.

Value Range

80, 1024–65535

◆ Automatic logout Timer (min)

Specifies the amount of time required to elapse before logging off an inactive connection from the HTTP server.

Value Range

5, 10, 30, 60×n (n=1–24) (minutes)

27.2.4 Network Service—[2-5] Server Feature—NTP

NTP server settings for use with KX-UT series SIP phones can be programmed.

◆ NTP server

Enables or disables NTP service with the PBX's NTP server for connected KX-UT series SIP phones. When this feature is enabled, the PBX will report to connected KX-UT series SIP phones the information obtained from the SNTP server specified in **10.1.2 PBX Configuration—[2-1-2] System—Date & Time—SNTP / Daylight Saving**.
If this feature is disabled, connected KX-UT series SIP phones will use their individually programmed time settings.

Value Range

Disable, Enable

PC Programming Manual References

10.1.2 PBX Configuration—[2-1-2] System—Date & Time—SNTP / Daylight Saving—◆ SNTP—SNTP Server—IP Address
10.1.2 PBX Configuration—[2-1-2] System—Date & Time—SNTP / Daylight Saving—◆ SNTP—SNTP Server—Port Number
10.1.2 PBX Configuration—[2-1-2] System—Date & Time—SNTP / Daylight Saving—◆ SNTP—Time Zone—Time Zone

27.2.5 Network Service—[2-6] Server Feature—SMTP

Settings for SMTP for sending e-mail for PBX functions can be programmed.

◆ Mail sending—Mail sender information name

Specifies the name to be used as the sender of the e-mails from the PBX.

Value Range

Max. 64 characters

◆ Mail sending—Mail address

Specifies the sending e-mail address for messages sent from the PBX. This address, for example, could be set as the e-mail address of an administrator.

Value Range

Max. 128 characters

◆ SMTP server for relay—SMTP server address

Specifies the IP address or host name of the SMTP server to be used to send e-mails.

Value Range

1.0.0.0–223.255.255.255 (IP address), Max. 128 characters (host name)

◆ SMTP server for relay—SMTP server Port number

Specifies the port number of the SMTP server to be used to send e-mails.

Value Range

25, 1024–65535

◆ SMTP Authentication—SMTP Authentication

Specifies whether authentication on the SMTP server is enabled.

Value Range

Enable, Disable

◆ SMTP Authentication—User Name

Specifies the user name required to access the SMTP server.

Value Range

Max. 64 characters

◆ SMTP Authentication—Password

Specifies the password required to access the SMTP server.

Value Range
Max. 64 characters

◆ POP Before SMTP—POP before SMTP

Specifies whether POP before SMTP is enabled on the SMTP server.

Value Range
Enable, Disable

◆ POP Before SMTP—POP server address

Specifies the IP address or host name of the POP server when POP before SMTP is enabled.

Value Range
1.0.0.0–223.255.255.255 (IP address), Max. 128 characters (host name)

◆ POP Before SMTP—POP server Port number

Specifies the port number of the POP server when POP before SMTP is enabled.

Value Range
110, 1024–65535

◆ POP Before SMTP—User Name

Specifies the user name for the POP server when POP before SMTP is enabled.

Value Range
Max. 64 characters

◆ POP Before SMTP—Password

Specifies the password for the POP server when POP before SMTP is enabled.

Value Range
Max. 64 characters

◆ Mail Receiving—SMTP Authentication

Specifies if SMTP authentication is enabled for mail receiving.

Value Range
Enable, Disable

◆ Mail Receiving—Receive Port number (SMTP)

Specifies the receiving port number when using SMTP.

Value Range
25, 465, 587, 1024–65535

27.2.6 Network Service—[2-7] Server Feature—IMAP4

Settings for IMAP4 server functions for the PBX can be programmed.

◆ IMAP4—IMAP4 server

Specifies whether to enable the IMAP4 server functions of the PBX.

Value Range

Enable, Disable

◆ IMAP4—Port number

Specifies a port number for the IMAP server. The default value is 143.

Value Range

143, 1024–65535

◆ CAPABILITY command—Supporting IDLE response

Specifies whether the IMAP4 server will respond to IDLE commands sent by clients.

Value Range

Enable, Disable

◆ Authenticated Connection Timeout—Authenticated Connection Timeout (min)

Specifies the amount of time of no activity that is required before an authenticated connection to the IMAP4 server will be disconnected.

Value Range

1, 2, 3, 5, 10, 15, 20, 25, 30, 60 (min)

27.3 Network Service—[3] Client Feature

27.3.1 Network Service—[3-1] Client Feature—FTP

FTP client connection settings can be programmed. Up to 5 FTP sites can be specified for connections.

Connection 1—Connection 5

◆ Connection Name

Specifies the name of the connection to use for programming in other items.

Value Range

Max. 64 characters

◆ IP Address

Specifies the IP address of the FTP site. Click the **IP Address** radio button when this is used.

Value Range

1.0.0.0–223.255.255.255

◆ Name

Specifies the name of the FTP site. Click the **Name** radio button when this is used.

Value Range

FTP site name (max. 253 characters)

◆ Server Port Number

Specifies the port number used to connect to the FTP site.

Value Range

21, 990, 1024–65535

◆ User name

Specifies the user name required to log in to the FTP site.

Value Range

Max. 24 characters (a–z, 0–9, $, [hyphen], [underscore])

Note

- The first character must be a letter or number.
- $ may only be used as the final character.

◆ Password

Specifies the password for the user name required to log in to the FTP site.

Value Range

Max. 24 characters (A–Z, a–z, 0–9, =, [hyphen], [underscore])

Note

The first character must be a letter, number, or =.

27.3.2 Network Service—[3-2] Client Feature—Syslog

Settings can be programmed for a Syslog client connection.

◆ Remote Syslog

Specifies whether an external Syslog server will be used with the PBX.

Value Range

Enable, Disable

◆ Remote Syslog server—IP address / Host name

Specifies the IP address or host name of the external Syslog server.

Value Range

1.0.0.0–223.255.255.255 (IP address), Max. 253 characters (host name)

◆ Port

Specifies the connection port for the remote Syslog server.

Value Range

514, 1024–65535

27.3.3 Network Service—[3-3] Client Feature—SNMP Agent

Using SNMP (Simple Network Management Protocol), it is possible for a PC assigned as an SNMP manager to manage and receive PBX system status information, such as alarm information and general system activity. The related PBX system settings can be programmed.
This option is only available at Installer level.

◆ SNMP agent

Enables the PBX to use its SNMP agent function.

Value Range

Disable, Enable

Feature Guide References

2.4.4 Simple Network Management Protocol (SNMP) System Monitor

◆ SNMP version

Specifies the version of the SNMP protocol to use.

Value Range

SNMP V1, SNMP V2c

Feature Guide References

2.4.4 Simple Network Management Protocol (SNMP) System Monitor

◆ SNMP manager port

Specifies the SNMP manager port.

Value Range

161, 1024–65535

Feature Guide References

2.4.4 Simple Network Management Protocol (SNMP) System Monitor

◆ MIB info—SysContact

Specifies the name and contact information of the system administrator.

Value Range

Max. 255 characters

Feature Guide References

2.4.4 Simple Network Management Protocol (SNMP) System Monitor

◆ MIB info—SysName

Specifies the administrative name for the system.

Value Range

Max. 255 characters

Feature Guide References

2.4.4 Simple Network Management Protocol (SNMP) System Monitor

◆ MIB info—SysLocation

Specifies the physical location for the system.

Value Range

Max. 255 characters

Feature Guide References

2.4.4 Simple Network Management Protocol (SNMP) System Monitor

SNMP Manager #1 / SNMP Manager #2

It is possible to assign up to two PCs as SNMP managers. The settings related to SNMP manager activity can be programmed for each SNMP manager, indicated as No.1 and No.2 on the screen.
This option is only available at Installer level.

◆ IP address

Specifies the IP address of an SNMP manager. Click the button next to **IP Address** and enter the address.

Value Range

1.0.0.0–223.255.255.255

Feature Guide References

2.4.4 Simple Network Management Protocol (SNMP) System Monitor

◆ Host name

Specifies the host name of an SNMP manager. Click the button next to **Host Name** and enter a name.

Value Range

Max. 253 characters (host name)

Feature Guide References

2.4.4 Simple Network Management Protocol (SNMP) System Monitor

◆ Trap port

Specifies a port number used to send trap messages from the agent to an SNMP manager.

Value Range

162, 1024–65535

Feature Guide References

2.4.4 Simple Network Management Protocol (SNMP) System Monitor

◆ Community name

Specifies a community name of an SNMP manager.

Value Range

Max. 32 characters

Feature Guide References

2.4.4 Simple Network Management Protocol (SNMP) System Monitor

◆ TRAP filtering—Standard TRAP

Selects whether the PBX sends standard trap messages to an SNMP manager or not.

Value Range

Disable, Enable

Feature Guide References

2.4.4 Simple Network Management Protocol (SNMP) System Monitor

◆ TRAP filtering—enterpriseSpecific (Major)

Selects whether the PBX sends Major Alarm trap messages to an SNMP manager or not.

Value Range

Disable, Enable

Feature Guide References

2.4.4 Simple Network Management Protocol (SNMP) System Monitor

◆ TRAP filtering—enterpriseSpecific (Minor)

Selects whether the PBX sends Minor Alarm trap messages to an SNMP manager or not.

Value Range

Disable, Enable

Feature Guide References

2.4.4 Simple Network Management Protocol (SNMP) System Monitor

27.4 Network Service—[4] Other

27.4.1 Network Service—[4-1] Other—Security

Network security settings can be programmed.

◆ ICMP Echo Reply—LAN Port

Specifies if the LAN port will send ICMP echo-replies to incoming ICMP echo-requests.

Value Range

Enable, Disable

◆ ICMP Echo Reply—Log Output

Specifies if the PBX logs ICMP echo-replies.

Value Range

Enable, Disable

27.4.2 Network Service—[4-2] Other—NAS

NAS settings can be programmed.

◆ NAS Status

Displays/changes the connection status of the NAS.

Value Range

Connected, Disconnected
To change the connection status of the NAS, perform the following:

- Click **Disconnect** to set the NAS to disconnect status.
- Click **Connect** to set the NAS to connect status.

◆ NAS Setting—Protocol

Specifies the communication protocol for the NAS connection.

Value Range

NFS, CIFS

◆ NAS Setting—NAS Address—IP Address

Specifies the IP address of the NAS.

Value Range

1.0.0.1–223.255.255.254

◆ NAS Setting—NAS Address—Name

Specifies the Name of the NAS.

Value Range

Max. 253 characters

◆ NAS Setting—Port No.

Specifies the NAS using port number.

Value Range

445, 1024–65535

◆ NAS Setting—Mount directory

Specifies the NAS mount directory.

Value Range

Max. 128 characters (multi-byte characters allowed)

◆ CIFS Setting—User Name

Specifies the NAS connection user name when **NAS Setting—Protocol** is set to **CIFS**.

Value Range

Max. 24 characters (multi-byte characters allowed)

◆ CIFS Setting—Password

Specifies the NAS connection password when **NAS Setting—Protocol** is set to **CIFS**.

Value Range

Max. 24 characters (multi-byte characters allowed)

Feature Programming References

Absent Message

- 10.6.1 PBX Configuration—[2-6-1] System—Numbering Plan—Main—Features—◆ Absent Message Set / Cancel
- 12.1.1 PBX Configuration—[4-1-1] Extension—Wired Extension—Extension Settings—Option 3—◆ Absent Message
- 12.2.1 PBX Configuration—[4-2-1] Extension—Portable Station—Extension Settings—Option 3—◆ Absent Message
- 14.5 PBX Configuration—[6-5] Feature—Absent Message

Feature Guide References
2.20.2 Absent Message

Account Code Entry

- 10.6.1 PBX Configuration—[2-6-1] System—Numbering Plan—Main—Features—◆ Account Code Entry
- 10.7.1 PBX Configuration—[2-7-1] System—Class of Service—COS Settings—CO & SMDR—◆ Account Code Mode

Feature Guide References
2.5.4.3 Account Code Entry

Advice of Charge (AOC)

- 9.26 PBX Configuration—[1-1] Configuration—Slot—Port Property - PRI Port—Supplementary Service—◆ COLP, CLIR, COLR, CNIP, CONP, CNIR, CONR, CF (Rerouting), CT, CCBS, AOC-D, AOC-E, E911, 3PTY

Feature Guide References
4.1.2.3 Advice of Charge (AOC)

Automatic Callback Busy (Camp-on)

- 10.6.1 PBX Configuration—[2-6-1] System—Numbering Plan—Main—Features—◆ Automatic Callback Busy Cancel
- 10.6.3 PBX Configuration—[2-6-3] System—Numbering Plan—B/NA DND Call Feature—◆ Automatic Callback Busy

Feature Guide References
2.10.1 Automatic Callback Busy (Camp-on)

Automatic Extension Release

- 10.3 PBX Configuration—[2-3] System—Timers & Counters—Dial / IRNA / Recall / Tone
  - ◆ Dial—Extension First Digit (s)
  - ◆ Dial—Extension Inter-digit (s)
  - ◆ Tone Length—Reorder Tone for PT Handset (s)
  - ◆ Tone Length—Reorder Tone for PT Hands-free (s)

Feature Guide References
2.5.2 Automatic Extension Release

Automatic Fax Transfer

- 10.3 PBX Configuration—[2-3] System—Timers & Counters—◆ DISA—Intercept Timer—Day (s), Lunch (s), Break (s), Night (s)

- 13.3.2 PBX Configuration—[5-3-2] Optional Device—Voice Message—DISA Message—◆ Fax Extension

Feature Guide References
2.16.2 Automatic Fax Transfer

Automatic Route Selection (ARS)

- 6.5 Tool—Import
  - ARS - Leading Digit
  - ARS - Except Code
  - ARS - Routing Plan
- 6.6 Tool—Export
- 10.3 PBX Configuration—[2-3] System—Timers & Counters—Dial / IRNA / Recall / Tone—◆ Dial—Extension Inter-digit (s)
- 10.9 PBX Configuration—[2-9] System—System Options—Option 3—◆ Dial Tone—Dial Tone for ARS
- 12.1.1 PBX Configuration—[4-1-1] Extension—Wired Extension—Extension Settings—Option 1—◆ ARS Itemised Code
- 12.1.7 PBX Configuration—[4-1-7] Extension—Wired Extension—CLIP ID Table
- 12.2.1 PBX Configuration—[4-2-1] Extension—Portable Station—Extension Settings—Option 1—◆ ARS Itemised Code
- 12.2.5 PBX Configuration—[4-2-5] Extension—Portable Station—CLIP ID Table
- 14.3 PBX Configuration—[6-3] Feature—Verification Code—◆ Itemised Billing Code for ARS
- Section 16 PBX Configuration—[8] ARS
- 19.1 PBX Configuration—[11-1] Maintenance—Main—SMDR Options—◆ Option—ARS Dial

Feature Guide References
2.8.1 Automatic Route Selection (ARS)

Automatic Setup

- 10.1.1 PBX Configuration—[2-1-1] System—Date & Time—Date & Time Setting
- 10.1.2 PBX Configuration—[2-1-2] System—Date & Time—SNTP / Daylight Saving—◆ Automatic Time Adjustment
- 10.1.2.1 PBX Configuration—[2-1-2] System—Date & Time—SNTP / Daylight Saving—Daylight Saving
- 27.2.4 Network Service—[2-5] Server Feature—NTP—◆ NTP server

Feature Guide References
5.5.5 Automatic Setup

Background Music (BGM)

- 10.2 PBX Configuration—[2-2] System—Operator & BGM
- 10.6.1 PBX Configuration—[2-6-1] System—Numbering Plan—Main—Features
  - ◆ External BGM On / Off
  - ◆ BGM Set / Cancel
- 10.11.1 PBX Configuration—[2-11-1] System—Audio Gain—Paging/MOH
  - ◆ Internal MOH—MOH1-2 (Music On Hold 1-2)
- 13.2 PBX Configuration—[5-2] Optional Device—External Pager

Feature Guide References
2.30.1 Background Music (BGM)

Budget Management

- 12.1.1 PBX Configuration—[4-1-1] Extension—Wired Extension—Extension Settings—Option 3—◆ Charge Limit
- 12.2.1 PBX Configuration—[4-2-1] Extension—Portable Station—Extension Settings—Option 3—◆ Charge Limit
- 14.3 PBX Configuration—[6-3] Feature—Verification Code—◆ Budget Management
- 14.2 PBX Configuration—[6-2] Feature—Hotel & Charge—Charge—◆ Charge Options—Action at Charge Limit

Feature Guide References
2.7.2 Budget Management

Built-in Simplified Voice Message (SVM)

- 6.15.1 Tool—SVM (Simplified Voice Message)—Delete All Recording
- 6.15.2 Tool—SVM (Simplified Voice Message)—Check Current Usage
- 10.3 PBX Configuration—[2-3] System—Timers & Counters—Miscellaneous
  - ◆ SVM—Recording Time (s)
  - ◆ SVM—Dial Tone Continuous Time (s)
- 10.6.1 PBX Configuration—[2-6-1] System—Numbering Plan—Main—Features—◆ Simplified Voice Message Access
- 11.1.1 PBX Configuration—[3-1-1] Group—Trunk Group—TRG Settings—Tone Detection
  - ◆ DISA Tone Detection—Silence
  - ◆ DISA Tone Detection—Continuous
  - ◆ DISA Tone Detection—Cyclic
- 12.1.1 PBX Configuration—[4-1-1] Extension—Wired Extension—Extension Settings—Option 6—◆ Display Lock/SVM Lock
- 12.1.8 PBX Configuration-[4-1-8] Extension-Wired Extension-Simplified Voice Message
- 12.2.6 PBX Configuration-[4-2-6] Extension—Portable Station—Simplified Voice Message
- 13.3.3 PBX Configuration—[5-3-3] Option Device—Voice Message—SVM

Feature Guide References
2.16.3 Built-in Simplified Voice Message (SVM)

CA (Communication Assistant)

- 10.7.1 PBX Configuration—[2-7-1] System—Class of Service—COS Settings—CA
- 10.9 PBX Configuration—[2-9] System—System Options—Option 6 (CTI)
  → ◆ Built-in Communication Assistant—System status retry interval timer
  → ◆ Built-in Communication Assistant—System status retry counter
- 12.1.1 PBX Configuration—[4-1-1] Extension—Wired Extension—Extension Settings—Option 9—◆ Built-in Communication Assistant
- 12.2.1 PBX Configuration—[4-2-1] Extension—Portable Station—Extension Settings—Option 9—◆ Built-in Communication Assistant

Call Billing for Guest Room

- 12.1.1 PBX Configuration—[4-1-1] Extension—Wired Extension—Extension Settings—Main—◆ Extension PIN
- 14.2 PBX Configuration—[6-2] Feature—Hotel & Charge—◆ Checkout Billing—LCD for "Telephone"
- 14.2 PBX Configuration—[6-2] Feature—Hotel & Charge—Charge
  - ◆ Margin & Tax—Margin Rate for "Telephone" (%)
  - ◆ Margin & Tax—Tax Rate for "Telephone" (%)

- ◆ Margin & Tax—Tax Rate for "Minibar" (%)
- ◆ Margin & Tax—Tax Rate for "Others" (%)

Feature Guide References
2.23.3 Call Billing for Guest Room

Call Charge Services

- 11.1.5 PBX Configuration—[3-1-5] Group—Trunk Group—Charge Rate
- 12.1.4 PBX Configuration—[4-1-4] Extension—Wired Extension—Flexible Button—◆ Type
- 12.2.3 PBX Configuration—[4-2-3] Extension—Portable Station—Flexible Button—◆ Type
- 14.2 PBX Configuration—[6-2] Feature—Hotel & Charge—Charge
  - ◆ Margin & Tax—Margin Rate for "Telephone" (%)
  - ◆ Margin & Tax—Tax Rate for "Telephone" (%)
  - ◆ Charge Options—Digits After Decimal Point
  - ◆ Charge Options—Currency
  - ◆ Charge Options—Currency Display Position
  - ◆ Charge Options—Action at Charge Limit
  - ◆ Charge Options—Meter Start on Answer Detection

Feature Guide References
2.22.3 Call Charge Services

Call Distribution Port Group

- 9.11.2 PBX Configuration—[1-1] Configuration—Slot—V-IPGW—Shelf Property—Hunt Pattern—Hunt Pattern 1–16—◆ Leading Number
- 9.11.2 PBX Configuration—[1-1] Configuration—Slot—V-IPGW—Shelf Property—Hunt Pattern—Hunt Pattern 1–16—◆ Call Distribution Port Group—1st–16th
- 9.12 PBX Configuration—[1-1] Configuration—Slot—V-IPGW—Port Property—◆ Call Distribution Port Group

Feature Guide References
4.2.2.3 Call Distribution Port Group

Call Forwarding (CF)—by ISDN (P-P)

- 9.26 PBX Configuration—[1-1] Configuration—Slot—Port Property - PRI Port—Supplementary Service—◆ COLP, CLIR, COLR, CNIP, CONP, CNIR, CONR, CF (Rerouting), CT, CCBS, AOC-D, AOC-E, E911, 3PTY
- 10.6.1 PBX Configuration—[2-6-1] System—Numbering Plan—Main—Features—◆ ISDN-FWD (MSN) Set / Cancel / Confirm
- 10.7.1 PBX Configuration—[2-7-1] System—Class of Service—COS Settings—CO & SMDR

Feature Guide References
4.1.2.4 Call Forwarding (CF)—by ISDN (P-P)

Call Forwarding (CF)—by QSIG

- 9.26 PBX Configuration—[1-1] Configuration—Slot—Port Property - PRI Port—Supplementary Service—◆ COLP, CLIR, COLR, CNIP, CONP, CNIR, CONR, CF (Rerouting), CT, CCBS, AOC-D, AOC-E, E911, 3PTY

Feature Guide References
4.2.4.3 Call Forwarding (CF)—by QSIG

Call Forwarding (FWD)

- 10.6.1 PBX Configuration—[2-6-1] System—Numbering Plan—Main—Features—◆ FWD No Answer Timer Set
- 10.7.1 PBX Configuration—[2-7-1] System—Class of Service—COS Settings
  - CO & SMDR—◆ Call Forward to CO
  - Manager—◆ Group Forward Set
  - Optional Device & Other Extensions—◆ Remote Operation by Other Extension
- 11.1.1 PBX Configuration—[3-1-1] Group—Trunk Group—TRG Settings—Main
  - ◆ CO-CO Duration Time (*60s)
  - ◆ Extension-CO Duration Time (*60s)
- 11.5.1 PBX Configuration—[3-5-1] Group—Incoming Call Distribution Group—Group Settings—Group Log / Group FWD
- 12.1.1 PBX Configuration—[4-1-1] Extension—Wired Extension—Extension Settings—FWD / DND
- 12.1.2 PBX Configuration—[4-1-2] Extension—Wired Extension—FWD/DND
- 12.2.1 PBX Configuration—[4-2-1] Extension—Portable Station—Extension Settings—FWD / DND
- 12.2.2 PBX Configuration—[4-2-2] Extension—Portable Station—FWD/DND

Feature Guide References
2.3.2 Call Forwarding (FWD)

Call Hold

- 10.3 PBX Configuration—[2-3] System—Timers & Counters—Dial / IRNA / Recall / Tone
  - ◆ Recall—Hold Recall (s)
  - ◆ Recall—Disconnect after Recall (x60s)
- 10.6.1 PBX Configuration—[2-6-1] System—Numbering Plan—Main—Features
  - ◆ Call Hold / Call Hold Retrieve
  - ◆ Call Hold Retrieve : Specified with a Holding Extension Number
  - ◆ Hold Retrieve : Specified with a Held CO Line Number
- 10.9 PBX Configuration—[2-9] System—System Options
  - Option 1—◆ PT Operation—Automatic Hold by ICM / CO / ICD Group Key
  - Option 1—◆ PT Operation—Hold key mode
  - Option 5—◆ SLT—SLT Hold Mode

Feature Guide References
2.13.1 Call Hold

Call Hold (HOLD)—by ISDN

- 10.6.1 PBX Configuration—[2-6-1] System—Numbering Plan—Main—Features—◆ ISDN Hold
- 12.1.4 PBX Configuration—[4-1-4] Extension—Wired Extension—Flexible Button—◆ Type
- 12.2.3 PBX Configuration—[4-2-3] Extension—Portable Station—Flexible Button—◆ Type

Feature Guide References
4.1.2.5 Call Hold (HOLD)—by ISDN

Call Monitor

- 10.6.3 PBX Configuration—[2-6-3] System—Numbering Plan—B/NA DND Call Feature—◆ Call Monitor
- 10.7.1 PBX Configuration—[2-7-1] System—Class of Service—COS Settings—Executive—◆ Call Monitor
- 12.1.1 PBX Configuration—[4-1-1] Extension—Wired Extension—Extension Settings
  - Option 2—◆ Data Mode
  - Option 3—◆ Executive Override Deny

- 12.2.1 PBX Configuration—[4-2-1] Extension—Portable Station—Extension Settings—Option 3—◆ Executive Override Deny

Feature Guide References
2.10.3 Call Monitor

Call Park

- 10.3 PBX Configuration—[2-3] System—Timers & Counters
  - ◆ Recall—Call Park Recall (s)
  - ◆ Recall—Disconnect after Recall (x60s)
- 10.6.1 PBX Configuration—[2-6-1] System—Numbering Plan—Main—Features—◆ Call Park / Call Park Retrieve
- 12.1.4 PBX Configuration—[4-1-4] Extension—Wired Extension—Flexible Button
  - ◆ Type
  - ◆ Parameter Selection (for Call Park)
  - ◆ Optional Parameter (Ringing Tone Type Number) (for Call Park)
- 12.2.3 PBX Configuration—[4-2-3] Extension—Portable Station—Flexible Button
  - ◆ Type
  - ◆ Parameter Selection (for Call Park)
  - ◆ Optional Parameter (or Ringing Tone Type Number) (for Call Park)

Feature Guide References
2.13.2 Call Park

Call Pickup

- 10.6.1 PBX Configuration—[2-6-1] System—Numbering Plan—Main—Features
  - ◆ Group Call Pickup
  - ◆ Directed Call Pickup
  - ◆ Call Pickup Deny Set / Cancel
- 10.9 PBX Configuration—[2-9] System—System Options—Option 4
- 11.3 PBX Configuration—[3-3] Group—Call Pickup Group
- 12.1.1 PBX Configuration—[4-1-1] Extension—Wired Extension—Extension Settings—Option 3—◆ Call Pickup Deny
- 12.2.1 PBX Configuration—[4-2-1] Extension—Portable Station—Extension Settings—Option 3—◆ Call Pickup Deny

Feature Guide References
2.4.3 Call Pickup

Call Transfer

- 10.2 PBX Configuration—[2-2] System—Operator & BGM—◆ BGM and Music on Hold—Sound on Transfer
- 10.3 PBX Configuration—[2-3] System—Timers & Counters—Dial / IRNA / Recall / Tone—◆ Recall—Transfer Recall (s)
- 10.7.1 PBX Configuration—[2-7-1] System—Class of Service—COS Settings
  - CO & SMDR—◆ Transfer to CO
  - Assistant—◆ Transfer to busy Extension w/o BSS Operation
- 10.9 PBX Configuration—[2-9] System—System Options—Option 4—◆ DSS Key—Automatic Transfer for Extension Call
- 12.1.1 PBX Configuration—[4-1-1] Extension—Wired Extension—Extension Settings—Option 1—◆ Transfer Recall Destination

- 12.2.1 PBX Configuration—[4-2-1] Extension—Portable Station—Extension Settings—Option 1—◆ Transfer Recall Destination

Feature Guide References
2.12.1 Call Transfer

Call Transfer (CT)—by ISDN

- 9.26 PBX Configuration—[1-1] Configuration—Slot—Port Property - PRI Port—Supplementary Service—◆ COLP, CLIR, COLR, CNIP, CONP, CNIR, CONR, CF (Rerouting), CT, CCBS, AOC-D, AOC-E, E911, 3PTY

Feature Guide References
4.1.2.6 Call Transfer (CT)—by ISDN

Call Transfer (CT)—by QSIG

- 9.26 PBX Configuration—[1-1] Configuration—Slot—Port Property - PRI Port—Supplementary Service—◆ COLP, CLIR, COLR, CNIP, CONP, CNIR, CONR, CF (Rerouting), CT, CCBS, AOC-D, AOC-E, E911, 3PTY

Feature Guide References
4.2.4.4 Call Transfer (CT)—by QSIG

Call Waiting

- 9.23 PBX Configuration—[1-1] Configuration—Slot—Card Property - LCO type—◆ Caller ID—Caller ID Signalling
- 10.6.1 PBX Configuration—[2-6-1] System—Numbering Plan—Main—Features
  - ◆ Manual Call Waiting for Extension Call
  - ◆ Automatic Call Waiting
- 10.6.3 PBX Configuration—[2-6-3] System—Numbering Plan—B/NA DND Call Feature
  - ◆ BSS / OHCA / Whisper OHCA / DND Override
  - ◆ BSS / OHCA / Whisper OHCA / DND Override-2
- 10.9 PBX Configuration—[2-9] System—System Options—Option 5—◆ Call Waiting—Automatic Call Waiting for Extension Call
- 12.1.1 PBX Configuration—[4-1-1] Extension—Wired Extension—Extension Settings
  - Option 2—◆ Manual C. Waiting for Extension Call
  - Option 2—◆ Automatic C. Waiting
  - Option 4—◆ Call Waiting Tone Type
- 12.2.1 PBX Configuration—[4-2-1] Extension—Portable Station—Extension Settings
  - Option 2—◆ Manual C. Waiting for Extension Call
  - Option 2—◆ Automatic C. Waiting
  - Option 4—◆ Call Waiting Tone Type

Feature Guide References
2.1.3.3 Call Waiting

Call Waiting Tone

- 10.3 PBX Configuration—[2-3] System—Timers & Counters—Miscellaneous—◆ Caller ID—Visual Caller ID Display (s)
- 10.6.3 PBX Configuration—[2-6-3] System—Numbering Plan—B/NA DND Call Feature
  - ◆ BSS / OHCA / Whisper OHCA / DND Override
  - ◆ BSS / OHCA / Whisper OHCA / DND Override-2

- 12.1.1 PBX Configuration—[4-1-1] Extension—Wired Extension—Extension Settings
  - Option 2—◆ Manual C. Waiting for Extension Call
  - Option 2—◆ Automatic C. Waiting
  - Option 4—◆ Call Waiting Tone Type
- 12.2.1 PBX Configuration—[4-2-1] Extension—Portable Station—Extension Settings
  - Option 2—◆ Manual C. Waiting for Extension Call
  - Option 2—◆ Automatic C. Waiting
  - Option 4—◆ Call Waiting Tone Type

Feature Guide References
2.10.4.2 Call Waiting Tone

Caller ID

- 10.3 PBX Configuration—[2-3] System—Timers & Counters—Miscellaneous
  - ◆ Caller ID—Waiting to receive (s)
  - ◆ Caller ID—Visual Caller ID Display (s)
- 10.9 PBX Configuration—[2-9] System—System Options—Option 4—◆ Private Network—Public Call through Private Network—Minimum Public Caller ID Digits
- 10.10 PBX Configuration—[2-10] System—Extension CID Settings
- 11.1.1 PBX Configuration—[3-1-1] Group—Trunk Group—TRG Settings—Main—◆ Caller ID Modification Table
- 11.1.3 PBX Configuration—[3-1-3] Group—Trunk Group—Caller ID Modification
- 12.1.1 PBX Configuration—[4-1-1] Extension—Wired Extension—Extension Settings—Option 8
  - ◆ Extension Caller ID Sending
  - ◆ Incoming Call Wait Timer for Extension Caller ID
- 14.1 PBX Configuration—[6-1] Feature—System Speed Dial

Feature Guide References
2.19.1 Caller ID

Calling Line Identification (CLI) Distribution

- 14.1 PBX Configuration—[6-1] Feature—System Speed Dial
  - ◆ Name
  - ◆ CO Line Access Number + Telephone Number
  - ◆ CLI Destination
- 18.2 PBX Configuration—[10-2] CO & Incoming Call—DIL Table & Port Settings—CLI for DIL—◆ CLI Ring for DIL—Day, Lunch, Break, Night
- 18.3 PBX Configuration—[10-3] CO & Incoming Call—DDI / DID Table—◆ CLI Ring for DDI/DID—Day, Lunch, Break, Night

Feature Guide References
2.1.1.4 Calling Line Identification (CLI) Distribution

Calling Party Control (CPC) Signal Detection

- 9.24 PBX Configuration—[1-1] Configuration—Slot—Port Property - LCO Port—◆ CPC Signal Detection Time—Outgoing, Incoming

Feature Guide References
2.11.9 Calling Party Control (CPC) Signal Detection

Calling/Connected Line Identification Presentation (CLIP/COLP)

- 9.26 PBX Configuration—[1-1] Configuration—Slot—Port Property - PRI Port
  - CO Setting—◆ Subscriber Number
  - Supplementary Service—◆ COLP, CLIR, COLR, CNIP, CONP, CNIR, CONR, CF (Rerouting), CT, CCBS, AOC-D, AOC-E, E911, 3PTY
- 10.6.1 PBX Configuration—[2-6-1] System—Numbering Plan—Main—Features
  - ◆ COLR Set / Cancel
  - ◆ CLIR Set / Cancel
  - ◆ Switch CLIP of CO Line / Extension
- 10.9 PBX Configuration—[2-9] System—System Options—Option 4
  - ◆ Send CLIP of CO Caller—when call is transferred to CO (CLIP of Held Party)
  - ◆ Send CLIP of CO Caller—when call is forwarded to CO
  - ◆ Send CLIP of Extension Caller—when call is forwarded to CO
- 11.5.1 PBX Configuration—[3-5-1] Group—Incoming Call Distribution Group—Group Settings—Main—◆ CLIP on ICD Group Button
- 12.1.1 PBX Configuration—[4-1-1] Extension—Wired Extension—Extension Settings
  - Main—◆ Extension Number
  - CLIP—◆ CLIP ID
  - CLIP—◆ CLIP on Extension/CO
  - CLIP—◆ CLIR
  - CLIP—◆ COLR
- 12.1.4 PBX Configuration—[4-1-4] Extension—Wired Extension—Flexible Button—◆ Type
- 12.2.1 PBX Configuration—[4-2-1] Extension—Portable Station—Extension Settings
  - CLIP—◆ CLIP ID
  - CLIP—◆ CLIP on Extension/CO
  - CLIP—◆ CLIR
  - CLIP—◆ COLR
- 12.2.3 PBX Configuration—[4-2-3] Extension—Portable Station—Flexible Button—◆ Type

Feature Guide References
4.1.2.2 Calling/Connected Line Identification Presentation (CLIP/COLP)

Calling/Connected Line Identification Presentation (CLIP/COLP) and Calling/Connected Name Identification Presentation (CNIP/CONP)—by QSIG

- 9.26 PBX Configuration—[1-1] Configuration—Slot—Port Property - PRI Port—Supplementary Service—◆ COLP, CLIR, COLR, CNIP, CONP, CNIR, CONR, CF (Rerouting), CT, CCBS, AOC-D, AOC-E, E911, 3PTY
- 10.6.1 PBX Configuration—[2-6-1] System—Numbering Plan—Main—Features
  - ◆ COLR Set / Cancel
  - ◆ CLIR Set / Cancel
- 12.1.1 PBX Configuration—[4-1-1] Extension—Wired Extension—Extension Settings—Main
  - ◆ Extension Number
  - ◆ Extension Name
- 12.2.1 PBX Configuration—[4-2-1] Extension—Portable Station—Extension Settings—Main
  - ◆ Extension Number
  - ◆ Extension Name

Feature Guide References
4.2.4.2 Calling/Connected Line Identification Presentation (CLIP/COLP) and Calling/Connected Name Identification Presentation (CNIP/CONP)—by QSIG

Centralised Voice Mail

- 17.1 PBX Configuration—[9-1] Private Network—TIE Table—Enhanced QSIG
- 17.2 PBX Configuration—[9-2] Private Network—Network Data Transmission
  - ◆ Network MSW Data Transmission for Centralised VM Feature—Data Re-transmission : Repeat Counter
  - ◆ Network MSW Data Transmission for Centralised VM Feature—Data Re-transmission : Repeat Timer
- 19.1 PBX Configuration—[11-1] Maintenance—Main—Maintenance
  - ◆ Error Log for Centralised VM—Network MSW Transmission (Counter)
  - ◆ Error Log for Centralised VM—Network MSW Transmission (Buffer)

Feature Guide References
4.2.5.2 Centralised Voice Mail

Class of Service (COS)

- 10.7.1 PBX Configuration—[2-7-1] System—Class of Service—COS Settings
- 12.1.1 PBX Configuration—[4-1-1] Extension—Wired Extension—Extension Settings—Main—◆ COS
- 12.2.1 PBX Configuration—[4-2-1] Extension—Portable Station—Extension Settings—Main—◆ COS

Feature Guide References
5.1.1 Class of Service (COS)

Common Extension Numbering for 2 PBXs

- 17.1 PBX Configuration—[9-1] Private Network—TIE Table

Feature Guide References
4.2.1.4 Common Extension Numbering for 2 PBXs

Common Extension Numbering for Multiple PBXs

- 17.1 PBX Configuration—[9-1] Private Network—TIE Table
- 18.4 PBX Configuration—[10-5] CO & Incoming Call—Miscellaneous—◆ Intercept—Routing to Operator - No Destination (Destination is not programmed.)

Feature Guide References
4.2.2.2 Common Extension Numbering for Multiple PBXs

Completion of Calls to Busy Subscriber (CCBS)

- 9.26 PBX Configuration—[1-1] Configuration—Slot—Port Property - PRI Port—Supplementary Service
  - ◆ COLP, CLIR, COLR, CNIP, CONP, CNIR, CONR, CF (Rerouting), CT, CCBS, AOC-D, AOC-E, E911, 3PTY
  - ◆ CCBS Type
  - ◆ CCBS Delete Digits

Feature Guide References
4.1.2.9 Completion of Calls to Busy Subscriber (CCBS)

Completion of Calls to Busy Subscriber (CCBS)—by QSIG

- 9.26 PBX Configuration—[1-1] Configuration—Slot—Port Property - PRI Port—Supplementary Service—◆ COLP, CLIR, COLR, CNIP, CONP, CNIR, CONR, CF (Rerouting), CT, CCBS, AOC-D, AOC-E, E911, 3PTY

Feature Guide References
4.2.4.5 Completion of Calls to Busy Subscriber (CCBS)—by QSIG

Computer Telephony Integration (CTI)

- 10.6.1 PBX Configuration—[2-6-1] System—Numbering Plan—Main—Features—◆ Dial Information (CTI)
- 10.9 PBX Configuration—[2-9] System—System Options—Option 6 (CTI)

Feature Guide References
2.26.1 Computer Telephony Integration (CTI)

Conference

- 10.3 PBX Configuration—[2-3] System—Timers & Counters—DISA / Door / Reminder / U. Conf
  - ◆ Unattended Conference—Recall Start Timer (x60s)
  - ◆ Unattended Conference—Warning Tone Start Timer (s)
  - ◆ Unattended Conference—Disconnect Timer (s)
- 10.7.1 PBX Configuration—[2-7-1] System—Class of Service—COS Settings—CO & SMDR—◆ Transfer to CO
- 10.9 PBX Configuration—[2-9] System—System Options—Option 2—◆ CO - CO Call Limitation—After Conference
- 10.9 PBX Configuration—[2-9] System—System Options—Option 3
  - ◆ Confirmation Tone—Tone 4-1 : Start Conference
  - ◆ Confirmation Tone—Tone 4-2 : Finish Conference
  - ◆ Echo Cancel—Conference
- 10.9 PBX Configuration—[2-9] System—System Options—Option 8—◆ Conference Group—Maximum Number of Speakers During a Conference Group Call
- 12.1.4 PBX Configuration—[4-1-4] Extension—Wired Extension—Flexible Button—◆ Type
- 12.2.3 PBX Configuration—[4-2-3] Extension—Portable Station—Flexible Button—◆ Type

Feature Guide References
2.14.2 Conference

Conference Group Call

- 10.3 PBX Configuration—[2-3] System—Timers & Counters—Miscellaneous—◆ Conference Group Call—Ring Duration (s)
- 10.6.1 PBX Configuration—[2-6-1] System—Numbering Plan—Main—Features—◆ Conference Group Call Operation
- 10.7.1 PBX Configuration—[2-7-1] System—Class of Service—COS Settings—Miscellaneous—◆ Conference Group Call Operation
- 10.9 PBX Configuration—[2-9] System—System Options—Option 8—◆ Conference Group—Maximum Number of Speakers During a Conference Group Call
- 11.9 PBX Configuration—[3-9] Group—Conference Group
- 11.9.1 PBX Configuration—[3-9] Group—Conference Group—Member List

Feature Guide References
2.15.1 Conference Group Call

Confirmation Tone

- 10.9 PBX Configuration—[2-9] System—System Options—Option 3
  - ◆ Confirmation Tone—Tone 1 : Called by Voice
  - ◆ Confirmation Tone—Tone 2 : Paged / Automatic Answer

- ◆ Confirmation Tone—Tone 3-1 : Start Talking after Making Call / Call from DOORPHONE
- ◆ Confirmation Tone—Tone 3-2 : Start Talking after Answering Call
- ◆ Confirmation Tone—Tone 4-1 : Start Conference
- ◆ Confirmation Tone—Tone 4-2 : Finish Conference
- ◆ Confirmation Tone—Tone 5 : Hold

Feature Guide References
2.25.2 Confirmation Tone

Data Line Security

- 10.6.1 PBX Configuration—[2-6-1] System—Numbering Plan—Main—Features—◆ Data Line Security Set / Cancel
- 12.1.1 PBX Configuration—[4-1-1] Extension—Wired Extension—Extension Settings—Option 2—◆ Data Mode

Feature Guide References
2.11.5 Data Line Security

Dial Tone

- 10.9 PBX Configuration—[2-9] System—System Options—Option 3
  - ◆ Dial Tone—Distinctive Dial Tone
  - ◆ Dial Tone—Dial Tone for Extension
  - ◆ Dial Tone—Dial Tone for ARS

Feature Guide References
2.25.1 Dial Tone

Dial Tone Transfer

- 12.1.4 PBX Configuration—[4-1-4] Extension—Wired Extension—Flexible Button
  - ◆ Type
  - ◆ Parameter Selection (for TRS Level Change)
- 12.2.3 PBX Configuration—[4-2-3] Extension—Portable Station—Flexible Button
  - ◆ Type
  - ◆ Parameter Selection (for TRS Level Change)

Feature Guide References
2.7.4 Dial Tone Transfer

Dial Type Selection

- 9.24 PBX Configuration—[1-1] Configuration—Slot—Port Property - LCO Port
  - ◆ Dialling Mode
  - ◆ DTMF Width
  - ◆ Pulse Speed

Feature Guide References
2.5.4.4 Dial Type Selection

Direct In Line (DIL)

- 18.2 PBX Configuration—[10-2] CO & Incoming Call—DIL Table & Port Settings—DIL
  - ◆ DIL Destination—Day, Lunch, Break, Night

- ◆ Tenant Number
- ◆ UM Service Group No.
- ◆ VM Trunk Group No.

Feature Guide References
2.1.1.2 Direct In Line (DIL)

Direct Inward Dialling (DID)/Direct Dialling In (DDI)

- 10.3 PBX Configuration—[2-3] System—Timers & Counters—Miscellaneous—◆ Incoming Call Inter-digit Timer—DDI / DID (s)
- 18.2 PBX Configuration—[10-2] CO & Incoming Call—DIL Table & Port Settings—DDI/DID/TIE
  - ◆ Distribution Method
  - ◆ DDI/DID/TIE—Remove Digit
  - ◆ DDI/DID/TIE—Additional Dial
- 18.3 PBX Configuration—[10-3] CO & Incoming Call—DDI / DID Table

Feature Guide References
2.1.1.3 Direct Inward Dialling (DID)/Direct Dialling In (DDI)

Direct Inward System Access (DISA)

- 10.3 PBX Configuration—[2-3] System—Timers & Counters—DISA / Door / Reminder / U. Conf
  - ◆ DISA—Delayed Answer Timer (s)
  - ◆ DISA—Mute & OGM Start Timer after answering (s)
  - ◆ DISA—No Dial Intercept Timer (s)
  - ◆ DISA—2nd Dial Timer for AA (s)
  - ◆ DISA—Intercept Timer—Day (s), Lunch (s), Break (s), Night (s)
  - ◆ DISA—Disconnect Timer after Intercept (s)
  - ◆ DISA—CO-to-CO Call Prolong Counter
  - ◆ DISA—CO-to-CO Call Prolong Time (x60s)
  - ◆ DISA—Progress Tone Continuation Time before Recording Message (s)
  - ◆ DISA—Reorder Tone Duration (s)
- 10.3 PBX Configuration—[2-3] System—Timers & Counters—Miscellaneous—◆ Extension PIN—Lock Counter
- 10.7.1 PBX Configuration—[2-7-1] System—Class of Service—COS Settings—Optional Device & Other Extensions—◆ Accept the Call from DISA
- 11.1.1 PBX Configuration—[3-1-1] Group—Trunk Group—TRG Settings—Tone Detection
  - ◆ DISA Tone Detection—Silence
  - ◆ DISA Tone Detection—Continuous
  - ◆ DISA Tone Detection—Cyclic
- 12.1.1 PBX Configuration—[4-1-1] Extension—Wired Extension—Extension Settings—Intercept Destination—◆ Intercept Destination—When called party does not answer—Day, Lunch, Break, Night
- 12.2.1 PBX Configuration—[4-2-1] Extension—Portable Station—Extension Settings—Intercept Destination—◆ Intercept Destination—When called party does not answer—Day, Lunch, Break, Night
- 13.3.1 PBX Configuration—[5-3-1] Optional Device—Voice Message—DISA System
- 13.3.2 PBX Configuration—[5-3-2] Optional Device—Voice Message—DISA Message

Feature Guide References
2.16.1 Direct Inward System Access (DISA)

Display Information

- 10.9 PBX Configuration—[2-9] System—System Options—Option 5—◆ PT Feature Access—No. 1–8

- 12.1.1 PBX Configuration—[4-1-1] Extension—Wired Extension—Extension Settings—Option 5
  - ◆ Display Language
  - ◆ Incoming Call Display
  - ◆ Automatic LCD Switch when Start Talking
- 12.2.1 PBX Configuration—[4-2-1] Extension—Portable Station—Extension Settings—Option 5
  - ◆ Display Language
  - ◆ Incoming Call Display
  - ◆ Automatic LCD Switch when Start Talking
- 14.2 PBX Configuration—[6-2] Feature—Hotel & Charge—Charge
  - ◆ Charge Options—Digits After Decimal Point
  - ◆ Charge Options—Currency
  - ◆ Charge Options—Currency Display Position
- 18.1 PBX Configuration—[10-1] CO & Incoming Call—CO Line Settings—◆ CO Name

Feature Guide References
2.21.4 Display Information

Do Not Disturb (DND)

- 10.3 PBX Configuration—[2-3] System—Timers & Counters—Dial / IRNA / Recall / Tone—◆ Tone Length—Busy Tone / DND Tone (s)
- 10.6.3 PBX Configuration—[2-6-3] System—Numbering Plan—B/NA DND Call Feature
  - ◆ BSS / OHCA / Whisper OHCA / DND Override
  - ◆ BSS / OHCA / Whisper OHCA / DND Override-2
- 10.7.1 PBX Configuration—[2-7-1] System—Class of Service—COS Settings—Assistant—◆ DND Override
- 12.1.1 PBX Configuration—[4-1-1] Extension—Wired Extension—Extension Settings—FWD / DND
- 12.1.2 PBX Configuration—[4-1-2] Extension—Wired Extension—FWD/DND
- 12.2.1 PBX Configuration—[4-2-1] Extension—Portable Station—Extension Settings—FWD / DND
- 12.2.2 PBX Configuration—[4-2-2] Extension—Portable Station—FWD/DND

Feature Guide References
2.3.3 Do Not Disturb (DND)

Door Open

- 9.33 PBX Configuration—[1-1] Configuration—Slot—DOORPHONE Card—Card Property
- 10.3 PBX Configuration—[2-3] System—Timers & Counters—DISA / Door / Reminder / U. Conf—◆ Doorphone—Open Duration (s)
- 10.6.1 PBX Configuration—[2-6-1] System—Numbering Plan—Main—Features—◆ Door Open
- 10.7.1 PBX Configuration—[2-7-1] System—Class of Service—COS Settings—Optional Device & Other Extensions—◆ Door Unlock

Feature Guide References
2.18.2 Door Open

Door Open

- 10.3 PBX Configuration—[2-3] System—Timers & Counters—DISA / Door / Reminder / U. Conf—◆ Doorphone—Open Duration (s)
- 10.6.1 PBX Configuration—[2-6-1] System—Numbering Plan—Main—Features—◆ Door Open
- 10.7.1 PBX Configuration—[2-7-1] System—Class of Service—COS Settings—Optional Device & Other Extensions—◆ Door Unlock

Feature Guide References
2.18.2 Door Open

Doorphone Call

- 10.3 PBX Configuration—[2-3] System—Timers & Counters—DISA / Door / Reminder / U. Conf
  - ◆ Doorphone—Call Ring Duration (x10s)
  - ◆ Doorphone—Call Duration (x10s)
- 10.6.1 PBX Configuration—[2-6-1] System—Numbering Plan—Main—Features—◆ DOORPHONE Call
- 10.7.1 PBX Configuration—[2-7-1] System—Class of Service—COS Settings—TRS—◆ TRS Level—Day, Lunch, Break, Night
- 10.8.2 PBX Configuration—[2-8-2] System—Ring Tone Patterns—Call from DOORPHONE
- 10.9 PBX Configuration—[2-9] System—System Options—Option 3—◆ Confirmation Tone—Tone 1 : Called by Voice
- 13.1 PBX Configuration—[5-1] Optional Device—Doorphone

Feature Guide References
2.18.1 Doorphone Call

Dynamic Host Configuration Protocol (DHCP) Assignment

- 27.2.1 Network Service—[2-1] Server Feature—DHCP

Feature Guide References
5.6.6 Dynamic Host Configuration Protocol (DHCP) Assignment

E-mail Notification for Extension Users

- 8.2.1 Users—Add User—Single User
- 20.1.2 UM Configuration—[1-2] Mailbox Settings—Full Setting—Notification Parameters—◆ E-mail/Text Message Device—Device No. 1, 2, 3—E-mail Address
- 27.2.5 Network Service—[2-6] Server Feature—SMTP

Feature Guide References
5.4.1 E-mail Notification for Extension Users

E-mail Notification of System-level Events

- 5.1 System Control—Program Update
- 7.7 Utility—Email Notification
- 8.2.1 Users—Add User—Single User
- 27.2.5 Network Service—[2-6] Server Feature—SMTP

Feature Guide References
5.4.2 E-mail Notification of System-level Events

Emergency Call

- 15.4 PBX Configuration—[7-4] TRS—Emergency Dial

Feature Guide References
2.5.4.2 Emergency Call

Enhanced Walking Extension

- 10.6.1 PBX Configuration—[2-6-1] System—Numbering Plan—Main—Features—◆ Walking Extension

Feature Guide References
2.24.3.2 Enhanced Walking Extension

Executive Busy Override

- 10.6.1 PBX Configuration—[2-6-1] System—Numbering Plan—Main—Features—◆ Executive Override Deny Set / Cancel
- 10.6.3 PBX Configuration—[2-6-3] System—Numbering Plan—B/NA DND Call Feature—◆ Executive Busy Override
- 10.7.1 PBX Configuration—[2-7-1] System—Class of Service—COS Settings—Executive
  - ◆ Executive Busy Override
  - ◆ Executive Busy Override Deny
- 10.9 PBX Configuration—[2-9] System—System Options—Option 1—◆ PT Operation—One-touch Busy Override by SCO key
- 12.1.1 PBX Configuration—[4-1-1] Extension—Wired Extension—Extension Settings—Option 3—◆ Executive Override Deny
- 12.2.1 PBX Configuration—[4-2-1] Extension—Portable Station—Extension Settings—Option 3—◆ Executive Override Deny

Feature Guide References
2.10.2 Executive Busy Override

Extension Dial Lock

- 10.6.1 PBX Configuration—[2-6-1] System—Numbering Plan—Main—Features
  - ◆ Extension Dial Lock Set / Cancel
  - ◆ Remote Extension Dial Lock Off
  - ◆ Remote Extension Dial Lock On
- 10.7.1 PBX Configuration—[2-7-1] System—Class of Service—COS Settings—TRS—◆ TRS Level on Extension Lock

Feature Guide References
2.7.3 Extension Dial Lock

Extension Feature Clear

- 10.6.1 PBX Configuration—[2-6-1] System—Numbering Plan—Main—Features—◆ Extension Feature Clear
- 10.9 PBX Configuration—[2-9] System—System Options—Option 2
  - ◆ Extension Clear—Call Waiting
  - ◆ Extension Clear—Fwd/DND
  - ◆ Extension Clear—Hot Line (Pick-up Dial)

Feature Guide References
2.24.2 Extension Feature Clear

Extension Personal Identification Number (PIN)

- 10.3 PBX Configuration—[2-3] System—Timers & Counters—Miscellaneous—◆ Extension PIN—Lock Counter
- 10.6.1 PBX Configuration—[2-6-1] System—Numbering Plan—Main—Features—◆ Extension PIN Set / Cancel
- 10.9 PBX Configuration—[2-9] System—System Options—Option 1—◆ PT LCD—Password / PIN Display

- 12.1.1 PBX Configuration—[4-1-1] Extension—Wired Extension—Extension Settings—Main—◆ Extension PIN
- 12.2.1 PBX Configuration—[4-2-1] Extension—Portable Station—Extension Settings—Main—◆ Extension PIN

Feature Guide References
2.24.1 Extension Personal Identification Number (PIN)

External Feature Access (EFA)

- 9.24 PBX Configuration—[1-1] Configuration—Slot—Port Property - LCO Port—◆ Flash Time
- 10.6.1 PBX Configuration—[2-6-1] System—Numbering Plan—Main—Features—◆ External Feature Access
- 12.1.1 PBX Configuration—[4-1-1] Extension—Wired Extension—Extension Settings—Option 7—◆ Flash Mode during CO Conversation
- 12.1.4 PBX Configuration—[4-1-4] Extension—Wired Extension—Flexible Button—◆ Type
- 12.2.1 PBX Configuration—[4-2-1] Extension—Portable Station—Extension Settings—Option 7—◆ Flash Mode during CO Conversation
- 12.2.3 PBX Configuration—[4-2-3] Extension—Portable Station—Flexible Button—◆ Type
- 15.5 PBX Configuration—[7-5] TRS—Miscellaneous—◆ TRS Check after EFA

Feature Guide References
2.11.7 External Feature Access (EFA)

External Relay Control

- 9.33 PBX Configuration—[1-1] Configuration—Slot—DOORPHONE Card—Card Property
- 10.6.1 PBX Configuration—[2-6-1] System—Numbering Plan—Main—Features—◆ External Relay Access
- 10.7.1 PBX Configuration—[2-7-1] System—Class of Service—COS Settings—Optional Device & Other Extensions—◆ External Relay Access
- 13.4 PBX Configuration—[5-4] Optional Device—External Relay

Feature Guide References
2.18.4 External Relay Control

External Sensor

- 9.33 PBX Configuration—[1-1] Configuration—Slot—DOORPHONE Card—Card Property
- 10.3 PBX Configuration—[2-3] System—Timers & Counters—Miscellaneous—◆ External Sensor—Ring Duration (s)
- 10.8.3 PBX Configuration—[2-8-3] System—Ring Tone Patterns—Call from Others—◆ External Sensor—Ring Tone Pattern Plan 1–8
- 13.5 PBX Configuration—[5-5] Optional Device—External Sensor

Feature Guide References
2.18.3 External Sensor

Flash/Recall/Terminate

- 9.24 PBX Configuration—[1-1] Configuration—Slot—Port Property - LCO Port—◆ Disconnect Time
- 12.1.1 PBX Configuration—[4-1-1] Extension—Wired Extension—Extension Settings—Option 7—◆ Flash Mode during CO Conversation
- 12.1.4 PBX Configuration—[4-1-4] Extension—Wired Extension—Flexible Button—◆ Type
- 12.2.1 PBX Configuration—[4-2-1] Extension—Portable Station—Extension Settings—Option 7—◆ Flash Mode during CO Conversation

- 12.2.3 PBX Configuration—[4-2-3] Extension—Portable Station—Flexible Button—◆ Type

Feature Guide References
2.11.6 Flash/Recall/Terminate

Flexible Buttons

- 10.3 PBX Configuration—[2-3] System—Timers & Counters—Miscellaneous—◆ PT Display—PT Last Display Duration in Idle Mode (s)
- 12.1.4 PBX Configuration—[4-1-4] Extension—Wired Extension—Flexible Button
- 12.1.4.1 PBX Configuration—[4-1-4] Extension—Wired Extension—Flexible Button—Flexible button data copy
- 12.1.5 PBX Configuration—[4-1-5] Extension—Wired Extension—PF Button
- 12.2.3 PBX Configuration—[4-2-3] Extension—Portable Station—Flexible Button

Feature Guide References
2.21.2 Flexible Buttons

Flexible Numbering/Fixed Numbering

- 10.6.1 PBX Configuration—[2-6-1] System—Numbering Plan—Main
  - Extension
  - Features
  - Other PBX Extension
- 10.6.2 PBX Configuration—[2-6-2] System—Numbering Plan—Quick Dial
- 10.6.3 PBX Configuration—[2-6-3] System—Numbering Plan—B/NA DND Call Feature

Feature Guide References
5.5.7 Flexible Numbering/Fixed Numbering

Floating Extension

- 10.6.1 PBX Configuration—[2-6-1] System—Numbering Plan—Main—Extension
- 11.5.1 PBX Configuration—[3-5-1] Group—Incoming Call Distribution Group—Group Settings—Main
  - ◆ Floating Extension Number
  - ◆ Group Name
- 11.7.2 PBX Configuration—[3-7-2] Group—UM Group—Unit Settings—◆ Floating Extension No.
- 11.8 PBX Configuration—[3-8] Group—PS Ring Group—◆ Floating Extension Number
- 13.2 PBX Configuration—[5-2] Optional Device—External Pager—◆ Floating Extension Number
- 13.3.2 PBX Configuration—[5-3-2] Optional Device—Voice Message—DISA Message—◆ Floating Extension Number

Feature Guide References
5.5.8 Floating Extension

FWD/DND Button, Group FWD Button

- 10.6.1 PBX Configuration—[2-6-1] System—Numbering Plan—Main—Features
  - ◆ FWD/DND Set / Cancel: Call from CO & Extension
  - ◆ FWD/DND Set / Cancel: Call from CO
  - ◆ FWD/DND Set / Cancel: Call from Extension
  - ◆ Group FWD Set / Cancel: Call from CO & Extension
  - ◆ Group FWD Set / Cancel: Call from CO
  - ◆ Group FWD Set / Cancel: Call from Extension

- 10.9 PBX Configuration—[2-9] System—System Options—Option 1
  - ◆ PT Fwd / DND—Fwd LED
  - ◆ PT Fwd / DND—DND LED
  - ◆ PT Fwd / DND—Fwd/DND key mode when Idle
- 12.1.1 PBX Configuration—[4-1-1] Extension—Wired Extension—Extension Settings—FWD / DND
- 12.1.4 PBX Configuration—[4-1-4] Extension—Wired Extension—Flexible Button
  - ◆ Type
  - ◆ Extension Number (for Group Fwd (Both))
  - ◆ Extension Number (for Group Fwd (External))
  - ◆ Extension Number (for Group Fwd (Internal))
- 12.2.1 PBX Configuration—[4-2-1] Extension—Portable Station—Extension Settings—FWD / DND
- 12.2.3 PBX Configuration—[4-2-3] Extension—Portable Station—Flexible Button
  - ◆ Type
  - ◆ Extension Number (for Group Fwd (Both))
  - ◆ Extension Number (for Group Fwd (External))
  - ◆ Extension Number (for Group Fwd (Internal))

Feature Guide References
2.3.4 FWD/DND Button, Group FWD Button

Group

- Section 11 PBX Configuration—[3] Group

Feature Guide References
5.1.2 Group

Group Call Distribution

- 11.1.1 PBX Configuration—[3-1-1] Group—Trunk Group—TRG Settings—Main—◆ Line Hunting Order
- 11.5.1 PBX Configuration—[3-5-1] Group—Incoming Call Distribution Group—Group Settings
  - Main—◆ Distribution Method
  - Main—◆ Call Waiting Distribution
  - Miscellaneous—◆ Extension No Answer Redirection Time
  - Miscellaneous—◆ Maximum No. of Busy Extension
- 11.5.1.1 PBX Configuration—[3-5-1] Group—Incoming Call Distribution Group—Group Settings—Member List—◆ Delayed Ring
- 11.5.3 PBX Configuration—[3-5-3] Group—Incoming Call Distribution Group—Miscellaneous
  - ◆ Options—Wrap-up Timer based on
  - ◆ Options—Longest Idle Distribution
- 12.1.1 PBX Configuration—[4-1-1] Extension—Wired Extension—Extension Settings—Option 8—◆ Wrap-up Timer
- 12.2.1 PBX Configuration—[4-2-1] Extension—Portable Station—Extension Settings—Option 8—◆ Wrap-up Timer

Feature Guide References
2.2.2.2 Group Call Distribution

Hands-free Answerback

- 10.3 PBX Configuration—[2-3] System—Timers & Counters—Dial / IRNA / Recall / Tone—◆ Tone Length—Reorder Tone for PT Hands-free (s)
- 10.7.1 PBX Configuration—[2-7-1] System—Class of Service—COS Settings—Assistant—◆ Automatic Answer (Caller)

- 10.9 PBX Configuration—[2-9] System—System Options
  - Option 1—◆ PT Operation—Automatic Answer for Call from CO after
  - Option 3—◆ Confirmation Tone—Tone 2 : Paged / Automatic Answer
  - Option 4—◆ Transfer—Automatic Answer for Transferred Call
- 12.1.1 PBX Configuration—[4-1-1] Extension—Wired Extension—Extension Settings
  - Option 5—◆ Automatic Answer for CO Call
  - Option 6—◆ Forced Automatic Answer

Feature Guide References
2.4.4 Hands-free Answerback

Hands-free Operation

- 10.3 PBX Configuration—[2-3] System—Timers & Counters—Dial / IRNA / Recall / Tone—◆ Tone Length—Reorder Tone for PT Hands-free (s)
- 12.1.1 PBX Configuration—[4-1-1] Extension—Wired Extension—Extension Settings—Option 4—◆ LCS Answer Mode

Feature Guide References
2.11.1 Hands-free Operation

Headset Operation

- 12.1.4 PBX Configuration—[4-1-4] Extension—Wired Extension—Flexible Button—◆ Type

Feature Guide References
2.11.4 Headset Operation

Host PBX Access Code (Access Code to the Telephone Company from a Host PBX)

- 11.1.1 PBX Configuration—[3-1-1] Group—Trunk Group—TRG Settings—Host PBX Access Code
- 19.1 PBX Configuration—[11-1] Maintenance—Main—SMDR Options—◆ Option—ARS Dial

Feature Guide References
2.5.4.8 Host PBX Access Code (Access Code to the Telephone Company from a Host PBX)

Hot Line

- 10.3 PBX Configuration—[2-3] System—Timers & Counters—Dial / IRNA / Recall / Tone—◆ Dial—Hot Line (Pickup Dial) Start (s)
- 10.6.1 PBX Configuration—[2-6-1] System—Numbering Plan—Main—Features—◆ Hot Line (Pickup Dial) Program Set / Cancel
- 12.1.1 PBX Configuration—[4-1-1] Extension—Wired Extension—Extension Settings—Option 2
  - ◆ Pickup Dial Set
  - ◆ Pickup Dial No.
- 12.2.1 PBX Configuration—[4-2-1] Extension—Portable Station—Extension Settings—Option 2
  - ◆ Pickup Dial Set
  - ◆ Pickup Dial No.

Feature Guide References
2.6.6 Hot Line

Idle Extension Hunting

- 11.6 PBX Configuration—[3-6] Group—Extension Hunting Group

- 11.6.1 PBX Configuration—[3-6] Group—Extension Hunting Group—Member List

Feature Guide References
2.2.1 Idle Extension Hunting

Incoming Call Distribution Group Features

- 11.5.1 PBX Configuration—[3-5-1] Group—Incoming Call Distribution Group—Group Settings
  - Main
  - Overflow Queuing Busy
  - Overflow No Answer
  - Miscellaneous
- 11.5.1.1 PBX Configuration—[3-5-1] Group—Incoming Call Distribution Group—Group Settings—Member List
- 11.5.3 PBX Configuration—[3-5-3] Group—Incoming Call Distribution Group—Miscellaneous

Feature Guide References
2.2.2 Incoming Call Distribution Group Features

Incoming Call Log

- 10.9 PBX Configuration—[2-9] System—System Options—Option 7
  - ◆ Incoming Call Log—Busy/Intercept (when Called Party is Busy)
  - ◆ Incoming Call Log—Fwd All/Fwd Busy
  - ◆ Incoming Call Log—Call Pickup
  - ◆ Incoming Call Log—Extension / TIE Call
  - ◆ Outgoing Call Log—Extension Call
- 11.5.1 PBX Configuration—[3-5-1] Group—Incoming Call Distribution Group—Group Settings—Miscellaneous—◆ Supervisor Extension Number
- 12.1.1 PBX Configuration—[4-1-1] Extension—Wired Extension—Extension Settings
  - Option 5—◆ Incoming Call Display
  - Option 6—◆ Display Lock/SVM Lock
  - Option 7—◆ Incoming Call Log Memory
- 12.1.4 PBX Configuration—[4-1-4] Extension—Wired Extension—Flexible Button—◆ Type
- 12.2.1 PBX Configuration—[4-2-1] Extension—Portable Station—Extension Settings
  - Option 5—◆ Incoming Call Display
  - Option 7—◆ Incoming Call Log Memory

Feature Guide References
2.19.2 Incoming Call Log

Integrated Services Digital Network (ISDN) Service Features

- 9.25 PBX Configuration—[1-1] Configuration—Slot—Card Property - PRI type
- 9.26 PBX Configuration—[1-1] Configuration—Slot—Port Property - PRI Port
- 10.3 PBX Configuration—[2-3] System—Timers & Counters—Dial / IRNA / Recall / Tone—◆ Dial—Extension Inter-digit (s)
- 10.9 PBX Configuration—[2-9] System—System Options—Option 2—◆ ISDN en Bloc Dial—[#] as End of Dial for en Bloc mode
- 11.1.4.1 PBX Configuration—[3-1-4] Group—Trunk Group—Dialling Plan—Auto Assign
- 12.1.1 PBX Configuration—[4-1-1] Extension—Wired Extension—Extension Settings
  - Main—◆ Extension Number
  - Option 7—◆ ISDN Bearer

- 12.2.1 PBX Configuration—[4-2-1] Extension—Portable Station—Extension Settings—Option 7—◆ ISDN Bearer

Feature Guide References
4.1.2 Integrated Services Digital Network (ISDN) Service Features

Intercept Routing

- 10.3 PBX Configuration—[2-3] System—Timers & Counters—Dial / IRNA / Recall / Tone—◆ Intercept Routing No Answer (IRNA)—Day (s), Lunch (s), Break (s), Night (s)
- 10.3 PBX Configuration—[2-3] System—Timers & Counters—DISA / Door / Reminder / U. Conf—◆ DISA—Intercept Timer—Day (s), Lunch (s), Break (s), Night (s)
- 11.5.1 PBX Configuration—[3-5-1] Group—Incoming Call Distribution Group—Group Settings—Overflow No Answer—◆ Time out & Manual Queue Redirection—Destination-Day, Lunch, Break, Night
- 12.1.1 PBX Configuration—[4-1-1] Extension—Wired Extension—Extension Settings
  - Intercept Destination
  - Intercept No Answer Time
- 12.2.1 PBX Configuration—[4-2-1] Extension—Portable Station—Extension Settings
  - Intercept Destination
  - Intercept No Answer Time
- 18.4 PBX Configuration—[10-5] CO & Incoming Call—Miscellaneous

Feature Guide References
2.1.1.5 Intercept Routing

Intercept Routing—No Destination

- 10.2 PBX Configuration—[2-2] System—Operator & BGM—◆ PBX Operator—Day, Lunch, Break, Night
- 18.4 PBX Configuration—[10-5] CO & Incoming Call—Miscellaneous—◆ Intercept—Routing to Operator - No Destination (Destination is not programmed.)

Feature Guide References
2.1.1.6 Intercept Routing—No Destination

Intercom Call

- 10.6.3 PBX Configuration—[2-6-3] System—Numbering Plan—B/NA DND Call Feature—◆ Alternate Calling - Ring / Voice
- 12.1.1 PBX Configuration—[4-1-1] Extension—Wired Extension—Extension Settings
  - Main—◆ Extension Number
  - Main—◆ Extension Name
  - Option 3—◆ Intercom Call by Voice
- 12.2.1 PBX Configuration—[4-2-1] Extension—Portable Station—Extension Settings—Main
  - ◆ Extension Number
  - ◆ Extension Name

Feature Guide References
2.5.3 Intercom Call

Internal Call Block

- 10.7.3 PBX Configuration—[2-7-3] System—Class of Service—Internal Call Block—◆ COS Number of the Extension Which Receive the Call from Other Extension 1–64
- 11.5.1 PBX Configuration—[3-5-1] Group—Incoming Call Distribution Group—Group Settings—Main—◆ COS

- 12.1.1 PBX Configuration—[4-1-1] Extension—Wired Extension—Extension Settings—Main—◆ COS
- 12.2.1 PBX Configuration—[4-2-1] Extension—Portable Station—Extension Settings—Main—◆ COS
- 13.1 PBX Configuration—[5-1] Optional Device—Doorphone—◆ COS
- 13.4 PBX Configuration—[5-4] Optional Device—External Relay—◆ COS Number

Feature Guide References
2.1.2.2 Internal Call Block

Internal Call Features

- 13.1 PBX Configuration—[5-1] Optional Device—Doorphone—◆ Destination—Day, Lunch, Break, Night

Feature Guide References
2.1.2 Internal Call Features

IP Proprietary Telephone (IP-PT)

- 9.2.2 PBX Configuration—[1-1] Configuration—Slot—System Property—Site—Main—◆ IP Terminal Registration Mode
- 9.13 PBX Configuration—[1-1] Configuration—Slot—V-IPEXT—Card Property
- 9.14 PBX Configuration—[1-1] Configuration—Slot—V-IPEXT—Port Property

Feature Guide References
5.2.1 IP Proprietary Telephone (IP-PT)

ISDN Extension

- 9.26 PBX Configuration—[1-1] Configuration—Slot—Port Property - PRI Port—Extension Setting

Feature Guide References
5.2.5.1 ISDN Extension

ISDN Service Access by Keypad Protocol

- 12.1.4 PBX Configuration—[4-1-4] Extension—Wired Extension—Flexible Button
  - ◆ Type
  - ◆ Dial (for ISDN Service)
- 12.2.3 PBX Configuration—[4-2-3] Extension—Portable Station—Flexible Button
  - ◆ Type
  - ◆ Dial (for ISDN Service)

Feature Guide References
4.1.2.10 ISDN Service Access by Keypad Protocol

ISDN Virtual Private Network (ISDN-VPN)

- 9.26 PBX Configuration—[1-1] Configuration—Slot—Port Property - PRI Port—Network Numbering Plan—◆ Trunk Property
- 16.2 PBX Configuration—[8-2] ARS—Leading Number—◆ Leading Number
- 17.1 PBX Configuration—[9-1] Private Network—TIE Table
  - ◆ Leading Number
  - ◆ Removed Number of Digits
  - ◆ Added Number

Feature Guide References

4.2.3 ISDN Virtual Private Network (ISDN-VPN)

Last Number Redial

- 10.3 PBX Configuration—[2-3] System—Timers & Counters—Dial / IRNA / Recall / Tone
  - ◆ Automatic Redial—Repeat Counter
  - ◆ Automatic Redial—Repeat Interval (x10s)
  - ◆ Automatic Redial—Redial Call Ring Duration (x10s)
- 10.6.1 PBX Configuration—[2-6-1] System—Numbering Plan—Main—Features—◆ Redial
- 10.9 PBX Configuration—[2-9] System—System Options—Option 2
  - ◆ Redial—Automatic Redial when No Answer (ISDN)
  - ◆ Redial—Save Dial After Connection to Redial Memory
- 10.9 PBX Configuration—[2-9] System—System Options—Option 7
  - ◆ Outgoing Call Log—Extension Call
- 12.1.1 PBX Configuration—[4-1-1] Extension—Wired Extension—Extension Settings—Option 7—◆ Outgoing Call Log Memory
- 12.2.1 PBX Configuration—[4-2-1] Extension—Portable Station—Extension Settings—Option 7—◆ Outgoing Call Log Memory

Feature Guide References
2.6.3 Last Number Redial

LED Indication

- 10.9 PBX Configuration—[2-9] System—System Options
  - Option 1—◆ PT Fwd / DND—Fwd LED
  - Option 1—◆ PT Fwd / DND—DND LED

Feature Guide References
2.21.3 LED Indication

Legacy Device Connection

- 9.32 PBX Configuration—[1-1] Configuration—Slot—Expansion Unit1/Expansion Unit2/Expansion Unit3

Feature Guide References
5.3 Legacy Device Connection

Line Preference—Incoming

- 12.1.1 PBX Configuration—[4-1-1] Extension—Wired Extension—Extension Settings—Option 4—◆ Incoming Preferred Line
- 12.2.1 PBX Configuration—[4-2-1] Extension—Portable Station—Extension Settings—Option 4—◆ Incoming Preferred Line

Feature Guide References
2.4.2 Line Preference—Incoming

Line Preference—Outgoing

- 10.7.2 PBX Configuration—[2-7-2] System—Class of Service—External Call Block
- 11.1.2 PBX Configuration—[3-1-2] Group—Trunk Group—Local Access Priority
- 12.1.1 PBX Configuration—[4-1-1] Extension—Wired Extension—Extension Settings—Option 4—◆ Outgoing Preferred Line

- 12.2.1 PBX Configuration—[4-2-1] Extension—Portable Station—Extension Settings—Option 4—◆ Outgoing Preferred Line

Feature Guide References
2.5.5.2 Line Preference—Outgoing

Local Alarm Information

- 7.3.1 Utility—Log—Error Log
- 12.1.4 PBX Configuration—[4-1-4] Extension—Wired Extension—Flexible Button—◆ Type
- 12.2.3 PBX Configuration—[4-2-3] Extension—Portable Station—Flexible Button—◆ Type
- 19.1 PBX Configuration—[11-1] Maintenance—Main
  - SMDR—◆ Print Information—Error Log
  - Maintenance—◆ Local Alarm Display—Extension 1, Extension 2
  - Maintenance—◆ Daily Test Start Time—Set
  - Maintenance—◆ Daily Test Start Time—Hour
  - Maintenance—◆ Daily Test Start Time—Minute

Feature Guide References
5.6.4 Local Alarm Information

Log-in/Log-out

- 10.6.1 PBX Configuration—[2-6-1] System—Numbering Plan—Main—Features
  - ◆ Log-in / Log-out
  - ◆ Not Ready (Manual Wrap-up) Mode On / Off
- 11.5.1 PBX Configuration—[3-5-1] Group—Incoming Call Distribution Group—Group Settings—Miscellaneous
  - ◆ No. of Unanswered Calls for Automatic Log-out
  - ◆ Last Extension Log-out
- 11.5.1.1 PBX Configuration—[3-5-1] Group—Incoming Call Distribution Group—Group Settings—Member List—◆ Wrap-up Timer
- 11.5.3 PBX Configuration—[3-5-3] Group—Incoming Call Distribution Group—Miscellaneous—◆ Options—Wrap-up Timer based on
- 12.1.1 PBX Configuration—[4-1-1] Extension—Wired Extension—Extension Settings—Option 8—◆ Wrap-up Timer
- 12.1.4 PBX Configuration—[4-1-4] Extension—Wired Extension—Flexible Button
  - ◆ Type
  - ◆ Parameter Selection (for Log-in/Log-out)
  - ◆ Extension Number (for Log-in/Log-out)
- 12.2.1 PBX Configuration—[4-2-1] Extension—Portable Station—Extension Settings—Option 8—◆ Wrap-up Timer
- 12.2.3 PBX Configuration—[4-2-3] Extension—Portable Station—Flexible Button
  - ◆ Type
  - ◆ Parameter Selection (for Log-in/Log-out)
  - ◆ Extension Number (for Log-in/Log-out)
- 19.1 PBX Configuration—[11-1] Maintenance—Main—SMDR—◆ Print Information—Log-in / Log-out

Feature Guide References
2.2.2.7 Log-in/Log-out

Making a TIE Line Call

- 10.6.1 PBX Configuration—[2-6-1] System—Numbering Plan—Main—Features—◆ TIE Line Access

- 17.1 PBX Configuration—[9-1] Private Network—TIE Table—◆ Own PBX Code

Feature Guide References
4.2.1.1 Making a TIE Line Call

Malicious Call Identification (MCID)

- 10.6.1 PBX Configuration—[2-6-1] System—Numbering Plan—Main—Features—◆ MCID

Feature Guide References
4.1.2.8 Malicious Call Identification (MCID)

Manager Features

- 10.7.1 PBX Configuration—[2-7-1] System—Class of Service—COS Settings—Manager—◆ Manager
- 19.1 PBX Configuration—[11-1] Maintenance—Main—Password—◆ Manager Password - PT Programming—Prog *1

Feature Guide References
5.1.6 Manager Features

Message Waiting

- 9.16 PBX Configuration—[1-1] Configuration—Slot—V-SIPEXT—Port Property
- 10.6.1 PBX Configuration—[2-6-1] System—Numbering Plan—Main—Features—◆ Message Waiting Set / Cancel / Call Back
- 10.6.3 PBX Configuration—[2-6-3] System—Numbering Plan—B/NA DND Call Feature—◆ Message Waiting Set
- 10.9 PBX Configuration—[2-9] System—System Options
  - Option 3—◆ Dial Tone—Distinctive Dial Tone
  - Option 5—◆ SLT—Message Waiting Lamp Pattern
- 12.1.4 PBX Configuration—[4-1-4] Extension—Wired Extension—Flexible Button—◆ Type
- 12.2.3 PBX Configuration—[4-2-3] Extension—Portable Station—Flexible Button—◆ Type

Feature Guide References
2.20.1 Message Waiting

Music on Hold

- 10.2 PBX Configuration—[2-2] System—Operator & BGM
- 10.11.1 PBX Configuration—[2-11-1] System—Audio Gain—Paging/MOH
  - ◆ Internal MOH—MOH1-2 (Music On Hold 1-2)

Feature Guide References
2.13.4 Music on Hold

Network Direct Station Selection (NDSS)

- 9.26 PBX Configuration—[1-1] Configuration—Slot—Port Property - PRI Port—CO Setting—◆ Networking Data Transfer
- 10.7.1 PBX Configuration—[2-7-1] System—Class of Service—COS Settings—Manager—◆ Manager
- 12.1.4 PBX Configuration—[4-1-4] Extension—Wired Extension—Flexible Button
  - ◆ Type
  - ◆ Dial (for NDSS)
- 12.1.6 PBX Configuration—[4-1-6] Extension—Wired Extension—NDSS Link Data - Send

- 12.2.3 PBX Configuration—[4-2-3] Extension—Portable Station—Flexible Button
  - ◆ Type
  - ◆ Dial (for NDSS)
- 12.2.4 PBX Configuration—[4-2-4] Extension—Portable Station—NDSS Link Data - Send
- 17.2 PBX Configuration—[9-2] Private Network—Network Data Transmission
- 17.3 PBX Configuration—[9-3] Private Network—Network Operator (VoIP)
- 17.4 PBX Configuration—[9-4] Private Network—NDSS Key Table

Feature Guide References
4.2.5.1 Network Direct Station Selection (NDSS)

Network ICD Group

- 10.9 PBX Configuration—[2-9] System—System Options—Option 4
  - ◆ Send CLIP of CO Caller—when call is forwarded to CO
  - ◆ Send CLIP of Extension Caller—when call is forwarded to CO

Feature Guide References
4.2.6 Network ICD Group

Off-hook Call Announcement (OHCA)

- 10.6.3 PBX Configuration—[2-6-3] System—Numbering Plan—B/NA DND Call Feature
  - ◆ BSS / OHCA / Whisper OHCA / DND Override
  - ◆ BSS / OHCA / Whisper OHCA / DND Override-2
- 10.7.1 PBX Configuration—[2-7-1] System—Class of Service—COS Settings—Assistant—◆ OHCA / Whisper OHCA

Feature Guide References
2.10.4.3 Off-hook Call Announcement (OHCA)

Off-hook Monitor

- 10.9 PBX Configuration—[2-9] System—System Options—Option 1—◆ PT Operation—Off Hook Monitor

Feature Guide References
2.11.2 Off-hook Monitor

One-numbered Extension

- 10.6.1 PBX Configuration—[2-6-1] System—Numbering Plan—Main—Features—◆ Parallel Telephone (Ring) Mode Set / Cancel
- 12.1.1 PBX Configuration—[4-1-1] Extension—Wired Extension—Extension Settings
  - Option 1—◆ Wireless XDP / Shared Extension

Feature Guide References
2.11.11 One-numbered Extension

One-touch Dialling

- 12.1.1 PBX Configuration—[4-1-1] Extension—Wired Extension—Extension Settings—Option 6—◆ Flexible Button Programming Mode
- 12.1.4 PBX Configuration—[4-1-4] Extension—Wired Extension—Flexible Button
  - ◆ Type
  - ◆ Dial (for One-touch)

- 12.2.1 PBX Configuration—[4-2-1] Extension—Portable Station—Extension Settings—Option 6—◆ Flexible Button Programming Mode
- 12.2.3 PBX Configuration—[4-2-3] Extension—Portable Station—Flexible Button
  - ◆ Type
  - ◆ Dial (for One-touch)

Feature Guide References
2.6.2 One-touch Dialling

Operator Features

- 10.2 PBX Configuration—[2-2] System—Operator & BGM—◆ PBX Operator—Day, Lunch, Break, Night
- 14.6 PBX Configuration—[6-6] Feature—Tenant—◆ Operator (Extension Number)

Feature Guide References
5.1.5 Operator Features

Outgoing Message (OGM)

- 7.2.5 Utility—File—Message File Transfer PC to PBX
- 7.2.6 Utility—File—Message File Transfer PBX to PC
- 10.2 PBX Configuration—[2-2] System—Operator & BGM
- 10.3 PBX Configuration—[2-3] System—Timers & Counters—DISA / Door / Reminder / U. Conf—◆ DISA—Progress Tone Continuation Time before Recording Message (s)
- 10.6.1 PBX Configuration—[2-6-1] System—Numbering Plan—Main—Features—◆ OGM Record / Clear / Playback
- 11.5.1.1 PBX Configuration—[3-5-1] Group—Incoming Call Distribution Group—Group Settings—Member List—◆ Delayed Ring
- 11.5.2 PBX Configuration—[3-5-2] Group—Incoming Call Distribution Group—Queuing Time Table—◆ Queuing Sequence—Sequence 01–16
- 13.3.2 PBX Configuration—[5-3-2] Optional Device—Voice Message—DISA Message—◆ Floating Extension Number

Feature Guide References
2.30.2 Outgoing Message (OGM)

Outside Destinations in Incoming Call Distribution Group

- 10.9 PBX Configuration—[2-9] System—System Options—Option 4
  - ◆ Send CLIP of CO Caller—when call is forwarded to CO
  - ◆ Send CLIP of Extension Caller—when call is forwarded to CO

Feature Guide References
2.2.2.3 Outside Destinations in Incoming Call Distribution Group

Overflow Feature

- 11.5.1 PBX Configuration—[3-5-1] Group—Incoming Call Distribution Group—Group Settings
  - Overflow Queuing Busy
  - Overflow No Answer
- 11.5.2 PBX Configuration—[3-5-2] Group—Incoming Call Distribution Group—Queuing Time Table
- 11.5.3 PBX Configuration—[3-5-3] Group—Incoming Call Distribution Group—Miscellaneous—◆ Options—Overflow immediately when All Logout

Feature Guide References

2.2.2.6 Overflow Feature

Paging

- 10.6.1 PBX Configuration—[2-6-1] System—Numbering Plan—Main—Features
  - ◆ Group Paging
  - ◆ Group Paging Answer
  - ◆ Paging Deny Set / Cancel
- 10.9 PBX Configuration—[2-9] System—System Options
  - Option 1—◆ PT Fwd / DND—Paging to DND Extension
  - Option 3—◆ Confirmation Tone—Tone 2 : Paged / Automatic Answer
- 10.11.1 PBX Configuration—[2-11-1] System—Audio Gain—Paging/MOH
  - ◆ Paging—EPG 1-6 (External Pager 1-6)
  - ◆ Paging—Paging Level from PT Speaker
- 11.4 PBX Configuration—[3-4] Group—Paging Group
- 11.4.1 PBX Configuration—[3-4] Group—Paging Group—All Setting
- 11.4.2 PBX Configuration—[3-4] Group—Paging Group—External Pager
- 12.1.1 PBX Configuration—[4-1-1] Extension—Wired Extension—Extension Settings—Option 6—◆ Paging Deny

Feature Guide References
2.17.1 Paging

Pause Insertion

- 9.24 PBX Configuration—[1-1] Configuration—Slot—Port Property - LCO Port—◆ Pause Time
- 10.3 PBX Configuration—[2-3] System—Timers & Counters—Miscellaneous—◆ During Conversation—Pause Signal Time (s)
- 14.4 PBX Configuration—[6-4] Feature—Second Dial Tone

Feature Guide References
2.5.4.7 Pause Insertion

PDN (Primary Directory Number)/SDN (Secondary Directory Number) Extension

- 10.7.1 PBX Configuration—[2-7-1] System—Class of Service—COS Settings—PDN/SDN
- 10.9 PBX Configuration—[2-9] System—System Options
  - Option 4—◆ System Wireless—SDN Delayed Ringing with LCD
  - Option 6 (CTI)—◆ CTI Hold—Forced Idle when Hold by PDN/SDN Key
- 12.1.4 PBX Configuration—[4-1-4] Extension—Wired Extension—Flexible Button
  - ◆ Type
  - ◆ Parameter Selection (for SDN)
  - ◆ Extension Number (for SDN)
  - ◆ Optional Parameter (Ringing Tone Type Number) (for Loop CO, Single CO, Group CO, ICD Group, SDN)
- 12.2.3 PBX Configuration—[4-2-3] Extension—Portable Station—Flexible Button
  - ◆ Type
  - ◆ Parameter Selection (for SDN)
  - ◆ Extension Number (for SDN)
- 12.3 PBX Configuration—[4-3] Extension—DSS Console

Feature Guide References
2.9.1 Primary Directory Number (PDN)/Secondary Directory Number (SDN) Extension

Peer-to-Peer (P2P) Connection

- 9.14 PBX Configuration—[1-1] Configuration—Slot—V-IPEXT—Port Property—◆ P2P Group
- 9.16 PBX Configuration—[1-1] Configuration—Slot—V-SIPEXT—Port Property
- 10.9 PBX Configuration—[2-9] System—System Options—Option 8
  - ◆ P2P Group—Priority Voice 1/Priority Voice 2/Priority Voice 3
  - ◆ P2P Group—Video Conference
- 11.10 PBX Configuration—[3-10] Group—P2P Group

Feature Guide References
5.2.3 Peer-to-Peer (P2P) Connection

Ping

- 7.1.2 Utility—Diagnosis—Ping

Feature Guide References
5.6.7 PING Confirmation

Power Failure Transfer

Feature Guide References
5.6.2 Power Failure Transfer

Printing Message

- 10.6.1 PBX Configuration—[2-6-1] System—Numbering Plan—Main—Features—◆ Printing Message
- 14.2 PBX Configuration—[6-2] Feature—Hotel & Charge—Main—◆ SMDR for External Hotel Application 2—Printing Message 1–8

Feature Guide References
2.22.2 Printing Message

Privacy Release

- 10.9 PBX Configuration—[2-9] System—System Options—Option 1—◆ PT Operation—Privacy Release by SCO key
- 12.1.4 PBX Configuration—[4-1-4] Extension—Wired Extension—Flexible Button—◆ Type
- 12.2.3 PBX Configuration—[4-2-3] Extension—Portable Station—Flexible Button—◆ Type

Feature Guide References
2.14.3 Privacy Release

PT Programming

- 10.7.1 PBX Configuration—[2-7-1] System—Class of Service—COS Settings—Manager—◆ PT Programming Mode Level
- 19.1 PBX Configuration—[11-1] Maintenance—Main—Password
  - ◆ Manager Password - PT Programming—Prog *1

Feature Guide References
5.5.3 PT Programming

QSIG Enhanced Features

- 10.9 PBX Configuration—[2-9] System—System Options—Option 2—◆ CO - CO Call Limitation—After Conference

- 17.1 PBX Configuration—[9-1] Private Network—TIE Table—Enhanced QSIG

Feature Guide References
4.2.5 QSIG Enhanced Features

Queuing Feature

- 10.6.1 PBX Configuration—[2-6-1] System—Numbering Plan—Main—Features—◆ Incoming Call Queue Monitor
- 11.5.1 PBX Configuration—[3-5-1] Group—Incoming Call Distribution Group—Group Settings
  - Overflow Queuing Busy
  - Overflow No Answer
  - Queuing Time Table
  - Miscellaneous—◆ Extension No Answer Redirection Time
  - Miscellaneous—◆ Maximum No. of Busy Extension
- 11.5.3 PBX Configuration—[3-5-3] Group—Incoming Call Distribution Group—Miscellaneous
- 11.7.1 PBX Configuration—[3-7-1] Group—UM Group—System Settings—◆ Call Waiting on UM Group
- 12.1.4 PBX Configuration—[4-1-4] Extension—Wired Extension—Flexible Button
  - ◆ Type
  - ◆ Extension Number (for Hurry-up)
- 12.2.3 PBX Configuration—[4-2-3] Extension—Portable Station—Flexible Button
  - ◆ Type
  - ◆ Extension Number (for Hurry-up)

Feature Guide References
2.2.2.4 Queuing Feature

Quick Dialling

- 10.6.2 PBX Configuration—[2-6-2] System—Numbering Plan—Quick Dial

Feature Guide References
2.6.5 Quick Dialling

Reverse Circuit

- 9.24 PBX Configuration—[1-1] Configuration—Slot—Port Property - LCO Port—◆ Reverse Detection

Feature Guide References
2.5.4.5 Reverse Circuit

Ring Tone Pattern Selection

- 10.8.1 PBX Configuration—[2-8-1] System—Ring Tone Patterns—Call from CO—◆ Ring Tone Pattern Plan 1–8
- 10.8.2 PBX Configuration—[2-8-2] System—Ring Tone Patterns—Call from DOORPHONE—◆ Ring Tone Pattern Plan 1–8
- 10.8.3 PBX Configuration—[2-8-3] System—Ring Tone Patterns—Call from Others—◆ Extension—Ring Tone Pattern Plan 1–8
- 10.9 PBX Configuration—[2-9] System—System Options—Option 1—◆ PT Operation—PT Ring Off Setting
- 12.1.1 PBX Configuration—[4-1-1] Extension—Wired Extension—Extension Settings—Option 1—◆ Ring Pattern Table
- 12.2.1 PBX Configuration—[4-2-1] Extension—Portable Station—Extension Settings—Option 1—◆ Ring Pattern Table

Feature Guide References
2.1.3.2 Ring Tone Pattern Selection

Room Status Control

- 12.1.4 PBX Configuration—[4-1-4] Extension—Wired Extension—Flexible Button—◆ Type
- 14.2 PBX Configuration—[6-2] Feature—Hotel & Charge
  - Main—◆ Hotel Operator—Extension 1–4
  - Bill—◆ Checkout Billing—Billing for Guest

Feature Guide References
2.23.2 Room Status Control

Simple Network Management Protocol (SNMP) System Monitor

- 27.3.3 Network Service—[3-3] Client Feature—SNMP Agent

Feature Guide References
5.6.5 Simple Network Management Protocol (SNMP) System Monitor

Simple Remote Connection

- 9.2.1 PBX Configuration—[1-1] Configuration—Slot—System Property—Main—SIP Extension
  - ◆ Setting parameters assigned to Remote SIP-MLT—NAT - CWMP Server IP Address
  - ◆ Setting parameters assigned to Remote SIP-MLT—NAT - CWMP Server (HTTP) Port No.
  - ◆ Setting parameters assigned to Remote SIP-MLT—NAT - SIP-MLT Data Download Server (HTTP) Port No.
  - ◆ Setting parameters assigned to Remote SIP-MLT—NAT - SIP Proxy Server IP Address
  - ◆ Setting parameters assigned to Remote SIP-MLT—NAT - SIP Proxy Server Port No.
  - ◆ Setting parameters assigned to Remote SIP-MLT—NAT - NTP Server IP Address
  - ◆ Setting parameters assigned to Remote SIP-MLT—NAT - NTP Server Port No.
  - ◆ Setting parameters assigned to Remote SIP-MLT—NAT - Keep Alive Packet Type
  - ◆ Setting parameters assigned to Remote SIP-MLT—NAT - Keep Alive Packet Sending Interval Time (s)
  - ◆ Setting parameters assigned to Remote SIP-MLT—NAT - SIP Register Expire Time (s)
  - ◆ Setting parameters for Networking Survivability, assigned to Remote SIP-MLT—NAT - CWMP Server IP Address
  - ◆ Setting parameters for Networking Survivability, assigned to Remote SIP-MLT—NAT - CWMP Server (HTTP) Port No.
  - ◆ Control Condition of Remote SIP-MLT—PERIODIC Ability
  - ◆ Control Condition of Remote SIP-MLT—PERIODIC Packet Sending Interval Time (s)
- 9.2.1 PBX Configuration—[1-1] Configuration—Slot—System Property—Main—Media Relay
  - ◆ Common—NAT - External IP Address
  - ◆ IP Extension—NAT - MGCP Server Port No.
  - ◆ IP Extension—Keep Alive Packet Type
  - ◆ IP Extension—Keep Alive Packet Sending Interval Time (s)
  - ◆ SIP Extension / UT Extension—NAT - SIP Proxy Server Port No.
  - ◆ UT Extension—NAT - CWMP Server (HTTP) Port No.
  - ◆ UT Extension—NAT - CWMP Server (HTTP) Port No. for Network Survivability
  - ◆ UT Extension—NAT - SIP-MLT Data Download Server (HTTP) Port No.
  - ◆ UT Extension—NAT - NTP Server Port No.
  - ◆ UT Extension—Keep Alive Packet Type
  - ◆ UT Extension—Keep Alive Packet Sending Interval Time (s)

  - ◆ UT Extension—SIP Register Expire Time (s)
  - ◆ UT Extension—PERIODIC Ability
  - ◆ UT Extension—PERIODIC Packet Sending Interval Time (s)
  - ◆ Option—NAT - RTP IP Address
  - ◆ Option—NAT - SIP Proxy Server IP Address
  - ◆ Option—NAT - CWMP Server IP Address
  - ◆ Option—NAT - CWMP Server IP Address for Network Survivability
  - ◆ Option—NAT - NTP Server IP Address
- 9.14 PBX Configuration—[1-1] Configuration—Slot—V-IPEXT—Port Property—Remote Place
- 9.16 PBX Configuration—[1-1] Configuration—Slot—V-SIPEXT—Port Property—Remote Place
- 9.20 PBX Configuration—[1-1] Configuration—Slot—V-UTEXT—Port Property—Remote Place

Feature Guide References
5.2.2.1 Simple Remote Connection

SIP (Session Initiation Protocol) Extension

- 9.15 PBX Configuration—[1-1] Configuration—Slot—V-SIPEXT—Card Property
- 9.16 PBX Configuration—[1-1] Configuration—Slot—V-SIPEXT—Port Property

Feature Guide References
5.2.2 SIP (Session Initiation Protocol) Extension

SIP (Session Initiation Protocol) Trunk

- 9.8 PBX Configuration—[1-1] Configuration—Slot—V-SIPGW—Shelf Property
- 9.9 PBX Configuration—[1-1] Configuration—Slot—V-SIPGW—Card Property
- 9.10 PBX Configuration—[1-1] Configuration—Slot—V-SIPGW—Port Property

Feature Guide References
4.1.1 SIP (Session Initiation Protocol) Trunk

SIP Refer Transfer

- 9.10 PBX Configuration—[1-1] Configuration—Slot—V-SIPGW—Port Property—Supplementary Service
  - ◆ Blind Transfer(REFER)
  - ◆ Attended Transfer(REFER)

Feature Guide References
2.12.2 SIP Refer Transfer

Software Upgrading

- 5.1 System Control—Program Update

Feature Guide References
5.5.9 Software Upgrading

Special Carrier Access Code

- 15.3 PBX Configuration—[7-3] TRS—Special Carrier

Feature Guide References
2.5.4.9 Special Carrier Access Code

Speed Dialling—Personal/System

- 10.6.1 PBX Configuration—[2-6-1] System—Numbering Plan—Main—Features
  - ◆ System Speed Dialling / Personal Speed Dialling
  - ◆ Personal Speed Dialling - Programming
- 10.7.1 PBX Configuration—[2-7-1] System—Class of Service—COS Settings—TRS—◆ TRS Level for System Speed Dialling
- 12.1.3 PBX Configuration—[4-1-3] Extension—Wired Extension—Speed Dial
- 14.1 PBX Configuration—[6-1] Feature—System Speed Dial
- 14.6 PBX Configuration—[6-6] Feature—Tenant
  - ◆ Extension Directory
  - ◆ System Speed Dial

Feature Guide References
2.6.4 Speed Dialling—Personal/System

Station Message Detail Recording (SMDR)

- 10.3 PBX Configuration—[2-3] System—Timers & Counters—Dial / IRNA / Recall / Tone—◆ Dial—Analogue CO Call Duration Start (s)
- 10.7.1 PBX Configuration—[2-7-1] System—Class of Service—COS Settings—CO & SMDR—◆ Outgoing CO Call Printout (SMDR)
- 14.2 PBX Configuration—[6-2] Feature—Hotel & Charge
  - Main—◆ SMDR for External Hotel Application 2—Printing Message 1–8
  - Charge—◆ Charge Options—Currency
- 19.1 PBX Configuration—[11-1] Maintenance—Main
  - SMDR
  - SMDR Options

Feature Guide References
2.22.1.1 Station Message Detail Recording (SMDR)

Supervisory Feature

- 10.6.1 PBX Configuration—[2-6-1] System—Numbering Plan—Main—Features—◆ Incoming Call Queue Monitor
- 11.5.1 PBX Configuration—[3-5-1] Group—Incoming Call Distribution Group—Group Settings—Miscellaneous—◆ Supervisor Extension Number

Feature Guide References
2.2.2.8 Supervisory Feature

Supervisory Feature (ACD)

- 8.4 Users—ICDG Management
- 11.5.3 PBX Configuration—[3-5-3] Group—Incoming Call Distribution Group—Miscellaneous
- 11.5.4 PBX Configuration–[3-5-4] Group—Incoming Call Distribution Group—ACD Supervisor

Feature Guide References
2.2.2.9 Supervisory Feature (ACD)

Syslog Record Management

- 27.3.2 Network Service—[3-2] Client Feature—Syslog

Feature Guide References
2.22.1.2 Syslog Record Management

Tenant Service

- 10.2 PBX Configuration—[2-2] System—Operator & BGM
  - ◆ PBX Operator—Day, Lunch, Break, Night
  - ◆ BGM and Music on Hold—Music on Hold
- 10.4 PBX Configuration—[2-4] System—Week Table
- 10.5 PBX Configuration—[2-5] System—Holiday Table
- 10.7.3 PBX Configuration—[2-7-3] System—Class of Service—Internal Call Block
- 11.2 PBX Configuration—[3-2] Group—User Group
- 11.5.1 PBX Configuration—[3-5-1] Group—Incoming Call Distribution Group—Group Settings—Main—◆ Tenant Number
- 12.1.1 PBX Configuration—[4-1-1] Extension—Wired Extension—Extension Settings—Main—◆ User Group
- 12.2.1 PBX Configuration—[4-2-1] Extension—Portable Station—Extension Settings—Main—◆ User Group
- 13.1 PBX Configuration—[5-1] Optional Device—Doorphone—◆ Tenant Number
- 13.5 PBX Configuration—[5-5] Optional Device—External Sensor—◆ Tenant No.
- 14.6 PBX Configuration—[6-6] Feature—Tenant
- Section 16 PBX Configuration—[8] ARS
- 16.5 PBX Configuration—[8-5] ARS—Carrier—Authorisation Code for Tenant
- 18.2 PBX Configuration—[10-2] CO & Incoming Call—DIL Table & Port Settings—DIL—◆ Tenant Number
- 18.3 PBX Configuration—[10-3] CO & Incoming Call—DDI / DID Table—◆ Tenant Number

Feature Guide References
5.1.3 Tenant Service

Three-party Conference (3PTY)—by ISDN

- 9.26 PBX Configuration—[1-1] Configuration—Slot—Port Property - PRI Port—Supplementary Service—◆ COLP, CLIR, COLR, CNIP, CONP, CNIR, CONR, CF (Rerouting), CT, CCBS, AOC-D, AOC-E, E911, 3PTY

Feature Guide References
4.1.2.7 Three-party Conference (3PTY)—by ISDN

TIE Line Service

- 9.26 PBX Configuration—[1-1] Configuration—Slot—Port Property - PRI Port—Network Numbering Plan—◆ Trunk Property
- 10.3 PBX Configuration—[2-3] System—Timers & Counters—Miscellaneous—◆ Incoming Call Inter-digit Timer—TIE (s)
- 10.6.1 PBX Configuration—[2-6-1] System—Numbering Plan—Main—Features
  - ◆ Idle Line Access (Local Access)
  - ◆ Trunk Group Access
  - ◆ TIE Line Access
- 10.6.1 PBX Configuration—[2-6-1] System—Numbering Plan—Main—Other PBX Extension
- 10.7.1 PBX Configuration—[2-7-1] System—Class of Service—COS Settings—TRS—◆ TRS Level—Day, Lunch, Break, Night
- 10.9 PBX Configuration—[2-9] System—System Options—Option 4—◆ Private Network—TIE Call by Extension Numbering
- 11.1.1 PBX Configuration—[3-1-1] Group—Trunk Group—TRG Settings—Main—◆ COS

- 17.1 PBX Configuration—[9-1] Private Network—TIE Table
- 18.2 PBX Configuration—[10-2] CO & Incoming Call—DIL Table & Port Settings
  - DIL—◆ Trunk Property
  - DIL—◆ DIL Destination—Day, Lunch, Break, Night
  - DDI/DID/TIE
- 18.3 PBX Configuration—[10-3] CO & Incoming Call—DDI / DID Table—◆ DDI / DID Destination—Day, Lunch, Break, Night

Feature Guide References
4.2.1 TIE Line Service

Time Service

- 10.4 PBX Configuration—[2-4] System—Week Table
- 10.5 PBX Configuration—[2-5] System—Holiday Table
- 10.6.1 PBX Configuration—[2-6-1] System—Numbering Plan—Main—Features—◆ Time Service (Day / Lunch / Break / Night) Switch
- 10.7.1 PBX Configuration—[2-7-1] System—Class of Service—COS Settings—Manager—◆ Time Service Switch
- 12.1.4 PBX Configuration—[4-1-4] Extension—Wired Extension—Flexible Button
  - ◆ Type
  - ◆ Parameter Selection (for Time Service)
  - ◆ Parameter Selection (for Time Service - Automatic/Manual)
  - ◆ Optional Parameter (Ringing Tone Type Number) (for Time Service)
- 12.2.3 PBX Configuration—[4-2-3] Extension—Portable Station—Flexible Button
  - ◆ Type
  - ◆ Parameter Selection (for Time Service)
  - ◆ Parameter Selection (for Time Service - Automatic/Manual)
  - ◆ Optional Parameter (or Ringing Tone Type Number) (for Time Service)

Feature Guide References
5.1.4 Time Service

Timed Reminder

- 10.3 PBX Configuration—[2-3] System—Timers & Counters—DISA / Door / Reminder / U. Conf
  - ◆ Timed Reminder—Repeat Counter
  - ◆ Timed Reminder—Interval Time (x10s)
  - ◆ Timed Reminder—Alarm Ringing Duration (x10s)
- 10.6.1 PBX Configuration—[2-6-1] System—Numbering Plan—Main—Features
  - ◆ Remote Timed Reminder (Remote Wakeup Call)
  - ◆ Timed Reminder Set / Cancel
- 10.8.3 PBX Configuration—[2-8-3] System—Ring Tone Patterns—Call from Others—◆ Timed Reminder—Ring Tone Pattern Plan 1–8
- 10.9 PBX Configuration—[2-9] System—System Options—Option 1—◆ PT LCD—Time Display
- 13.3.1 PBX Configuration—[5-3-1] Optional Device—Voice Message—DISA System—◆ Timed Reminder Message—Day, Lunch, Break, Night
- 14.2 PBX Configuration—[6-2] Feature—Hotel & Charge—Main—◆ SMDR for External Hotel Application 1—Timed Reminder (Wake-up Call)
- 14.2 PBX Configuration—[6-2] Feature—Hotel & Charge—Main—◆ Timed Reminder Message for SIP-MLT / Standard SIP Phone—Message
- 19.1 PBX Configuration—[11-1] Maintenance—Main—SMDR—◆ Print Information—Timed Reminder (Wake-up Call)

Feature Guide References
2.24.4 Timed Reminder

Toll Restriction (TRS)/Call Barring (Barring)

- 10.7.1 PBX Configuration—[2-7-1] System—Class of Service—COS Settings—TRS
  - ◆ TRS Level—Day, Lunch, Break, Night
  - ◆ TRS Level for System Speed Dialling
- 12.1.1 PBX Configuration—[4-1-1] Extension—Wired Extension—Extension Settings—Main—◆ COS
- 12.1.4 PBX Configuration—[4-1-4] Extension—Wired Extension—Flexible Button
  - ◆ Type
  - ◆ Parameter Selection (for TRS Level Change)
- 12.2.1 PBX Configuration—[4-2-1] Extension—Portable Station—Extension Settings—Main—◆ COS
- 12.2.3 PBX Configuration—[4-2-3] Extension—Portable Station—Flexible Button
  - ◆ Type
  - ◆ Parameter Selection (for TRS Level Change)
- 15.1 PBX Configuration—[7-1] TRS—Denied Code
- 15.2 PBX Configuration—[7-2] TRS—Exception Code
- 15.3 PBX Configuration—[7-3] TRS—Special Carrier
- 15.5 PBX Configuration—[7-5] TRS—Miscellaneous

Feature Guide References
2.7.1 Toll Restriction (TRS)/Call Barring (Barring)

Trunk Access

- 9.22 PBX Configuration—[1-1] Configuration—Slot—Extension—Port Property—◆ Connection
- 9.24 PBX Configuration—[1-1] Configuration—Slot—Port Property - LCO Port—◆ Connection
- 9.26 PBX Configuration—[1-1] Configuration—Slot—Port Property - PRI Port—◆ Connection
- 10.6.1 PBX Configuration—[2-6-1] System—Numbering Plan—Main—Features
  - ◆ Idle Line Access (Local Access)
  - ◆ Trunk Group Access
  - ◆ Single CO Line Access
- 10.7.2 PBX Configuration—[2-7-2] System—Class of Service—External Call Block
- 11.1.1 PBX Configuration—[3-1-1] Group—Trunk Group—TRG Settings—Main—◆ Line Hunting Order
- 11.1.2 PBX Configuration—[3-1-2] Group—Trunk Group—Local Access Priority
- 12.1.4 PBX Configuration—[4-1-4] Extension—Wired Extension—Flexible Button
  - ◆ Type
  - ◆ Parameter Selection (for Single CO)
  - ◆ Parameter Selection (for Group CO)
- 12.2.3 PBX Configuration—[4-2-3] Extension—Portable Station—Flexible Button
  - ◆ Type
  - ◆ Parameter Selection (for Single CO)
  - ◆ Parameter Selection (for Group CO)
- 16.1 PBX Configuration—[8-1] ARS—System Setting—◆ ARS Mode
- 18.1 PBX Configuration—[10-1] CO & Incoming Call—CO Line Settings—◆ CO Name

Feature Guide References
2.5.5.3 Trunk Access

Trunk Adaptor Connection

- 9.10 PBX Configuration—[1-1] Configuration—Slot—V-SIPGW—Port Property
  - Trunk Adaptor
  - ◆ Connection Attribute
  - ◆ Channel Attribute
- 9.12 PBX Configuration—[1-1] Configuration—Slot—V-IPGW—Port Property
  - Trunk Adaptor
  - ◆ Connection Attribute

Feature Guide References
5.3.1 Trunk Adaptor Connection

Trunk Answer From Any Station (TAFAS)

- 10.6.1 PBX Configuration—[2-6-1] System—Numbering Plan—Main—Features—◆ TAFAS Answer
- 10.11.1 PBX Configuration—[2-11-1] System—Audio Gain—Paging/MOH
  - ◆ Paging—EPG 1-6 (External Pager 1-6)
- 13.2 PBX Configuration—[5-2] Optional Device—External Pager

Feature Guide References
2.17.2 Trunk Answer From Any Station (TAFAS)

Trunk Busy Out

- 9.24 PBX Configuration—[1-1] Configuration—Slot—Port Property - LCO Port—◆ Busy Out Status
- 10.6.1 PBX Configuration—[2-6-1] System—Numbering Plan—Main—Features—◆ Busy Out Cancel
- 10.7.1 PBX Configuration—[2-7-1] System—Class of Service—COS Settings—Manager—◆ Manager
- 10.9 PBX Configuration—[2-9] System—System Options—Option 4—◆ Busy Out—Busy Out for Analogue CO

Feature Guide References
2.5.4.6 Trunk Busy Out

Trunk Call Limitation

- 10.7.1 PBX Configuration—[2-7-1] System—Class of Service—COS Settings—CO & SMDR—◆ Extension-CO Line Call Duration Limit
- 10.9 PBX Configuration—[2-9] System—System Options—Option 2—◆ Extension - CO Call Limitation—For Incoming Call
- 11.1.1 PBX Configuration—[3-1-1] Group—Trunk Group—TRG Settings—Main
  - ◆ CO-CO Duration Time (*60s)
  - ◆ Extension-CO Duration Time (*60s)
- 15.5 PBX Configuration—[7-5] TRS—Miscellaneous—◆ Dial Digits Limitation After Answering—Dial Digits

Feature Guide References
2.11.8 Trunk Call Limitation

Unified Messaging—Alternate Extension Group

- 23.2 UM Configuration—[4-2] Service Settings—Parameters—◆ Alternate Extension

Feature Guide References
3.2.1.1 Alternate Extension Group

Unified Messaging—Auto Forwarding

- 20.1.2 UM Configuration—[1-2] Mailbox Settings—Full Setting—External MSG Delivery/Auto FWD/ Personal Custom Serv
  - ◆ Auto Forwarding Active
  - ◆ Auto Forwarding Mailbox Number
  - ◆ Auto Forwarding Delay Time
  - ◆ Auto Forwarding Message Type Urgent
  - ◆ Auto Forwarding Mode
  - ◆ Auto Forwarding Expires

Feature Guide References
3.2.1.2 Auto Forwarding

Unified Messaging—Auto Receipt

- 21.1 UM Configuration—[2] Class of Service—Mailbox—◆ Auto Receipt

Feature Guide References
3.2.2.1 Auto Receipt

Unified Messaging—Automated Attendant (AA)

- 23.2 UM Configuration—[4-2] Service Settings—Parameters
  - ◆ Wait Time for First Digit (0-20 s)
  - ◆ Menu Repeat Cycle (1-5 times)
  - ◆ Play Owner's Name during Transfer
  - ◆ Operator Service
  - ◆ Operator Service—Operator's Extension
  - ◆ Operator Service—Operator's Mailbox
  - ◆ Operator Service—Busy Coverage Mode
  - ◆ Operator Service—No Answer Coverage Mode
  - ◆ Operator Service—Operator No Answer Time (10-60 s)
  - ◆ Call Hold Mode
  - ◆ Call Hold Mode—Call Queuing Announcement Mode
  - ◆ Call Hold Mode—Call Retrieval Announcement Timing (1-30 s)
  - ◆ Alternate Extension
  - ◆ List All Names
  - ◆ Operator Transfer Mode

Feature Guide References
3.2.1.3 Automated Attendant (AA)

Unified Messaging—Automatic Login

- 20.1.2 UM Configuration—[1-2] Mailbox Settings—Full Setting—Remote Call/Automatic Login/Direct Service
  - ◆ Auto Login Extension
  - ◆ Auto Login Extension Password Entry Requirement
  - ◆ Auto Login Caller ID 1, 2
  - ◆ Auto Login Caller ID Password Entry Requirement
  - ◆ Auto Login DDI/DID
  - ◆ Auto Login TRG No.
  - ◆ Auto Login DDI/DID, TRG No. Password Entry Requirement

– ◆ Auto Login Toll Saver

Feature Guide References
3.2.2.2 Automatic Login

Unified Messaging—Automatic Two-way Recording for Manager

- 7.10.3 Utility—Automatic Two-way Recording—Extension Setting List
  - ◆ Internal Call
  - ◆ External Call
  - ◆ Supervisor
  - ◆ Mailbox Number

Feature Guide References
3.2.1.4 Automatic Two-way Recording for Manager

Unified Messaging—Call Services

- 22.1 UM Configuration—[3-1] UM Extension / Trunk Service—Service Group
  - ◆ Day, Night, Lunch, and Break Mode - Incoming Call Service
  - ◆ Day, Night, Lunch, and Break Mode - Incoming Call Service Parameter
  - ◆ Day, Night, Lunch, and Break Mode - Incoming Call Service Prompt

Feature Guide References
3.2.1.6 Call Services

Unified Messaging—Call Transfer Scenario

- 8.1.1 Users—User Profiles—Advanced setting
  - Advanced Call Transfer Setting
  - Scenario Setting

Feature Guide References
3.2.2.6 Call Transfer Scenario

Unified Messaging—Call Transfer Status

- 20.1.2 UM Configuration—[1-2] Mailbox Settings—Full Setting—Mailbox Parameters—◆ Call Transfer Status

Feature Guide References
3.2.2.7 Call Transfer Status

Unified Messaging—Call Transfer to Outside

- 21.1 UM Configuration—[2] Class of Service—Call Transfer—◆ Call Transfer to Outside
- 24.4 UM Configuration—[5-4] System Parameters—Parameters—Transfer to Outside

Feature Guide References
3.2.1.7 Call Transfer to Outside

Unified Messaging—Callback Number Entry

- 20.1.2 UM Configuration—[1-2] Mailbox Settings—Full Setting—Notification Parameters—◆ Telephone Device—Device No. 1, 2, 3—Dial Number [0-9 * # T X , ;]

- 24.4 UM Configuration—[5-4] System Parameters—Parameters—Dialling Parameters/MSW Notification—◆ Message Waiting Notification—System Callback No. (Up to 32 digits)

Feature Guide References
3.2.2.8 Callback Number Entry

Unified Messaging—Caller ID Call Routing

- 23.1 UM Configuration—[4-1] Service Settings—Caller ID / PIN Call Routing

Feature Guide References
3.2.1.8 Caller ID Call Routing

Unified Messaging—Caller ID Callback

- 21.1 UM Configuration—[2] Class of Service—Mailbox—◆ Caller ID Callback
- 24.4 UM Configuration—[5-4] System Parameters—Parameters—Transfer to Outside—◆ Trunk Group (1–64)—Caller ID Callback

Feature Guide References
3.2.2.9 Caller ID Callback

Unified Messaging—Caller ID Screening

- 21.1 UM Configuration—[2] Class of Service—Call Transfer—◆ Caller ID Screen

Feature Guide References
3.2.1.9 Caller ID Screening

Unified Messaging—Caller Name Announcement

- 21.1 UM Configuration—[2] Class of Service—Mailbox—◆ Number of CIDs for Caller Name Announcement (Selection)
- 24.3 UM Configuration—[5-3] System Parameters—System Caller Name Announcement

Feature Guide References
3.2.1.10 Caller Name Announcement

Unified Messaging—Call-through Service

- 21.1 UM Configuration—[2] Class of Service—General—◆ Call-through Service
- 24.4 UM Configuration—[5-4] System Parameters—Parameters—Transfer to Outside—◆ Outside Transfer Sequence—Call Transfer to Outside Sequence (Up to 16 digits / [0-9 * # D F R T , ; N])

Feature Guide References
3.2.2.5 Call-through Service

Unified Messaging—Company Greeting

- 22.1 UM Configuration—[3-1] UM Extension / Trunk Service—Service Group
  - ◆ Day, Night, Lunch, and Break Mode - Company Greeting No. (Selection)
  - ◆ Day, Night, Lunch, and Break Mode - Company Greeting No. (Other)
- 24.4 UM Configuration—[5-4] System Parameters—Parameters—Daily Hours Setting

Feature Guide References
3.2.1.12 Company Greeting

Unified Messaging—Covering Extension

- 20.1.2 UM Configuration—[1-2] Mailbox Settings—Full Setting—Mailbox Parameters—◆ Covering Extension

Feature Guide References
3.2.1.14 Covering Extension

Unified Messaging—Custom Service

- 23.3 UM Configuration—[4-3] Service Settings—Custom Service

Feature Guide References
3.2.1.15 Custom Service

Unified Messaging—Custom Service Builder

- 23.3 UM Configuration—[4-3] Service Settings—Custom Service—Custom Service Builder

Feature Guide References
3.1.2.2 Custom Service Builder

Unified Messaging—Default Mailbox Template

- 20.1.2 UM Configuration—[1-2] Mailbox Settings—Full Setting—Adding Mailboxes

Feature Guide References
3.1.2.3 Default Mailbox Template

Unified Messaging—Dialling by Name

- 20.1.2 UM Configuration—[1-2] Mailbox Settings—Full Setting—Mailbox Parameters
  - ◆ First Name
  - ◆ Last Name
- 21.1 UM Configuration—[2] Class of Service—General—◆ Directory Listing

Feature Guide References
3.2.1.16 Dialling by Name

Unified Messaging—Direct Service Access

- 20.1.2 UM Configuration—[1-2] Mailbox Settings—Full Setting—Remote Call/Automatic Login/Direct Service—◆ Direct Service UM Extension

Feature Guide References
3.2.2.11 Direct Service Access

Unified Messaging—Extension Group

- 24.2 UM Configuration—[5-2] System Parameters—Extension Group

Feature Guide References
3.2.1.18 Extension Group

Unified Messaging—External Message Delivery Service

- 20.1.2 UM Configuration—[1-2] Mailbox Settings—Full Setting—External MSG Delivery/Auto FWD/Personal Custom Serv

  - ◆ External Message Delivery Active
  - ◆ External Message Delivery Prompt Mode
- 20.1.2 UM Configuration—[1-2] Mailbox Settings—Full Setting—Mailbox Parameters—◆ Extension
- 24.4 UM Configuration—[5-4] System Parameters—Parameters—External Message Delivery

Feature Guide References
3.2.2.12 External Message Delivery Service

Unified Messaging—Group Distribution Lists

- 20.1.2 UM Configuration—[1-2] Mailbox Settings—Full Setting—Personal Distribution List
- 24.1 UM Configuration—[5-1] System Parameters—Mailbox Group

Feature Guide References
3.2.2.14 Group Distribution Lists

Unified Messaging—Hold

- 23.1 UM Configuration—[4-1] Service Settings—Caller ID / PIN Call Routing—23.2 UM Configuration—[4-2] Service Settings—Parameters
  - ◆ Operator Service—Busy Coverage Mode
  - ◆ Call Hold Mode
  - ◆ Call Hold Mode—Call Queuing Announcement Mode
  - ◆ Call Hold Mode—Call Retrieval Announcement Timing (1-30 s)

Feature Guide References
3.2.1.19 Hold

Unified Messaging—Holiday Service

- 10.5 PBX Configuration—[2-5] System—Holiday Table
- 10.9 PBX Configuration—[2-9] System—System Options—Option 9
- 23.4 UM Configuration—[4-4] Service Settings—Holiday Table

Feature Guide References
3.1.1 Unified Messaging System Overview
3.2.1.20 Holiday Service

Unified Messaging—Hospitality Mode

- 21.1 UM Configuration—[2] Class of Service—Hospitality Mode

Feature Guide References
3.2.1.21 Hospitality Mode

Unified Messaging—IMAP Integration

- 20.1.2 UM Configuration—[1-2] Mailbox Settings—Full Setting—Mailbox Parameters—◆ Mailbox Password (Message Client)
- 21.1 UM Configuration—[2] Class of Service—General
  - ◆ Desktop Messaging

Feature Guide References
3.3.1 IMAP Integration

Unified Messaging—Incomplete Call Handling Service

- 20.1.2 UM Configuration—[1-2] Mailbox Settings—Full Setting—Mailbox Parameters
  - ◆ Incomplete Call Handling for No Answer
  - ◆ Incomplete Call Handling for Busy

Feature Guide References
3.2.2.15 Incomplete Call Handling Service

Unified Messaging—Intercept Routing to a Mailbox

- 11.7.1 PBX Configuration—[3-7-1] Group—UM Group—System Settings—◆ Intercept to Mailbox for Call to Extension

Feature Guide References
3.2.1.22 Intercept Routing to a Mailbox

Unified Messaging—Intercom Paging

- 21.1 UM Configuration—[2] Class of Service—Call Transfer
  - ◆ Intercom Paging Group
- 24.4 UM Configuration—[5-4] System Parameters—Parameters—Intercom Paging Parameters

Feature Guide References
3.2.1.23 Intercom Paging

Unified Messaging—Interview Service

- 20.1.2 UM Configuration—[1-2] Mailbox Settings—Full Setting—Mailbox Parameters—◆ Interview Mailbox

Feature Guide References
3.2.1.24 Interview Service

Unified Messaging—List All Names

- 21.1 UM Configuration—[2] Class of Service—General—◆ Directory Listing

Feature Guide References
3.2.1.25 List All Names

Unified Messaging—Live Call Screening (LCS)

- 10.8.3 PBX Configuration—[2-8-3] System—Ring Tone Patterns—Call from Others—◆ Live Call Screening—Ring Tone Pattern Plan 1–8
- 12.1.1 PBX Configuration—[4-1-1] Extension—Wired Extension—Extension Settings—Option 4
  - ◆ LCS Recording Mode
  - ◆ LCS Answer Mode
- 12.2.1 PBX Configuration—[4-2-1] Extension—Portable Station—Extension Settings—Option 4—◆ LCS Recording Mode
- 21.1 UM Configuration—[2] Class of Service—Mailbox—◆ Message Cancel for Live Call Screening

Feature Guide References
3.2.2.16 Live Call Screening (LCS)

Unified Messaging—Logical Extension (All Calls Transfer to Mailbox)

- 20.1.2 UM Configuration—[1-2] Mailbox Settings—Full Setting—Mailbox Parameters—◆ All Calls Transfer to Mailbox

Feature Guide References
3.2.1.26 Logical Extension (All Calls Transfer to Mailbox)

Unified Messaging—Mailbox

- 7.5.3 Utility—Report—UM View Reports
- 20.1 UM Configuration—[1] Mailbox Settings

Feature Guide References
3.2.2.17 Mailbox

Unified Messaging—Manager Service Switching

- 21.1 UM Configuration—[2] Class of Service—General
  - ◆ System Manager Authority
  - ◆ Message Manager Authority

Feature Guide References
3.2.2.19 Manager Service Switching

Unified Messaging—Message Reception Mode

- 20.1.2 UM Configuration—[1-2] Mailbox Settings—Full Setting—Mailbox Parameters—◆ All Calls Transfer to Mailbox

Feature Guide References
3.2.1.27 Message Reception Mode

Unified Messaging—Message Transfer

- 21.1 UM Configuration—[2] Class of Service—Mailbox—◆ Announce Message Transferred Information

Feature Guide References
3.2.2.20 Message Transfer

Unified Messaging—Message Waiting Notification—E-mail Device

- 7.5.3 Utility—Report—UM View Reports
- 20.1.2 UM Configuration—[1-2] Mailbox Settings—Full Setting—Notification Parameters
  - ◆ E-mail/Text Message Device—Device No. 1, 2, 3—User Name
  - ◆ E-mail/Text Message Device—Device No. 1, 2, 3—E-mail Address
  - ◆ E-mail/Text Message Device—Device No. 1, 2, 3—Only Urgent Messages
  - ◆ E-mail/Text Message Device—Device No. 1, 2, 3—Title Order
  - ◆ E-mail/Text Message Device—Device No. 1, 2, 3—Title String
  - ◆ E-mail/Text Message Device—Device No. 1, 2, 3—Callback Number
  - ◆ E-mail/Text Message Device—Device No. 1, 2, 3—Send Wait Time [0-120 min]
  - ◆ E-mail/Text Message Device—Device No. 1, 2, 3—Attach Voice File
  - ◆ E-mail/Text Message Device—Device No. 1, 2, 3—Use Mode
- 21.1 UM Configuration—[2] Class of Service—General
  - ◆ E-mail Option
- 24.4 UM Configuration—[5-4] System Parameters—Parameters—E-mail Option

Feature Guide References
3.2.1.28 Message Waiting Notification—E-mail Device

Unified Messaging—Message Waiting Notification—Lamp

- 20.1.2 UM Configuration—[1-2] Mailbox Settings—Full Setting—Notification Parameters—◆ Message Waiting Lamp

Feature Guide References
3.2.1.29 Message Waiting Notification—Lamp

Unified Messaging—Message Waiting Notification—Telephone Device

- 20.1.2 UM Configuration—[1-2] Mailbox Settings—Full Setting—Notification Parameters
  - ◆ Telephone Device—Device No. 1, 2, 3—Only Urgent Messages
  - ◆ Telephone Device—Device No. 1, 2, 3—Dial Number [0-9 * # T X , ;]
  - ◆ Telephone Device—Device No. 1, 2, 3—No. of Retries
  - ◆ Telephone Device—Device No. 1, 2, 3—Busy Delay Time (min)
  - ◆ Telephone Device—Device No. 1, 2, 3—No Answer Delay Time (min)
  - ◆ Telephone Device—Device No. 1, 2, 3—Use Mode
  - ◆ Telephone Device—Device Notification Timer—Device Start Delay Time (0-120 min)
  - ◆ Telephone Device—Device Notification Timer—Device Interval Time between Device 1, 2, 3 and Next Device
- 24.4 UM Configuration—[5-4] System Parameters—Parameters—Dialling Parameters/MSW Notification

Feature Guide References
3.2.1.30 Message Waiting Notification—Telephone Device

Unified Messaging—Multilingual Service

- 24.4 UM Configuration—[5-4] System Parameters—Parameters—Prompt Setting

Feature Guide References
3.2.1.31 Multilingual Service

Unified Messaging—No DTMF Input Operation

- 20.1.2 UM Configuration—[1-2] Mailbox Settings—Full Setting—External MSG Delivery/Auto FWD/ Personal Custom Serv
  - ◆ No DTMF Input Operation
  - ◆ No DTMF Input Operation Wait Time

Feature Guide References
3.2.1.32 No DTMF Input Operation

Unified Messaging—On Hold Announcement Menu

- 7.9 Utility—UM – System Prompts Customisation

Feature Guide References
3.2.1.33 On Hold Announcement Menu

Unified Messaging—Operator Service

- 23.1 UM Configuration—[4-1] Service Settings—Caller ID / PIN Call Routing—23.2 UM Configuration—[4-2] Service Settings—Parameters
  - ◆ Operator Service
  - ◆ Operator Service—Operator's Extension
  - ◆ Operator Service—Operator's Mailbox
  - ◆ Operator Service—Busy Coverage Mode
  - ◆ Operator Service—No Answer Coverage Mode
  - ◆ Operator Service—Operator No Answer Time (10-60 s)

Feature Guide References
3.2.1.34 Operator Service

Unified Messaging—Password Administration

- 20.1.2 UM Configuration—[1-2] Mailbox Settings—Full Setting—Mailbox Parameters
  - ◆ Mailbox Password
  - ◆ Mailbox Password (Message Client)

Feature Guide References
3.1.2.4 Password Administration

Unified Messaging—Personal Custom Service

- 20.1.2 UM Configuration—[1-2] Mailbox Settings—Full Setting—External MSG Delivery/Auto FWD/ Personal Custom Serv—◆ Personal Custom Service

Feature Guide References
3.2.2.21 Personal Custom Service

Unified Messaging—Personal Greetings

- 21.1 UM Configuration—[2] Class of Service—Mailbox
  - ◆ Personal Greeting Length (s)
  - ◆ Personal Greeting for Caller ID

Feature Guide References
3.2.2.22 Personal Greetings

Unified Messaging—PIN Call Routing

- 23.1 UM Configuration—[4-1] Service Settings—Caller ID / PIN Call Routing
  - ◆ PIN No.
  - ◆ Description
  - ◆ Call Transfer for Day, Night, Lunch, and Break service

Feature Guide References
3.2.1.35 PIN Call Routing

Unified Messaging—Play System Prompt After Personal Greeting

- 21.1 UM Configuration—[2] Class of Service—Mailbox—◆ Play System Prompt after Personal Greeting

Feature Guide References
3.2.1.36 Play System Prompt After Personal Greeting

Unified Messaging—Port Service

- Section 22 UM Configuration—[3] UM Extension / Trunk Service

Feature Guide References
3.2.1.37 Port Service

Unified Messaging—Remote Call Forwarding Set

- 20.1.2 UM Configuration—[1-2] Mailbox Settings—Full Setting—Remote Call/Automatic Login/Direct Service—◆ Remote Call Telephone Number 1, 2

Feature Guide References
3.2.2.26 Remote Call Forwarding Set

Unified Messaging—Subscriber Tutorial

- 21.1 UM Configuration—[2] Class of Service—General—◆ Tutorial

Feature Guide References
3.2.2.27 Subscriber Tutorial

Unified Messaging—System Backup/Restore

- 6.8 Tool—UM Data Backup
- 6.9 Tool—UM Data Restore
- 6.10 Tool—UM Backup History

Feature Guide References
3.1.2.5 System Backup/Restore

Unified Messaging—System Prompts

- 7.9 Utility—UM – System Prompts Customisation
- 21.1 UM Configuration—[2] Class of Service—General—◆ Prompt Mode
- 24.4 UM Configuration—[5-4] System Parameters—Parameters—Prompt Setting

Feature Guide References
3.2.1.41 System Prompts

Unified Messaging—System Reports

- 7.5.3 Utility—Report—UM View Reports

Feature Guide References
3.1.2.6 System Reports

Unified Messaging—System Security

- 26.1 UM Configuration—[7] System Security

Feature Guide References
3.1.2.7 System Security

Unified Messaging—Toll Saver

- 20.1.2 UM Configuration—[1-2] Mailbox Settings—Full Setting—Remote Call/Automatic Login/Direct Service

  - ◆ Auto Login Extension
  - ◆ Auto Login Extension Password Entry Requirement
  - ◆ Auto Login Caller ID 1, 2
  - ◆ Auto Login Caller ID Password Entry Requirement
  - ◆ Auto Login DDI/DID
  - ◆ Auto Login TRG No.
  - ◆ Auto Login DDI/DID, TRG No. Password Entry Requirement
  - ◆ Auto Login Toll Saver
- 23.1 UM Configuration—[4-1] Service Settings—Caller ID / PIN Call Routing—23.2 UM Configuration—[4-2] Service Settings—Parameters
  - ◆ Delayed Answer Time for New Message (5-60 s)
  - ◆ Delayed Answer Time for No New Message (5-60 s)

Feature Guide References
3.2.2.29 Toll Saver

Unified Messaging—Transfer Recall to a Mailbox

- 10.3 PBX Configuration—[2-3] System—Timers & Counters—Dial / IRNA / Recall / Tone—◆ Recall—Transfer Recall (s)
- 11.7.1 PBX Configuration—[3-7-1] Group—UM Group—System Settings—◆ Transfer Recall to Mailbox

Feature Guide References
3.2.1.42 Transfer Recall to a Mailbox

Unified Messaging—Trunk Service (Universal Port)

- 22.1 UM Configuration—[3-1] UM Extension / Trunk Service—Service Group

Feature Guide References
3.2.1.44 Trunk Service (Universal Port)

Unified Messaging—Two-way Record/Two-way Transfer

- 12.1.1 PBX Configuration—[4-1-1] Extension—Wired Extension—Extension Settings—◆ Two-way Recording
- 12.1.4 PBX Configuration—[4-1-4] Extension—Wired Extension—Flexible Button
  - ◆ Extension Number (for Two-way Record)
  - ◆ Extension Number (for Two-way Transfer)
  - ◆ Extension Number (for Voice Mail Transfer)
- 12.2.1 PBX Configuration—[4-2-1] Extension—Portable Station—Extension Settings—◆ Two-way Recording
- 12.2.3 PBX Configuration—[4-2-3] Extension—Portable Station—Flexible Button
  - ◆ Extension Number (for Two-way Record)
  - ◆ Extension Number (for Two-way Transfer)
  - ◆ Extension Number (for Voice Mail Transfer)
- 21.1 UM Configuration—[2] Class of Service—Mailbox—◆ Two-way Recorded Message Save Mode

Feature Guide References
3.2.2.30 Two-way Record/Two-way Transfer

Unified Messaging—Urgent Message

- 20.1.2 UM Configuration—[1-2] Mailbox Settings—Full Setting—Notification Parameters

  - ◆ Telephone Device—Device No. 1, 2, 3—Only Urgent Messages
  - ◆ E-mail/Text Message Device—Device No. 1, 2, 3—Only Urgent Messages
- 20.1.2 UM Configuration—[1-2] Mailbox Settings—Full Setting—External MSG Delivery/Auto FWD/ Personal Custom Serv—◆ Auto Forwarding Message Type Urgent
- 20.1.2 UM Configuration—[1-2] Mailbox Settings—Full Setting—Announce Number of Messages
  - ◆ Subscriber Service - New Urgent Messages
  - ◆ Receiving Message Service - New Urgent Messages
- 21.1 UM Configuration—[2] Class of Service—Mailbox—◆ First Playback Urgent Message

Feature Guide References
3.2.2.31 Urgent Message

Unified Messaging—Voice Mail (VM) Transfer Button

- 12.1.4 PBX Configuration—[4-1-4] Extension—Wired Extension—Flexible Button—◆ Extension Number (for Voice Mail Transfer)
- 12.2.3 PBX Configuration—[4-2-3] Extension—Portable Station—Flexible Button—◆ Extension Number (for Voice Mail Transfer)

Feature Guide References
3.2.2.32 Voice Mail (VM) Transfer Button

Unified Messaging—Voice Mail Service

- 22.1 UM Configuration—[3-1] UM Extension / Trunk Service—Service Group

Feature Guide References
3.2.1.45 Voice Mail Service

Unified Messaging—Web Programming

- 20.1 UM Configuration—[1] Mailbox Settings
- 22.1 UM Configuration—[3-1] UM Extension / Trunk Service—Service Group—◆ Day, Night, Lunch, and Break Mode - Incoming Call Service Prompt
- 24.4 UM Configuration—[5-4] System Parameters—Parameters—Prompt Setting

Feature Guide References
3.2.2.33 Web Programming

User Profiles

- Section 8 Users
- Section 12 PBX Configuration—[4] Extension
- Section 20 UM Configuration—[1] Mailbox Settings

Feature Guide References
5.5.1 User Profiles

Verification Code Entry

- 10.3 PBX Configuration—[2-3] System—Timers & Counters—Miscellaneous—◆ Extension PIN—Lock Counter
- 10.6.1 PBX Configuration—[2-6-1] System—Numbering Plan—Main—Features—◆ User Remote Operation / Walking COS / Verification Code
- 12.1.1 PBX Configuration—[4-1-1] Extension—Wired Extension—Extension Settings
  - Option 1—◆ ARS Itemised Code

  - Option 3—◆ Charge Limit
- 12.2.1 PBX Configuration—[4-2-1] Extension—Portable Station—Extension Settings
  - Option 1—◆ ARS Itemised Code
  - Option 3—◆ Charge Limit
- 14.3 PBX Configuration—[6-3] Feature—Verification Code

Feature Guide References
2.7.6 Verification Code Entry

VIP Call

- 11.5.1 PBX Configuration—[3-5-1] Group—Incoming Call Distribution Group—Group Settings—Miscellaneous—◆ VIP Call Mode

Feature Guide References
2.2.2.5 VIP Call

Virtual PS

- 9.34 PBX Configuration—[1-2] Configuration—Portable Station—◆ Registration

Feature Guide References
5.2.4.1 Virtual PS

Voice Mail (VM) Group

- 9.22 PBX Configuration—[1-1] Configuration—Slot—Extension—Port Property—◆ DPT Type—Type
- 9.22 PBX Configuration—[1-1] Configuration—Slot—Extension—Port Property—◆ DPT Type—VM Unit No.
- 9.22 PBX Configuration—[1-1] Configuration—Slot—Extension—Port Property—◆ DPT Type—VM Port No.
- 11.11.1 PBX Configuration—[3-11-1] Group—VM(DPT) Group—System Settings
- 11.11.2 PBX Configuration—[3-11-2] Group—VM(DPT) Group—Unit Settings
- 11.12.1 PBX Configuration—[3-12-1] Group—VM(DTMF) Group—System Settings
- 11.12.2 PBX Configuration—[3-12-2] Group—VM(DTMF) Group—Group Settings
- 11.7.1 PBX Configuration—[3-7-1] Group—UM Group—System Settings
- 11.7.2 PBX Configuration—[3-7-2] Group—UM Group—Unit Settings

Feature Guide References
2.28.1 Voice Mail (VM) Group
3.1.1 Unified Messaging System Overview—UM Ports and the UM Group

Voice Mail DPT (Digital) Integration

- 10.3 PBX Configuration—[2-3] System—Timers & Counters—◆ Recall—Transfer Recall (s)
- 11.11.1 PBX Configuration—[3-11-1] Group—VM(DPT) Group—System Settings
- 11.11.2 PBX Configuration—[3-11-2] Group—VM(DPT) Group—Unit Settings
- 12.1.1 PBX Configuration—[4-1-1] Extension—Wired Extension—Extension Settings—Option 4
  - ◆ LCS Recording Mode
  - ◆ LCS Answer Mode
- 12.1.4 PBX Configuration—[4-1-4] Extension—Wired Extension—Flexible Button
  - ◆ Type
  - ◆ Extension Number (for Two-way Record)
  - ◆ Extension Number (for Two-way Transfer)

  - ◆ Extension Number (for Voice Mail Transfer)
  - ◆ Ext No. of Mailbox (for Two-way Transfer)
- 12.2.1 PBX Configuration—[4-2-1] Extension—Portable Station—Extension Settings—Option 4—◆ LCS Recording Mode
- 12.2.3 PBX Configuration—[4-2-3] Extension—Portable Station—Flexible Button
  - ◆ Type
  - ◆ Extension Number (for Two-way Record)
  - ◆ Extension Number (for Two-way Transfer)
  - ◆ Extension Number (for Voice Mail Transfer)
  - ◆ Ext No. of Mailbox (for Two-way Transfer)
- 12.3 PBX Configuration—[4-3] Extension—DSS Console
  - ◆ Type
  - ◆ Extension Number (for Two-way Record)
  - ◆ Extension Number (for Two-way Transfer)
  - ◆ Extension Number (for Voice Mail Transfer)
  - ◆ Ext No. of Mailbox (for Two-way Transfer)
- 13.1 PBX Configuration—[5-1] Optional Device—Doorphone—◆ VM Trunk Group No.
- 18.2 PBX Configuration—[10-2] CO & Incoming Call—DIL Table & Port Settings—DIL
  - ◆ Tenant Number
  - ◆ VM Trunk Group No.
- 18.3 PBX Configuration—[10-3] CO & Incoming Call—DDI / DID Table
  - ◆ Tenant Number
  - ◆ VM Trunk Group No.

Feature Guide References
2.28.3 Voice Mail DPT (Digital) Integration

Voice Mail DTMF Integration

- 10.3 PBX Configuration—[2-3] System—Timers & Counters—Miscellaneous—◆ Voice Mail (Caller from VM to CO)—On-hook Wait Time (s)
- 11.5.1 PBX Configuration—[3-5-1] Group—Incoming Call Distribution Group—Group Settings—Miscellaneous—◆ Programmed Mailbox No. (16 Digits)
- 11.12.1 PBX Configuration—[3-12-1] Group—VM(DTMF) Group—System Settings
- 11.12.2 PBX Configuration—[3-12-2] Group—VM(DTMF) Group—Group Settings
- 12.1.1 PBX Configuration—[4-1-1] Extension—Wired Extension—Extension Settings—Option 1—◆ Programmed Mailbox No.
- 12.1.4 PBX Configuration—[4-1-4] Extension—Wired Extension—Flexible Button
  - ◆ Type
  - ◆ Extension Number (for Voice Mail Transfer)
- 12.2.1 PBX Configuration—[4-2-1] Extension—Portable Station—Extension Settings—Option 1—◆ Programmed Mailbox No.
- 12.2.3 PBX Configuration—[4-2-3] Extension—Portable Station—Flexible Button
  - ◆ Type
  - ◆ Extension Number (for Voice Mail Transfer)
- 12.3 PBX Configuration—[4-3] Extension—DSS Console
  - ◆ Type
  - ◆ Extension Number (for Voice Mail Transfer)

Feature Guide References
2.28.2 Voice Mail DTMF Integration

Voice Mail Integration

- 10.3 PBX Configuration—[2-3] System—Timers & Counters—Dial / IRNA / Recall / Tone—◆ Recall—Transfer Recall (s)
- 11.7.1 PBX Configuration—[3-7-1] Group—UM Group—System Settings
- 11.7.2 PBX Configuration—[3-7-2] Group—UM Group—Unit Settings
- 12.1.1 PBX Configuration—[4-1-1] Extension—Wired Extension—Extension Settings—Option 4
  - ◆ LCS Recording Mode
  - ◆ LCS Answer Mode
- 12.1.4 PBX Configuration—[4-1-4] Extension—Wired Extension—Flexible Button
  - ◆ Type
  - ◆ Extension Number (for Two-way Record)
  - ◆ Extension Number (for Two-way Transfer)
  - ◆ Extension Number (for Voice Mail Transfer)
  - ◆ Ext No. of Mailbox (for Two-way Transfer)
- 12.2.1 PBX Configuration—[4-2-1] Extension—Portable Station—Extension Settings—Option 4—◆ LCS Recording Mode
- 12.2.3 PBX Configuration—[4-2-3] Extension—Portable Station—Flexible Button
  - ◆ Type
  - ◆ Extension Number (for Two-way Record)
  - ◆ Extension Number (for Two-way Transfer)
  - ◆ Extension Number (for Voice Mail Transfer)
  - ◆ Ext No. of Mailbox (for Two-way Transfer)
- 12.3 PBX Configuration—[4-3] Extension—DSS Console
  - ◆ Type
  - ◆ Extension Number (for Two-way Record)
  - ◆ Extension Number (for Two-way Transfer)
  - ◆ Extension Number (for Voice Mail Transfer)
  - ◆ Ext No. of Mailbox (for Two-way Transfer)
- 13.1 PBX Configuration—[5-1] Optional Device—Doorphone—◆ Service Group Number
- 18.2 PBX Configuration—[10-2] CO & Incoming Call—DIL Table & Port Settings—DIL
  - ◆ Tenant Number
  - ◆ UM Service Group No.
- 18.3 PBX Configuration—[10-3] CO & Incoming Call—DDI / DID Table
  - ◆ Tenant Number
  - ◆ UM Service Group No.

Feature Guide References
3.1.1 Unified Messaging System Overview

Voice over Internet Protocol (VoIP) Network

- 27.1 Network Service—[1] IP Address/Ports—Basic Settings—◆ DSP IP Setting—DSP Card-1/DSP Card-2—IP Address

Feature Guide References
4.2.2 Voice over Internet Protocol (VoIP) Network

Walking COS

- 10.6.1 PBX Configuration—[2-6-1] System—Numbering Plan—Main—Features—◆ User Remote Operation / Walking COS / Verification Code

- 10.7.1 PBX Configuration—[2-7-1] System—Class of Service—COS Settings—Optional Device & Other Extensions—◆ Remote Operation by Other Extension
- 12.1.1 PBX Configuration—[4-1-1] Extension—Wired Extension—Extension Settings—Main—◆ Extension PIN
- 12.2.1 PBX Configuration—[4-2-1] Extension—Portable Station—Extension Settings—Main—◆ Extension PIN

Feature Guide References
2.7.5 Walking COS

Walking Extension Features

- 10.6.1 PBX Configuration—[2-6-1] System—Numbering Plan—Main—Features—◆ Walking Extension
- 12.1.1 PBX Configuration—[4-1-1] Extension—Wired Extension—Extension Settings—Main—◆ Extension PIN

Feature Guide References
2.24.3 Walking Extension Features

Whisper OHCA

- 9.14 PBX Configuration—[1-1] Configuration—Slot—V-IPEXT—Port Property—Option—◆ IP Codec Priority
- 10.6.3 PBX Configuration—[2-6-3] System—Numbering Plan—B/NA DND Call Feature
  - ◆ BSS / OHCA / Whisper OHCA / DND Override
  - ◆ BSS / OHCA / Whisper OHCA / DND Override-2
- 10.7.1 PBX Configuration—[2-7-1] System—Class of Service—COS Settings—Assistant—◆ OHCA / Whisper OHCA
- 10.9 PBX Configuration—[2-9] System—System Options—Option 5—◆ Whisper OHCA—for SLT

Feature Guide References
2.10.4.4 Whisper OHCA

Panasonic System Networks Co., Ltd.
1-62, 4-chome, Minoshima, Hakata-ku, Fukuoka 812-8531, Japan
Web Site: http://www.panasonic.net/

Copyright:
This material is copyrighted by Panasonic System Networks Co., Ltd., and may be reproduced for internal use only. All other reproduction, in whole or in part, is prohibited without the written consent of Panasonic System Networks Co., Ltd.

© Panasonic System Networks Co., Ltd. 2014

PNQX7105ZA DD0814AH0